INSTRUCTION MANUAL

SERIES 1260 VXI SWITCHING CARDS

RACAL-DANA

Racal Instruments
Racal Instruments Series 1260
VXI Switching System
WIN System Framework
Disk 2 of 2
To install: In the Program Manager from the File menu select the Run option. Enter [drive]:\setup.exe. Press enter. Follow the instructions from the installation program.
Driver Revision Beta 1.1
WIN FW Revision 3.0
© Copyright 1994-1995 Racal Instruments, Inc. All rights reserved.
Racal Instruments
(714)859-8999, (800)722-3262
RACAL
3M
High Density
Haute densité
IBM
Formatted • Formatted
1.44 MB
Racal Instruments
3M
High Density

PUBLICATION NO. 980673

SERIES 1260 VXI SWITCHING CARDS

RACAL-DANA

RACAL-DANA INSTRUMENTS INC.

4 Goodyear Street, P.O. Box C-19541, Irvine, CA 92713
Telephone: 714/859-8999, Fax: 714/859-2505

RACAL INSTRUMENTS, LTD.

480 Bath Road, Slough, Berkshire, SL1 6BE, England
Telephone: 44-628 604455, Fax: 44-628 662017

RACAL SYSTEMS ELECTRONIQUE S.A.

18 Avenue Dutartre, 78150 Le Chesnay, France
Telephone: 33-1-3-955-8888, Fax: 33-1-3-955-6735

RACAL ELEKTRONIK SYSTEMS GmbH

Frankenforster Strasse 21, D-5060 Bergisch-Gladbach 1, Federal Republic of Germany
Telephone: 49-22-04-60081, Fax: 49-22-04-21491

RACAL SYSTEMS ELETTRONICA

Via Roma, 108/PAL, E1, 20060 Cassina de Pecchi, Milan, Italy
Telephone: 39-2-9514717/737/770, Fax: 39-2-9514522

RACAL

PUBLICATION DATE: SEPTEMBER 1992

© Copyright 1992 by Racal-Dana Instruments, Inc. Printed in the United States of America. All rights reserved. This book or parts thereof may not be reproduced in any form without written permission of the publishers.

WARRANTY STATEMENT

Items sold by Racal-Dana Instruments Inc. are warranted only as stated below:
Subject to the exceptions and upon the conditions specified below, Racal-Dana agrees to correct, either by repair, or, at its election, by replacement, any defects of material or workmanship which develop within one year after delivery of the instrument to the original purchaser by Racal-Dana or by an authorized representative, provided that investigation and factory inspection by Racal-Dana discloses that such defect developed under normal and proper use.

The exceptions and conditions mentioned above are the following:

a.) ***Some components and accessories by their nature are not intended to, and will not, function one year. If any such component or accessory manufactured by Racal-Dana and part of the item sold fails to give reasonable service for a reasonable period of time, Racal-Dana will, at its election, replace or repair such component or accessory. What constitutes reasonable service and what constitutes a reasonable period of time shall be determined solely by Racal-Dana after Racal-Dana is in possession of all the facts concerning operating conditions and other pertinent factors and after such component or accessory has been returned to Racal-Dana, transportation prepaid.***

b.) ***All items claimed defective must be returned to Racal-Dana, transportation changes prepaid, and will be returned to the customer with the transportation charges collect unless the item is found to be defective in which case Racal-Dana will pay the return transportation charges.***

c.) ***Racal-Dana makes no warranty concerning components or accessories not manufactured by it. However, in the event of the failure of any component or accessory not manufactured by Racal-Dana, Racal-Dana will give reasonable assistance to the purchaser in obtaining from the respective manufacturer whatever adjustment is reasonable in the light of the manufacture's own warranty.***

d.) ***Racal-Dana shall be released from all obligations under its warranty in the event repairs or modifications are made by persons other than its own authorized service personnel unless such repairs by others are made with the written consent of Racal-Dana, or unless such repair is minor or merely the installation of a new Racal-Dana plug-in component.***

Except as stated above, Racal-Dana makes no warranty, express or implied (either in fact or by operation of law), statutory or otherwise; and except to the extent stated above, Racal-Dana shall have no liability under any warranty, express or implied (either in fact or by operation of law), statutory or otherwise.

Racal-Dana expressly disclaims any liability to its customers, dealers and representatives, and to users of its products, and to any other person or persons for special or consequential damages for any kind and from any cause whatsoever arising out of or in any way connected with the manufacture, sale, handling, repair, maintenance or replacement or arising out of or in any way connected with the use of said products.

Representations and warranties made by any person, including dealers and representatives of Racal-Dana, which are inconsistent or in conflict with the terms of this warranty (including but not limited to the limitations of the liability of Racal-Dana as set forth above), shall not be binding upon Racal-Dana unless reduced to writing and approved by an officer of Racal-Dana.

PROPRIETARY NOTICE

This document and the technical data herein disclosed, are proprietary to Racal-Dana Instruments, Inc., and shall not, without express written permission of Racal-Dana Instruments, Inc., be used, in whole or in part to solicit quotations from a competitive source or used for manufacture by anyone other than Racal-Dana Instruments, Inc. The information herein has been developed at private expense, and may only be used for operation and maintenance reference purposes or for purposes of engineering evaluation and incorporation into technical specifications and other documents which specify procurement of products from Racal-Dana Instruments, Inc.

FOR YOUR SAFETY

Before undertaking any troubleshooting, maintenance or exploratory procedure, read carefully the **WARNING** and **CAUTION** notices.

This equipment contains voltage hazardous to human life and safety, and is capable of inflicting personal injury.

If this instrument is to be powered from the AC line (mains) through an autotransformer, ensure the common connector is connected to the neutral (earthed pole) of the power supply.

Before operating the unit, ensure the conductor (green wire) is connected to the ground (earth) conductor of the power outlet. Do not use a two-conductor extension cord or a three-prong/two-prong adaptor. This will defeat the protective feature of the third conductor in the power cord.

Maintenance and calibration procedures sometimes call for operation of the unit with power applied and protective covers removed. Read the procedures and heed warnings to avoid "live" circuit points.

Before operating this instrument:

1. Ensure the instrument is configured to operate on the voltage at the power source. See Installation Section.

2. Ensure the proper fuse is in place for the power source to operate.

3. Ensure all other devices connected to or in proximity to this instrument are properly grounded or connected to the protective third-wire earth ground.

If the instrument:

- fails to operate satisfactorily
- shows visible damage
- has been stored under unfavorable conditions
- has sustained stress

Do not operate until performance is checked by qualified personnel.

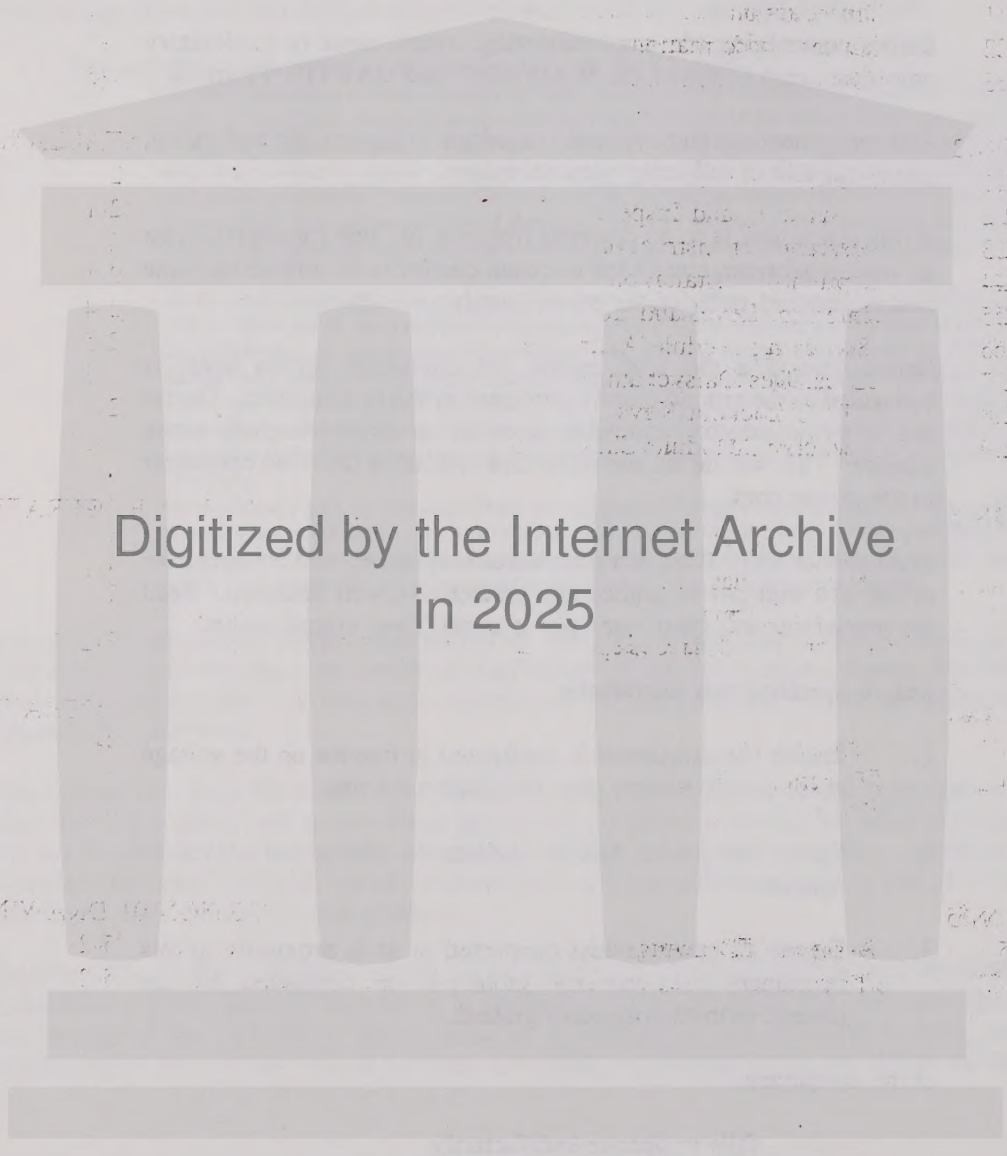

Digitized by the Internet Archive
in 2025

https://archive.org/details/manualsplus_10429

TABLE OF CONTENTS

SECTION 1		GENERAL INFORMATION
1.1	Introduction	1-1
1.2	General Information	1-1
1.3	Options	1-3
SECTION 2		INSTALLATION
2.1	Introduction	2-1
2.2	Unpacking and Inspection	2-1
2.3	Reshipment Instructions	2-1
2.4	Option 01 Installation	2-1
2.5	Interrupt Level and Logical Address	2-4
2.6	Switching Module Address Setting	2-5
2.7	Local Bus Daisychaining	2-7
2.8	LBUS Lockout Keys	2-8
2.9	Switching Module Chassis Installation	2-10
SECTION 3		THEORY OF OPERATION
3.1	Introduction	3-1
3.2	Input Format	3-1
3.3	Output Format	3-1
3.4	Option 01 Device Dependant Command codes	3-2
SECTION 4		OPERATION
4.1	Introduction	4-1
4.2	Functional Blocks	4-1
4.3	Theory of Operation	4-3
SECTION 5		OPTION 01 DRAWINGS
5.1	Assembly Drawings	5-2
5.2	Parts List	5-20

TABLES

3-1	1260 Option 01 Status Byte	3-11
3-2	1260 Series Error Code	3-13

FIGURES

1-1	1260 Series Switch Module	1-1
1-2	1260 Series Smart Card and Slaves	1-2
2-1	1260-01 Smart Card	2-2
2-2	Switching Module Connector/Switch Locations	2-2
2-3	1260-40 Switch, Connector and Jumper Locations	2-3
2-4	S1 Switch Functions	2-5
2-5	1260 Series Master and Slave LBUS Interconnections	2-7
2-6	LBUS Lockout Keys	2-8
2-7	1260 Series Master/Slave Configuration	2-9
4-1	1260 Smart Card Block Diagram	4-2
4-2	1260 Microprocessor Block Diagram	4-2

SECTION 1 GENERAL INFORMATION

1.1 Introduction

1.1.1 This manual provides the information necessary to install one or more of the Racal-Dana 1260 Series switching modules in a VXIbus compatible chassis, and to operate the switching modules correctly.

1.2 General Information

1.2.1 The 1260 switching modules are a range of C size, VXIbus compatible switching modules that provide switching for microwave, RF, audio, high voltage, high current, low level and video applications. The modules are configured as matrices, multiplexers, switching trees, SPDTs and DPDTs. Refer to Figure 1-1 which shows a 1260 Switch Module in a VXIbus chassis.

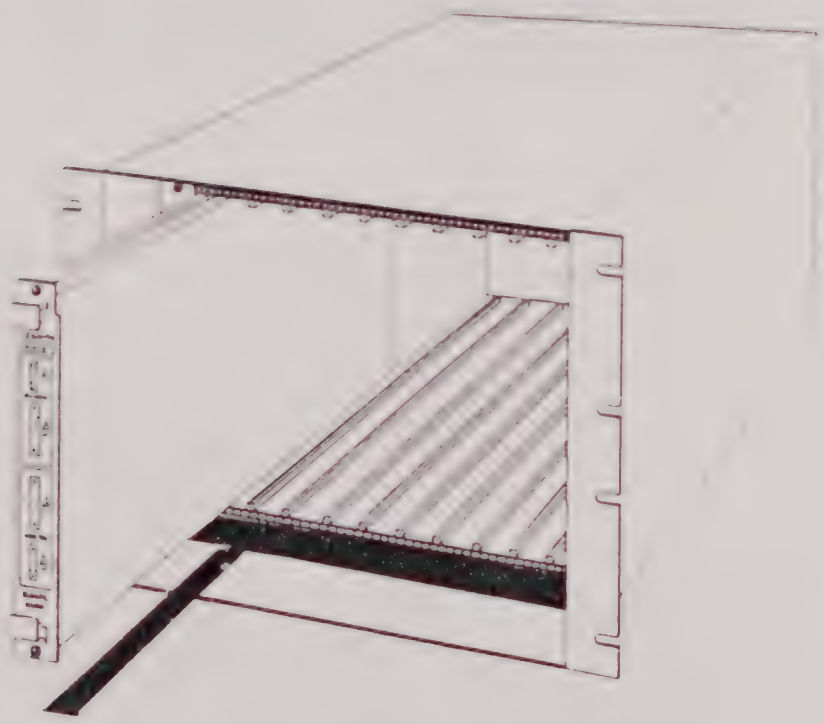

Figure 1-1, 1260 Series Switch Module

1.2.2 The switching modules are installed in a VXIbus compatible chassis in a continuous set of adjacent chassis slots. One of the modules to be fitted to the chassis must be designated the system Master, and must be fitted with Option 01. All other modules are slaved to the master. Refer to Figure 1-2 which shows the smart card and slaves.

1.2.3 The module fitted with Option 01 must be fitted in the leftmost chassis slot that is to contain a switching module. If only one module is to be fitted to the chassis, several jumper wires must be removed from, or DIP switches opened on, the switching module. If more than one module is to be fitted to the chassis, these jumpers must be removed from (or the DIP switches opened) the module in the rightmost chassis position containing a switching module.

1.2.4 Two separate addresses are required in the use of a 1260 switching system. The first is the VXIbus specification defined logical address used by the chassis Resource Manager and the second, the card address, is an address used by the 1260 Master to control the cards slaved to it. The card address is used in the device dependant commands used to control the switching modules. The logical address is set by a DIP switch on the 1260-01 Smart Card, and the card addresses are set by a DIP switch on the switching module PCB.

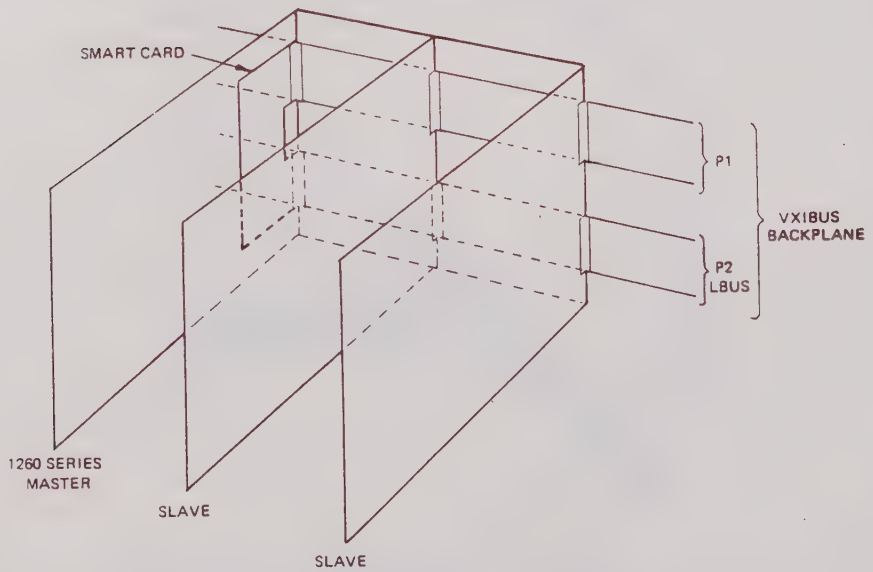

Figure 1-2, 1260 Series Smart card and Slaves

1.3 Options

1.3.1 Option 01

1.3.1.1 The Option 01 Smart Card (Master) is required for use in all 1260 switching systems. This option acts as the switching system master, and all other switching modules are slaved to it. It turns any number of modules into a message-based VXIbus switching system.

1.3.1.2 The smart card is addressed over the VXIbus, and all other modules resident in the VXIbus chassis are controlled by this card. Option 01 uses the local bus on the VXI P2 connector to provide scanning, delay and exclude capabilities.

1.3.1.3 The built-in-test features in the smart card include confidence checking which monitors the state of each relay. It monitors a spare set of contacts in sensing coil current to ensure the switching system configuration is as programmed.

1.3.1.4 Refer to Section 2 for software installation procedures for the 1260-01, and to Section 3 for the software command set used to control the switching modules. The sections on individual modules describe the device specific installation and programming for each module.

SECTION 2 INSTALLATION

2.1 Introduction

2.1.1 This section describes the unpacking and inspection, reshipment, installation and environmental requirements of the 1260 Series switching modules.

2.2 Unpacking and Inspection

2.2.1 Prior to unpacking the switching module, check the exterior of the shipping carton for any signs of damage. All irregularities should be noted on the shipping bill. Remove the instrument from the carton, preserving the factory packaging as much as possible. Inspect the switching module for any defect or damage. Immediately notify the carrier if any damage is apparent. Before use, have qualified personnel perform a safety check.

2.3 Reshipment Instructions

2.3.1 Use the original packaging when returning the switching module to Racal-Dana for calibration or servicing. The shipping carton and packaging will provide the necessary support for safe reshipment. If the original packaging is unavailable, wrap the switching module in plastic sheeting and use plastic spray foam to surround and protect the instrument. Reship in the original or a new shipping carton.

2.4 Option 01 Installation

2.4.1 To install Option 01 to a 1260 switching module, carry out the following procedure.

2.4.1.1 Remove the module top and bottom covers.

2.4.1.2 Remove the jumper board (Racal-Dana P/N 401951) fitted to connector J4 on the switching module. Note the 1260-40 has jumpers installed in the J4 connector that must be removed.

2.4.1.3 Remove the jumper board (Racal-Dana P/N 401951-003) fitted to connector J3 on the switching module.

2.4.1.4 Align the 1260-01 card with the switching module, P3 to J3, P4 to J4, and press the 1260-01 and the module firmly together to mate the P3 and P4 connectors, taking care not to bend or damage any pins on the mating connectors. Refer to Figures 2-2 and 2-3 for the location of J3 and J4. Secure the 1260-01 card to the module with the fasteners provided at the three standoff positions on the 1260-01.

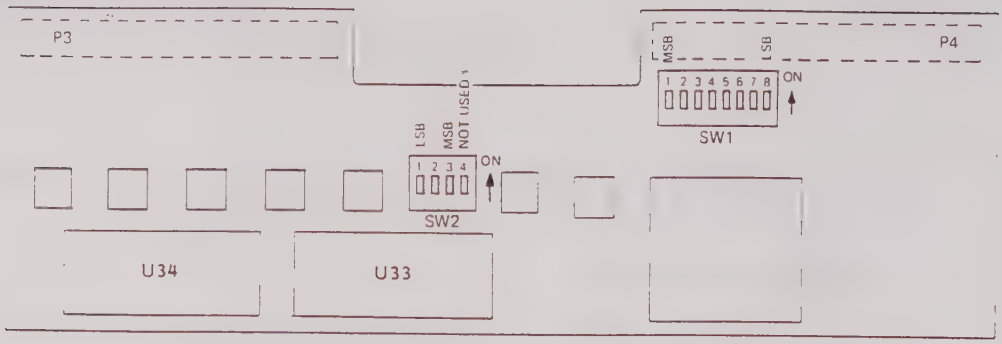

Figure 2-1, 1260-01 Smart card

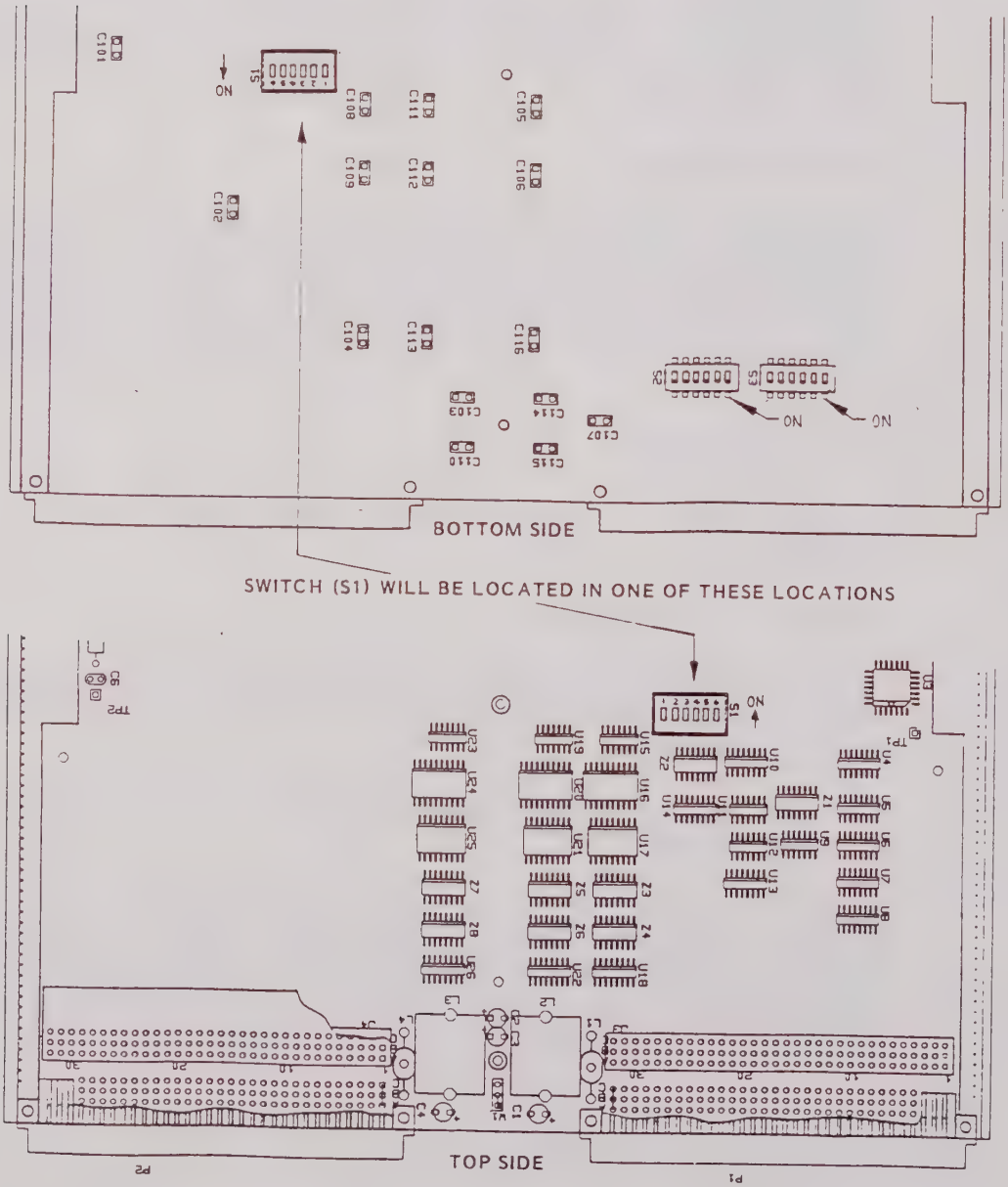

Figure 2-2, Switching Module Connector and Switch Locations

Figure 2-3, 1260-40 Switch, Connector and Jumper Locations

2.4.1.5 The 1260 Master is fitted with the VXIbus defined SYSFAIL LED. To install the LED, connect the cable supplied to the 3-pin plug in the Option 01 PCB. The cable and plug are configured to achieve correct operation either way the cable is connected at the end. The LED is inserted into the hole marked FAIL at the top of the module front panel from the outside of the module so the LED pins point into the module. The cable supplied is fitted with a 2-pin connector at the LED end, and is polarized to ensure correct installation.

2.4.1.6 Proceed to Subsection 2.5 to set the interrupt level and logical address of the Option 01.

2.5 Interrupt Level and Logical Address Setting (1260-01 - Equipped Modules Only)

2.5.1 If not previously done, remove the module's top cover. To set the 1260-01 logical address, set switch SW1 on the 1260-01 board to the binary equivalent of the logical address selected. For SW1, a switch in the OFF position corresponds to binary 1, and the ON position corresponds to binary 0. Switch 1 on SW1 corresponds to the most significant digit, and switch 8 corresponds to the least significant digit. Logical addresses in the range 0 to 255 are permitted. Refer to Figure 2-1 for the location of SW1.

NOTE

The 1260-01 logical address is set to 15 by Racal-Dana before shipment.

2.5.2 All switching modules resident in a VXIbus chassis must have unique addresses. Incorrect operation of the system will result if two or more modules are set to the same module address.

2.5.3 To set the 1260-01 interrupt level, set switches 1, 2 and 3 on SW2 on the 1260-01 board to the binary equivalent of the interrupt level selected. For SW2, a switch in the OFF position corresponds to binary 1, and the ON position corresponds to binary 0. Switch 1 on SW2 corresponds to the least significant bit, and switch 3 corresponds to the most significant bit. Interrupt levels in the range 0 to 7 are permitted. Switch 4 is not used. Refer to Figure 2-1 for the location of SW2.

NOTE

The 1260-01 interrupt level is set to 2 by Racal-Dana before shipment.

2.5.4 Replace the module covers. Replacement is the reverse of the removal procedure.

NOTE

Any 1260 switching card may have Option 01 fitted and be designated as the Master.

2.6 Switching Module Address Setting (All Modules)

2.6.1 To set a module address, carry out the following procedure.

2.6.1.1 For the 1260-40 only, remove the module covers.

2.6.1.2 Set switch SW1 on the module to the binary equivalent of the address. Switches 1 to 4 are used to set the module address, with switch 4 the least significant bit, and switch 1 the most significant. The OFF positions for SW1 correspond to binary 0, and ON positions correspond to binary 1. Addresses in the range 1 to 12 are permitted. Refer to Figure 2-2 for the location of SW1 on the switching module PCB, or to Figure 2-3 for the location of SW1 on the 1260-40. The functions of the various S1 switches are shown in Figure 2-4.

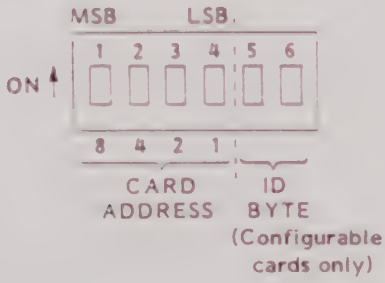

Figure 2-4, S1 Switch Functions

NOTE

The address set at switch SW1 on the switching module controls the value of the card address the switching module will respond to. The OPEN and CLOSE statements using the card address are specified in Section 4.4. Example: For a module to respond to the command CLOSE 5.1205, the address of the module must be set to 5.

2.6.1.3 Several modules are capable of more than one configuration, and respond to different command codes in their various configurations. Switches 5 and 6 on SW1 are used to select the command code sets these modules respond to. Refer to the module specific sections for the procedure to set the switches for each module.

2.6.1.4 For the 1260-40 only, replace the switching module covers. Replacement is the reverse of the removal procedure.

2.7 Local Bus Daisychaining

2.7.1 All modules slaved to a master must be daisychained together along the VXI Local bus to allow communication between the Master and its Slaves. The modules must also be isolated from the rest of the VXI modules on the local bus. The daisychaining of the Master and Slaves is implemented by the LBus Jumper PCBA (Racal-Dana P/N 405951) fitted to connector J4 on the modules and closing the S2 and S3 switches fitted to the underside of the module. The jumper board connects the local bus to the module from the left, and the switches connect the module to the local bus on the right of the module. The module fitted to the rightmost slot used must have all switches open to isolate the 1260 group from the rest of the VXI modules using the local bus. Note the 1260-40 has jumpers in positions E126 - E136 instead of DIP switches. Refer to Figure 2-5 which shows the LBus daisychaining required by a 1260 Master and Slaves.

2.7.2 Similarly, a provision must be made to pass the IACK and BUSGRANT 0-3 signals through Slave modules. This is done by installing the BUSGRANT Bypass PCBA (Racal-Dana P/N 401951-003) onto the modules J3 connector. This PCBA is not required if the VXI chassis backplane contains jumpers or switches to bypass these signals and the switches are CLOSED.

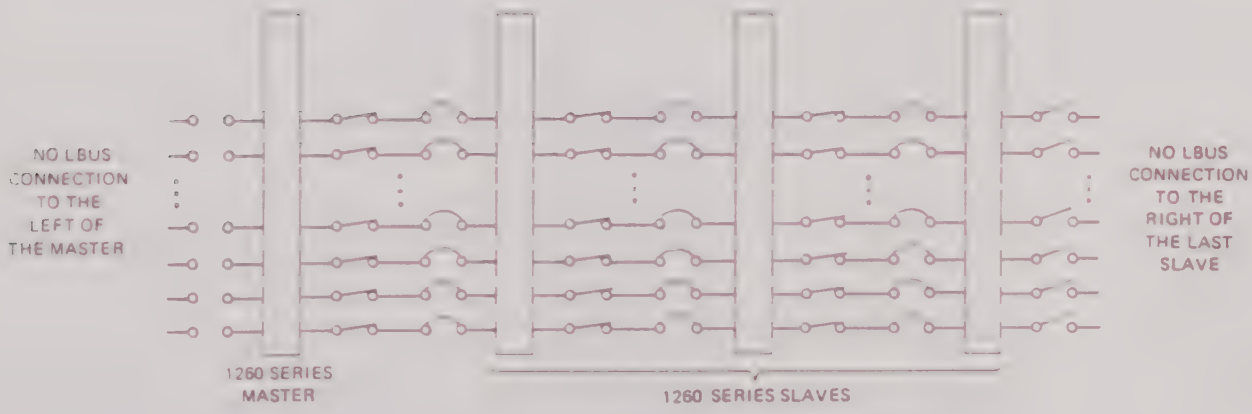

Figure 2-5, 1260 Series Master and Slave LBUS Interconnections

2.8 LBUS Lockout Keys

2.8.1 The VXIbus defined LBUS lockout keys are designed to prevent the connection together of incompatible logic families. They are attached to the exterior of the module at the top of the front panel. Note: The 1260 Master must occupy the leftmost slot in the series. It is not required to occupy the leftmost slot in the chassis.

2.8.2 Note all modules shipped from the factory are supplied with three keys. Because their use is application dependent, it is the users responsibility to configure each module with the correct lockout key unless they are ordered specifying the modules that are to be the leftmost (Master) module, the rightmost module in the group, and the modules between the leftmost and rightmost modules.

2.8.3 Refer to Figure 2-6 which illustrates the three LBUS Lockout keys used, and to Figure 2-7 which shows a 1260 Master/Slave configuration.

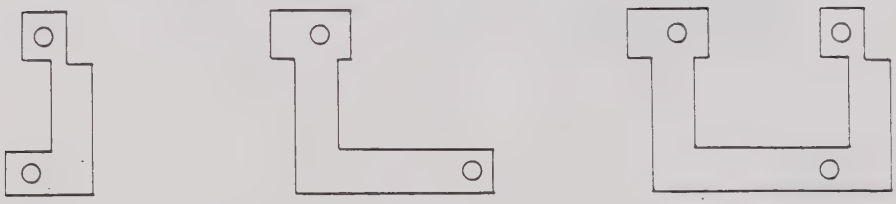

"C" Key **"A" Key** **"A/C" Key**

Figure 2-6, LBUS Lockout Keys

2.8.4 Racal-Dana implements the LBUS lockout scheme in one of three ways for each module as follows:

2.8.4.1 VXIbus Defined "C" Key

The LBUS Lockout key (Racal-Dana P/N 455541) is fitted to the leftmost module in the group, i.e., the 1260 Master. It is connected to the LBUS to the right of the module, and the connection is TTL-compatible.

2.8.4.2 VXIbus Defined "A" Key

The LBUS Lockout key (Racal-Dana P/N 455542) is fitted to the rightmost of the modules installed in a VXIbus chassis. It is connected to the LBUS to the left of the module, and the connection is TTL-compatible.

2.8.4.3 VXIbus Defined "A/C" Key

The BUS Lockout key (Racal-Dana P/N 455540) is fitted to all modules that are not the leftmost or the rightmost module in the group. The module is connected to the LBUS both to the left and to the right, and the connection is TTL-compatible.

2.8.4.4 A special case arises if only one module is to be installed in a VXIbus chassis. This configuration requires the Option 01 be installed, and the LBUS be open circuited to the right of the module. This will not require any use of the LBUS, and no LBUS Lockout keys are required.

2.8.5 Refer to Figure 2-6 which illustrates the three LBUS Lockout keys used, and to Figure 2-7 which shows a 1260 Master/Slave configuration.

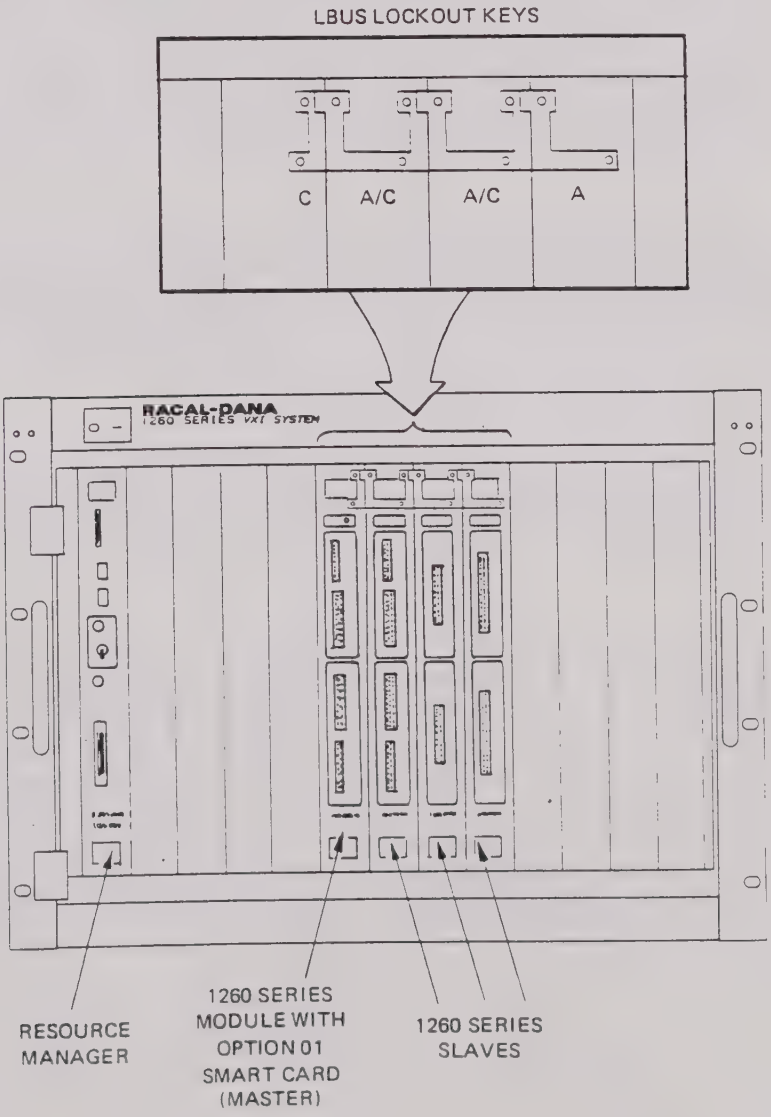

Figure 2-7, 1260 Series Master/Slave Configuration

2.8.6 LBUS Lockout Key Installation

2.8.6.1 In order to accomodate the VXIbus specification defined minimum thickness of the LBUS Lockout keys and the clearance provided around the module ejector handle, two LBUS Lockout keys must be fitted on top of each other to each module.

2.8.6.2 To install the A and C keys on a module, align the screw holes in the Lockout keys with the appropriate holes in the module front panel. Fit the two screws required, and secure the Lockout keys to the module front panel.

2.8.6.3 To install A/C Lockout keys to the module, the module ejector handle must be in the unejected position. The first key may be pushed around the ejector handle and aligned with the front panel screw holes. This takes up most of the clearance under the ejector handle, preventing the second Lockout key from being installed. To provide the necessary clearance, move the first Lockout key away from the module body, and slide the second key underneath the first key and around the ejector handle.

2.8.6.4 To secure the A/C Lockout keys to the module, align the Lockout keys screw holes with the holes in the module front panel. Install two screws in the holes at the top of the module front panel and tighten the screws. Move the ejector handle to the ejected position, and install a third screw in the hole now made accessible.

2.9 Switching Module Chassis Installation

2.9.1 Before installation of the switching module, visually inspect it to ensure there are no bent, damaged or missing pins. Pay particular attention to connectors P1 and P2 on the rear of the module. Repair any damage to the module before proceeding.

2.9.2 Before installing the switching system Master, the VXIbus specification defined IACKIN/IACKOUT, daisychain connection for the chassis slot the Master will be resident in, must be open circuited. This is acomplished in the Racal-Dana Model 1261 or 1262 chassis by opening the switch fitted on the daisychain. (Note: In later revisions of the 1261 and 1262 chassis, open circuiting is accomplished automatically when a module is installed into the chassis. See the appropriate chassis manual for more information.) The switch used is the higher of the two switches on the lower switchbank to the left of the slot the Master is to be fitted to. Note that other vendors may choose to implement the daisychain with either switches or jumpers.

2.9.3 If more than one switching module is to be installed in the VXIbus chassis, the module with the 1260-01 card installed must be fitted at the leftmost position of all modules being installed in the chassis. The rightmost module must have the twelve jumpers mounted on the jumper PCB (installed) removed from positions E125 to E136 on the switching module PCB, or all DIP switches S2 and S3 opened, as described in Section 2.7.

2.9.4 To install the switching module in a C size, VXI mainframe, ensure the module has rear connector P1 oriented to mate with the corresponding connector on the mainframe backplane. Align the module with the guides for the slot selected, and slide the module into the mainframe. Push the module home to connect it to the mainframe. Secure the module to the mainframe with the captive screws provided at the top and bottom edges of the module.

2.9.5 Power up the mainframe. Ensure the SYSFAIL LED on the Master switching module front panel lights and extinguishes after a few seconds to show the switching module has passed its power up self-test. The switching module is now ready for use.

2.9.6 To remove the switching module, release the captive screws that secure the module to the mainframe. Use the plastic levers provided on the top and bottom edges to eject the module. Pull the switching module along the guides provided and out of the mainframe.

SECTION 3 OPERATION

3.1 Introduction

3.1.1 This Section supplies the information necessary to operate 1260 Series switching modules housed in a VXIbus chassis. It describes the command codes and module specific syntax needed to control the 1260 Option 01 and switching modules, and the formats for the character strings output by the switching modules.

3.2 Input Format

3.2.1 The Option 01 is capable of recognizing any of the device dependant commands given in Section 4.4 from the first two characters of the command, with the exception of the READ, RESET and RECALL commands which may be recognized from the first three characters of the command. The Option 01 will interpret a command in the same way if a command string supplies the first two or three or more characters of the command string.

3.2.2 The Option 01 will respond to the following terminators:

line feed

carriage return, line feed

carriage return, line feed with EOI asserted

GPIB line EOI asserted (when used with a GPIB/VXI Resource Manager)

3.3 Output Format

3.3.1 The Option 01 switching module will output character strings in response to the PDATAOUT, PSETUP and YERR commands. These character strings consist of one or more lines of information that will be terminated by the carriage return, line feed pair with the GPIB EOI line asserted as determined by the EOI <011> command. This means the character string output by the Option 01 may be required to be read repeatedly until the final line of the output is read for PDATAOUT and PSETUP commands. The final character string output by the Option 01 is <module address>.END, where <module address> is the address of the last module to be described. The character string output in response to the YERR command is a single line.

3.3.2 The character strings output in response to the PDATAOUT and PSETUP commands consist of multiple lines of the form:

<module address>.<header> or <module address>.<module specific syntax>

where <module address> is the address set on switch SW1 on the switching module PCB, value 1 through 12. The value of <module address> and the decimal equivalent of the binary value set on SW1 must be the same for the switching module to respond correctly to any device dependant commands addressed to it. Note that no two switching modules are permitted to have the same value of <module address> in a VXIbus chassis.

<header> describes the switching module type.

<module specific syntax> describes the closed relay paths of the present configuration of the switching modules, or the syncronous port data on the digital card.

NOTE

The PSETUP command returns information on the configuration of the 1260 Option 01. The Option 01 will return a value of 000 for <module address>. This does not correspond to the address of the VXI Resource Manager card resident in Slot 0 of the VXI chassis, or the Option 01 logical address.

3.3.3 When outputting a character string to the VXI Controller, the Option 01 will output a carriage return, line feed pair. If the Resource Manager is a VXI/GPIB interface, the Resource Manager will output a carriage return, line feed with GPIB EOI asserted. Note that in the case of the output string consisting of multiple lines, the EOI line may be asserted at the end of each line or at the end of the character string, as determined by the EOI <1|0> command.

3.4 1260-01 Device Dependant Command Codes

3.4.1 CLOSE <module address>.<module specific syntax> [;<module address>.<module specific syntax>]....

3.4.1.1 This command causes one or more connections on a switching module to close. Any number of connections in more than one slot may be closed in one CLOSE statement if the <module address>.<module specific syntax> sections are concatenated using a semi-colon (;). Refer to the individual module sections for the <module specific syntax> to be used for each switching module.

3.4.2 CNF <ON|OFF>

3.4.2.1 This command turns the 1260 Confidence Test On or Off. The Confidence Test checks that the state of all relays is as programmed, and causes the Option 01 to assert the VXI Request True exception after each OPEN or CLOSE command is processed if an error is detected. A character string detailing the failure may be obtained from the 1260-01 in response to the YERR command. The character string the Confidence test causes the Option 01 to generate is <module address>.51. <module address> is a three digit number that is the address of the module slaved to the 1260-01. 51 is the error code associated with a Confidence Test failure. A GPIB/VXI Resource Manager will cause the assertion of the GPIB SRQ line in response to the Request True assertion. The default (power-up) state for the Confidence Test is OFF.

3.4.3 DLY <value>

3.4.3.1 Command is used to cause a delay between the last relay closure after a command string is processed, and the SYNC OUT pulse. <value> may be 0-655 ms, and is set to zero at power up.

3.4.4 EOI <0|1>

3.4.4.1 EOI 0 causes the GPIB EOI line to be asserted by the VXI Resource Manager at the end of each line of a multi-line data output by the Option 01 if a VXI/GPIB Resource Manager is in use. EOI 0 is the default (power-up) state.

3.4.4.2 EOI 1 causes the GPIB EOI line to be asserted by the VXI Resource Manager only at the last character of a data string output by the Option 01 if a VXI/GPIB Resource Manager is in use.

3.4.5 EQU <equate list>

3.4.5.1 This command causes any OPEN, CLOSE or TRIG/SCAN commands addressed to any switching module on the <equate list> to be carried out for all modules on the <equate list>. All modules on the list are required to be identical.

3.4.5.2 The <equate list> is made up of the slot numbers of the switching modules that are to be equated separated by a semi-colon (;). Continuous groups of modules may be entered onto the <equate list> by entering the first and last modules to appear on the list joined by a hyphen (-). More than one equate group may be set up in a single EQU statement by separating the equate groups with a comma (,).

Example: EQU 1;3-6,2;9-11

This command will equate slots 1, 3, 4, 5 and 6 as one equate group and slots 2, 9, 10 and 11 as another.

NOTE

All switching modules must be of the same type to be accepted in the same equate list or the Option 01 will generate an error.

NOTE

Use of the EQU command will overwrite all previously entered <equate list>s. An <equate list> of 0 may be used to clear all equate groups.

NOTE

When an <equate list> is entered, all switching modules on the list adopt the state of the first module to appear on the list.

3.4.6 EXCL <exclude list>

3.4.6.1 This command causes the Option 01 to regard the channel closures specified in the <exclude list> as mutually exclusive. A channel is described in the <exclude list> by the slot number of a switching module and module specific syntax to describe the relay closures in a channel. Refer to the individual module sections for the module specific syntax of the various switching modules available. More than one <exclude list> may be specified in an EXCL statement by separating the Exclude groups with the letter E and a semi-colon (E;). Continuous groups of modules may be entered onto the <exclude list> by entering the first and last modules to appear on the list joined by a hyphen (-).

NOTE

Use of the EXCL command will overwrite all previously entered <exclude list>s. An <exclude list> of 0 may be used to clear all exclude groups.

3.4.7 OPEN <module address>.<module specific syntax> [;<module address> .<module specific syntax>].....

3.4.7.1 This command causes one or more connections on a switching module to open. Any number of connections in more than one slot may be opened in one OPEN statement if the <module address>.<module specific syntax> sections are concatenated using a semi-colon (;). Refer to the individual module sections for the <module specific syntax> to be used for each switching module.

3.4.8 PDATAOUT <module address>;<module address>.....

3.4.8.1 This command causes the specified switching modules to output the present state of the relays contained in those modules. An example character string output by the Option 01 response to a "PDATAOUT 0-12" is given below.

```
000. Model 1260 Universal Switch Controller
000. OS Rev 1.2 1260
012 1260-40A 4 x 24 signal matrix
012. 0219
012.END
```

This example shows that a 1260 Controller with an operating system revision level of 1.2 is present at module address 000. There is also a 1260-40A module present at address 012, and row 2 of the switching matrix is connected to column 19.

NOTE

The module address for PDATAOUT and PSETUP commands may specify a range of module addresses by using the syntax <start module address>-<end module address>. The Option 01 will output data for all modules between the starting and ending module addresses that are installed in the 1260.

NOTE

The switching module configuration is described in the same format as is required by the OPEN and CLOSE commands.

NOTE

The address obtained for the 1260 Universal Switch Controller is not the address of the slot 0 Resource Manager or the logical address of the 1260-01. It is equivalent to the module address of a switching module, and is always 000.

NOTE

The character string output by the Option 01 is made up of multiple lines and contains carriage-return, line-feed pairs. These may terminate the output string, and so the PSETUP output string must be read repeatedly until all lines of the output have been read for all modules specified. The final line output by the 1260 Option 01 is <module address>.END where <module address> is the VXI chassis slot that the last 1260 module described is resident.

3.4.9 PSETUP <module address>[;<module address>]....

3.4.9.1 This command causes the Option 01 to output a character string describing the setup of the switching system Option 01 and switching modules. An example of a character string obtained in response to a "PSETUP 0-12" command is given below.

```
000. Model 1260 Universal Switch Controller
000. OS Rev 1.2 1260
000. CNF OFF
000. DLY 0
000. EOI 0
000. EQU
000. EXCL
000. SCAN ON
000. SLIST 0
000. SRQMASK 40
000. SYNC 8
000. TTLTRG 0
000. PUPRCL OFF
012. 1260-40A  4 x 24 Signal Matrix
012. BBM
012.END
```

NOTE

The character string output by the 1260 Option 01 is made up of multiple lines and contains carriage-return, line-feed pairs. These will terminate the output string. The PSETUP output string must be read repeatedly until all lines of the output have been read for all modules specified. The final line output by the Option 01 is <module address>.END where <module address> is the VXI chassis slot that the highest module address present in the VXI chassis.

NOTE

The module address for PDATAOUT and PSETUP commands may specify a range of module addresses by using the syntax <start module address>-<end module address>. The Option 01 will output data for all modules between the starting and ending module addresses that are installed in the 1260.

3.4.10 PUPRCL <ON|OFF>

3.4.10.1 This command enables and disables the automatic recall of non-volatile memory location 1 at power up. The configuration in non-vol location 1 is stored by the use of the STORE command. Refer to Section 3.4.18 for details of the STORE command.

NOTE

If non-volatile location 1 is cleared and PUPRCL is ON, no recall will take place at power up.

3.4.11 READ <module address>.<module specific syntax>

3.4.11.1 This command is supported by digital cards only. Refer to the individual module sections for a description of the syntax and functions performed.

3.4.12 RECALL <non-vol location>
where <non-vol location> = 1|2|.....|50

3.4.12.1 This command will set all switching modules in the VXI chassis to the configuration stored in the non-volatile location specified. The physical location of the modules in the chassis slots is unimportant as long as the same type modules are at the same module addresses as when the switching system configuration was stored, and the rules governing module locations are observed.

Note that an error will be generated if an attempt is made to RECALL a memory setting into a switching system configuration that differs from the configuration present when the memory setting was stored. An error will also be generated if an attempt is made to RECALL a memory setting from an empty location.

3.4.13 RESET

NOTE

A delay of at least 100 msec may be required after a RESET command before issuing the next command.

3.4.13.1 This command causes all switching modules to be set to their de-energized states.

3.4.14 SCAN <ON|OFF|CONT>

3.4.14.1 The SCAN ON command enables the Option 01 to open and close the channels as specified in the scan list in turn. Each channel is closed on receipt of a trigger signal from one of the VXIbus TTLTRG lines or the VXIbus trigger command is received. The Option 01 will scan the channels until it reaches a break point or the SCAN OFF command is received. Refer to Section 3.4.16 for further information on the scan list.

3.4.14.2 The SCAN CONT command causes the Option 01 to resume scanning the channels on the scan list after pausing at a break point in the scan list. The Option 01 will continue to scan until it reaches a break point on the scan list, or it receives the SCAN OFF command.

3.4.14.3 SCAN OFF causes the 1260 Series to stop scanning. Scanning may only be resumed by the use of the SCAN ON command.

NOTE

The SCAN command may also be used to recall non-volatile memory settings in turn. Refer to Section 4.4.16 for further information on the scan list.

3.4.15 SETUP <module address>.<seqmode>

3.4.15.1 This command is used to control the sequence in which switching modules relays are opened and closed. The sequence modes (<seqmode>s) are IMM (Immediate), BBM (Break-Before-Make) and MBB (Make-Before-Break).

3.4.15.2 The Immediate (IMM) sequence mode will cause the opening and closing of switching module channels as quickly as possible, and the sequence of opening and closing is indeterminate. Care must be taken to avoid damaging connections while the switching module is in a state of transition, i.e., short circuiting power supplies to ground, connecting high power outputs together, or applying excessive power to low impedance inputs.

3.4.15.3 The Break-Before-Make (BBM) sequence mode causes existing channel closures to be opened before new channel closures are made. BBM is the default (power up) state.

3.4.15.4 The Make-Before-Break (MBB) sequence mode causes new channel closures to be executed before existing channel closures are opened.

3.4.16 SLIST <scan list>

where <scan list> is <module address>.<channel> [;<module address>.<channel>];....

3.4.16.1 This command enters the slot and channel information to be used in the scan list while in the SCAN mode.

NOTE

Non-volatile memory locations may be specified instead of a <module address>.<channel>. It should be noted that if a non-volatile location is used, all relays closed as a result will stay closed when the next scan entry is executed, unless the next scan entry is another non-volatile recall location. With the normal <module address>.<channel > entry, the current scan entry is opened before the next is closed.

3.4.16.2 The range of values of <module address> is from 1 to 12. Switching channels are closed if <channel> is a module specific statement. If a non-volatile memory setting is used, it must be an integer value between 1 and 50.

3.4.16.3 A break point in the scan list will cause the Option 01 to stop scanning after opening the previous channel. A break point in the scan list is defined as the character zero (0), delimited by semi-colons (;0;). Scanning is resumed only after receipt of the SCAN CONT or SCAN ON commands. SCAN CONT will cause the Option 01 to resume scanning from the scan list break point it was paused at and the SCAN ON command will cause the Option 01 to resume scanning from the beginning of the scan list.

3.4.16.4 If the Option 01 pauses at a scan list break point, bit 4 of the GPIB status byte, Scan list at break point, is asserted and SRQ asserted if the SRQMASK permits. Refer to Section 3.4.17 for further information on the SRQMASK command.

3.4.17 SRQMASK <32|33.....254|255>

3.4.17.1 This command controls the circumstances under which the Option 01 will cause a VXI/GPIB Resource Manager to assert SRQ by masking the Option 01 status byte. The mask value, <integer> is the decimal equivalent of the binary eight bit byte ANDED with the GPIB status byte, i.e., if a bit in the mask is a logic 1, the assertion of the corresponding bit in the status byte will cause the Option 01 to assert SRQ. Refer to Table 4-1 for the bit assignments of the GPIB Status byte. SRQ is asserted by raising the VXI Request True exception to the VXI Resource Manager. Note the status byte also details the possible responses of the 1260-01 to a GPIB serial poll.

NOTE

Service Requested (bit 7) is cleared by a VXI Status Request command (or by sending a serial poll to a VXI/GPIB Resource Manager. This will also raise a VXI Request False exception which will cause a VXI/GPIB Resource Manager to de-assert SRQ.

NOTE

Programming Error (bit 6) is cleared when the YERR command is received.

NOTE

Scan List at Break Point (bit 4) is cleared when a SCAN ON, SCAN OFF or SCAN CONT command is received.

Table 3-1, 1260 Option 01 Status Byte

Bit Number	Description
1 (lsb)	Unused
2	Unused
3	Unused
4	Scan List At Break Point
5	Ready
6	Programming Error
7	Service Requested
8 (msb)	Unused

3.4.17.2 The Programming error bit cannot be masked, and so the range of values for valid SRQMASKs is 32 - 63, 96 - 127, 160 - 191 and 223 - 255.

3.4.17.3 The power up (default) value of the SRQMASK is 40, i.e., programming error or Scanlist at break point will cause SRQ to be asserted.

3.4.18 STORE <non-vol location> where <non-vol location> = 1|2|.....|50

3.4.18.1 This command will store the present state of all switching modules resident in the VXI chassis in the non-volatile memory location specified.

3.4.18.2 A STORED configuration must be recalled into the same module set as was stored. Any changes in module location will be disregarded as long as the same module types are at the same module addresses as were stored.

3.4.19 SYNC <0|1|2|3|4|5|6|7|8>

3.4.19.1 The commands SYNC <0|1|2|3|4|5|6|7> connect the selected SYNC output to the corresponding TTLTRG line. SYNC 8 disconnects the SYNC output from the TTLTRG lines and is the default (power up) state.

3.4.20 TEST 0.<testnumber> where <testnumber>::=1|2|3

3.4.20.1 This command causes the Option 01 to carry out a self test. The possible tests are:

1. Non-Destructive RAM Test
2. EPROM Checksum Test
3. Non-Destructive Non-Volatile Memory Test

NOTE

If non-vol memory initialization is required, use the TEST 0.3 command to accomplish the initialization. Non-vol initialization will only be accomplished in the event of a firmware revision change, or if corruption of the non-vol is detected. If these conditions have not occurred, the TEST 0.3 command will be executed without reinitializing the non-vol memory. If non-vol memory initialization is required, the contents of the non-vol are invalid and will be erased during initialization.

3.4.20.2 On commencing a test, the Ready bit of the status byte is reset until the test is completed.

3.4.20.3 If self-test passes, the 1260-01 will return a hexadecimal 7F. If it fails, an SRQ is generated, and the operator must send a YERR command to determine the actual error.

3.4.21 TTLTRG <0|1|2|3|4|5|6|7|8>

3.4.21.1 Commands TTLTRG <0.....7> cause the connection of one of the eight TTLTRG lines to a selected switching card. TTLTRG 8 deselects the TTLTRG line selected.

3.4.22 WRITE <module address>.<module specific syntax>

3.4.22.1 This command is supported by 1260 digital cards only. Refer to the individual module sections for a description of the syntax and functions performed.

3.4.23 YERR

3.4.23.1 This command causes the master switching module in a system to transmit the location (<module address>) of the most recent error and a two digit number (<error number>) that describes the error. Refer to Table 3-2 for a listing of all possible values of <error number> and the corresponding error descriptions.

Table 3-2, 1260 Series Error Codes

<error number>	Error Description
0	No error
1	Invalid module number specified
2	Specified module not installed
3	Invalid channel number specified
4	Invalid port number specified
5	Command syntax error
6	Read value larger than expected
7	Function not supported by module
8	Expected line terminator not found
9	Valid command not found
20	Exclude list too long
21	Channel entered on exclude list twice
22	Module doesn't allow exclude function
23	Scan list too long
24	Module doesn't allow scan
25	Equate list too long
26	Module entered on scan list twice
27	Incompatible modules equated or digital modules invalid
31	SRQMASK invalid
40	Number invalid as a test number
41 *	RAM test failure
42 *	ROM test failure
43 *	Non-vol memory test failure
44 *	Incompatible operating system EPROMS, software revisions
45 *	Self-test CPU or related circuitry failure
46 *	Self-test 24 V supply failure
47 *	Self-test timer chip failure
48 *	Insufficient RAM for option module
49 *	Checksum error reading from option module EPROM
50 *	Option module EPROM incompatible with CPU EPROM
51	Failed confidence test
55	Error STOREing to non-vol memory
56	Error RECALLing from non-vol memory
57	Non-vol storage location number out of range
58	RECALLing from an empty non-vol location not allowed
59	Non-vol memory initialization required (See description of TEST command for instructions on how to accomplish initialization.)

Note: * Denotes a **fatal** error

SECTION 4 THEORY OF OPERATION

4.1 Introduction

4.1.1 This section describes the theory of operation of a 1260 Series switching system as configured from a 1260-01 Smart Card, and a 1260 Series switching module. The 1260-40 switching module is used as an example, and the reference designators for that card are used in the circuit descriptions given in this section.

4.1.2 This section begins with a block diagram description of the switching system, and extends the description to a discussion of the circuit action that takes place in the 1260-01 and 1260-40 at the component level.

4.2 Functional Blocks

The 1260-01 Switch Controller board consists of the following functional blocks:

a. The Microprocessor Block

b. The VXIbus Interface Block

c. The Lbus Interface Block

The functional relationships between the blocks of the 1260-01 is illustrated in Figure 4-1. Switch configuration information is received from the VXIbus via the VXIbus interface, and routed to the microprocessor block. The commands received are interpreted by the microprocessor block, and the corresponding switch control information is transmitted to the appropriate switch module via the Lbus interface.

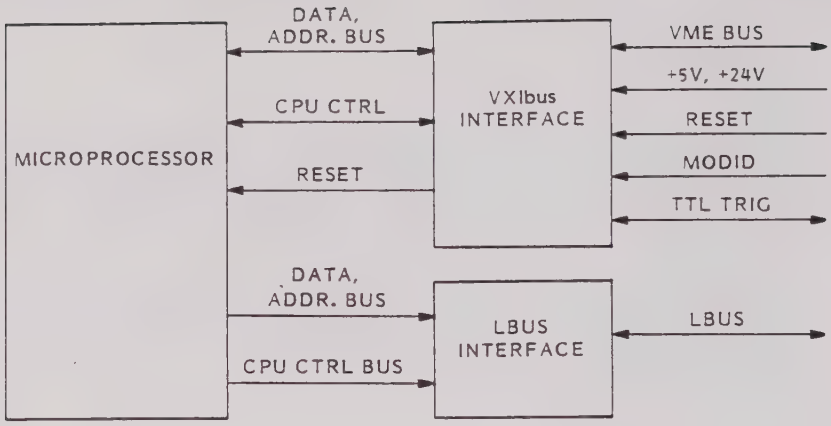

Figure 4-1, 1260 Smart Card Block Diagram

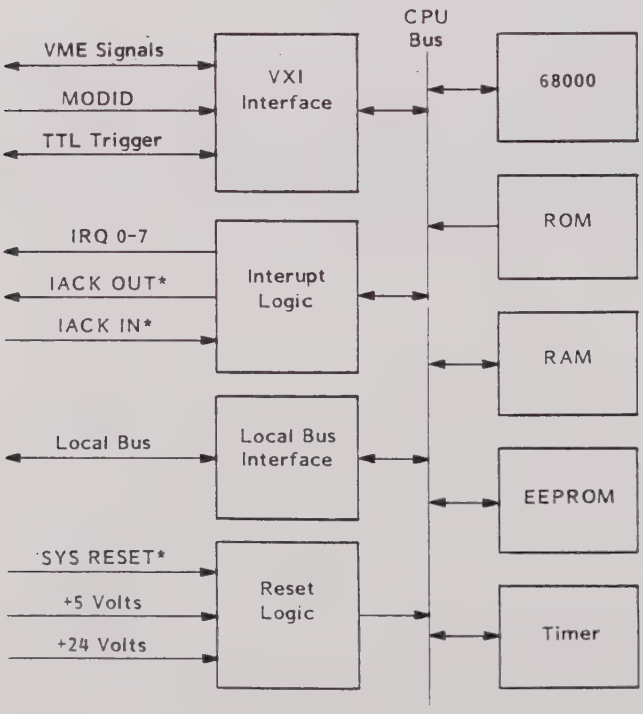

Figure 4-2, 1260 Microprocessor Block Diagram

4.3 Theory of Operation

4.3.1 Power Supplies

4.3.1.1 DC power for the 1260-01 is derived from the VXI backplane via its host switch card. A +5V supply is used to operate all of the logic on the Master and Slave boards. A +24V supply is used to supply relay coil drive, and the +24V supply is monitored by U11b on the 1260-01 to ensure the relay coil drive voltage is available.

4.3.2 Microprocessor Block

4.3.2.1 The microprocessor block accepts commands from the VXIbus, interprets the commands and sends the required data to the appropriate relay card via the Lbus interface. A simplified block diagram is given in Figure 4-2. The microprocessor is a Motorola MC68000 operating at 8 MHz. This block also contains ROM, RAM, EEPROM, address decoding, interrupt logic, a counter/timer and general purpose input and output ports.

4.3.2.2. The program memory consists of two devices, U33 and U34. These devices provide 64K by 16 (optionally 128K by 16) of program memory as selected by W2. The OE\ of U33 and U34 is controlled by a PAL, U2, and programmed as follows:

MLOE\ goes low when R/W\ is high and LDS\ is low .

MHOE\ goes low when R/W\ is high and UDS\ is low.

4.3.2.3 The system RAM consists of U114 and U115. These devices provide 32K by 16 of memory. The OE\ of U114 and U115 is also derived from U24 in addition to their WR\ signals. U24 is programmed as follows:

MLWE\ goes low when R/W\ and LDS\ are low .

MUWE\ goes low when R/W\ and UDS\ are low.

4.3.2.4 The EEPROM is an 8K by 8 device and is configured for 6800 peripheral timing. PWE\ goes low when R/W\ is low and the clock E is high. The non-volatile memory's CE\ is qualified by U21a with NVENB\ which is generated by the reset circuitry. This prevents false writes to the EEPROM during power up and power down sequences ensuring memory integrity. The time delay between writes to the EEPROM is controlled by the system software.

4.3.2.5 Address decoding is performed by a PAL, U23. This device provides the necessary logic to map the other devices into the microprocessors memory map. This device also provides the necessary DTACK\ or VPA\ signals for the microprocessor depending on whether the selected device is a 16 bit device or a 6800 peripheral. LDTACK\ is an input to U23, and is used to insert wait states when an Lbus cycle is accessed. The fourth and final function provided by U23 is to detect an interrupt cycle from the states of FC0\ and FC1\ and dropping the VPA\ line.

4:3.2.6 The microprocessor is configured to support up to seven interrupts without requiring the polling of devices to determine the interrupt. These seven sources are encoded onto three lines by U108 which in turn drives the IPL0 - 2 lines of the microprocessor.

4.3.2.7 All time dependent tasks are controlled by a counter\timer which is a Motorola 6840 CTC. This is mapped as a 6800 peripheral. The timer is configured by the microprocessor, and generates interrupts at a programmed interval. During normal operation, the timer is programmed to interrupt the microprocessor every 10 mS. Note the interrupt response latency of the microprocessor is expected to vary by some small amount.

4.3.2.8 The microprocessor system has one general purpose input port, and two general purpose output ports of 8 lines each. These ports are mapped as part of the VXIbus interface and use 6800 timing. The input port, U110, is used to read the status of the VXIbus interface state machine, and the status of the +24V on the backplane in conjunction with U11b. This port also reads the status of the VXIbus chassis receiver mechanism safety switches, if fitted, and the checkin signal used to put the microprocessor in self test mode. The safety switch input is protected by R111, Q3 and Q4, while R112 acts as a pullup when the switches are not used. U106 is an output port which is used along with U1, U2 and U3 to select which VXIbus defined TTLTRG line will be used to trigger the switching system. U109 is an output port to the VXIbus state machine that clears the trigger input latch, the trigger output, and the check output used in self-test mode.

4.3.3 The Reset Circuits

4.3.3.1 The reset circuit provides a reliable signal under the most difficult situations. The circuit consists of a voltage reference, VR1, which provides a nominal 1.23 voltage level, U11d, which senses when the +5V supply drops below 4.5 volts and discharges the reset timing capacitor, C2, via Q2. As the +5V supply is applied to the board, the output of U11d is held low until the supply reaches a nominal 4.75 volts, at which time it goes high. This signal is inverted by U11c which in turn drives Q2. As long as the +5V line is below +4.75 volts, the gate of Q2 is held high and prevents C2 from charging. If, at any time the +5V supply drops

below 4.5 volts due to the hysteresis provided by Z4d, the gate of Q2 is again pulled high, and the transistor discharges C2 restarting a reset cycle. CR1 holds the voltage across C2 to 0.6 volts above the reference voltage to reduce the time required to discharge the capacitor. U11a senses the voltage across the reset timing capacitor C2, and drives the HALT\ line from which all other reset signals are derived. This comparator also provides hysteresis due to Z4c to prevent oscillation as the capacitor voltage crosses the reference voltage. The HALT\ signal is the hardwired logical-OR of three signals. Q1 buffers the reset signal from the VXIbus backplane and drives HALT\. U111d buffers the low +5V sense signal from U11d and also drives HALT\. U111a inverts HALT\ to provide the non-inverted RESET signal while U111c buffers HALT\ to provide the board's inverted RESET\ signal. U111b and Q100 provide a high powered BPRST\ signal for the switching cards in the 1260 Series switching system via the Lbus. The +24V supply from the backplane is divided by Z2b, Z2c and R102 and compared to the reference voltage by U11b. This comparator drives the general purpose input port which is read by the microprocessor.

4.3.4 VXI Interface

4.3.4.1 The 1260-01 implements a VXI message-based device protocol. The VXI Interface contains the circuitry necessary to pass commands, data, and TTLTRG synchronization signals between the VXI bus and the 68000 microprocessor.

4.3.4.2 The VXI interface is accomplished using three busses; the external VXI bus, an internal replica of the VXI bus, and the microprocessor's bus. The data lines for the two VXI busses are connected using U10 and U100 for the data lines. Similarly, U8 and U17 buffer the address and control signals. Data bus transfers are controlled by sequencer U26. S1 is used to select the logical address for the module, while U7 and U103 decode the external address and address modify lines.

4.3.4.3 The internal VXI bus is connected to the microprocessor's bus through several registers, as defined in the VXI specifications. Actual interfacing of the registers to the 68000's bus is accomplished using U23 to control the handshake, U113 as an address decoder, and U109 as a general purpose register. The other VXI-defined registers are implemented as follows:

ID and Device Type Registers	U19
Status and Control Register	U28
Protocol Register	U19
Response Register	U29
Data Low Register	U9 and U101
Event Register	U20
Logical Address Register	U102

4.3.4.4 TTLTRG lines are used by external devices to open and close the signal paths, as specified by previously received SLIST commands from the Slot 0 controller. Each of the TTLTRG lines corresponds to a different "channel" number.

4.3.4.5 The microprocessor selects TTLTRG lines through address decoder U113, register 4106, and multiplexers U1 and U3. U1 is used for output, while U3 is used for input. U2 is a buffer which drives the selected output TTLTRG lines.

4.3.5 The Lbus Interface

4.3.5.1 The Lbus interface is the vehicle through which the microprocessor controls the relay cards in the system. It is a state machine which transmits the microprocessor's address and data serially through the Lbus to the switching modules in the switching system. The state machine makes the transfer of data to and from the relay latches look as though they are memory mapped in the microprocessors address space, and because of the ability to add wait states to the microprocessors's bus cycle, this process is entirely transparent to the user.

4.3.5.2 The Lbus interface state machine is implemented in a master and slave configuration, where the master is part of the microprocessor card and slaves are part of each relay card. The master state machine is implemented in two 22V10 PALs, three shift registers and three differential line drivers. U14 is the primary state machine and controls the state transitions for all data transfer activities. The master state machine has 27 states, where state S0 is the dormant state. When the state machine detects that its select line (LBUS\) and AS\ input are both low, it will proceed to state S1; otherwise it will remain at state S0. During state S1, LD/SH\ is lowered and the 13 lowest address lines are loaded into U22 and U112. During states S2 and S14, the address data is shifted through a multiplexer, U13, and line driver U4 onto the Lbus. This data is received by all relay cards in the system, and the four most significant bits of the 13 are used to select a specific card.

4.3.5.3 If the microprocessor was executing a write cycle, the data would be loaded into data shift register U12 during state S1. This register would be held in its hold mode until state S18 where it is allowed to shift its contents out via the multiplexer, U13, and line driver U4 to the Lbus. Alternatively, if the microprocessor was executing a read cycle, then data shift register U12 would shift in the data from the slave state machine during states S17 through S24, and hold the data for states S25 and S26 to allow the microprocessor to read the data back. In both cases, the state machine generates the LDTACK\ signal for the microprocessor, which is combined with the other DTACK\ signals in the address decoder PAL U23, making data transfers to the slaves transparent to the microprocessor program.

4.3.5.4 Each slave relay card has a slave state machine. These state machines track the master state machine during the address transfer portion of a data transfer cycle. The slaves receive five signals from the master which are:

a. Clock, which only toggles during a transfer cycle to reduce noise induced into the relay cards.

b. A/D, which distinguishes between address and data transfers.

c. R/W, which distinguishes between read and write cycles.

d. STROBE, which tranfers the newly written data into the relay latches at the end of a write cycle.

e. DATA, which is a bidirectional line for tranferring address and data between master and slaves.

4.3.5.5 The slave state machines in the system remain dormant until the master needs to transfer data to or from one of them. The master applies a clock signal to the Lbus, and raises the A/D line to indicate the start of a transfer. As a result, the slave state machines will lag the master by one state, and has only 26 states. Note that the following description of the slave state machines use the 1260-40 switching module as an example, and the reference designators refered to apply to this assembly only. The principles of operation are, however, identical for all relay assemblies within the 1260 Series.

4.3.5.6 The slave state machine is implemented in a 22V10 PAL, U52, and it tracks the states and provides the control signals for the switching module. When U52 receives a clock signal and A/D is high, it proceeds from state S0 to S1 through to S13 and starts clocking the address data into shift registers U62 and U61 using the CLKADDR signal. From state S14 to the end of the transfer, CLKADDR remains high, maintaining the address data at the shift register's outputs. The four highest address bits transfered to the slave are routed to a comparator, U56, and compared to the board address as set by SW1. If there is a match, BOARDENA goes high indicating that the data to be read or written pertains to this card. BOARDENA is read by the state machine U52, and if it is high during state S14, the state machine will proceed to state S15. If it is not, then it will return to state S0.

4.3.5.7 If the state machine proceeds to state S15 and a write cycle is being executed, then CLKDENA goes high from state S16 until S21 and U53 gates its CLOCK input on and drives the CLKIN signal. CLKIN is gated to the correct input shift register through U54 and U55, as determined by the lower order address bits from U62 and U61. A9 is used to split the address space on the board between the relay space and the identification byte space. During the slave's state S24, the master will raise the STROBE line for one state, transfering the shift register's data into the relay latch. The relay latch then drives a sinking current driver to control the relay coil.

4.3.5.8 If a read cycle is being executed and applies to the relay board, CLKDENA goes high from state S15 to S21, and U53 gates its CLOCK input on and drives the CLKOUT signal. CLKOUT drives all of the read back shift registers. During state S15, SH/LD\ goes low and the data at the parallel inputs of the shift registers

is loaded in. The relay data is derived from the relay coil drive voltage, and is divided by a 220K and 47K resistor set. The identification byte register is also loaded and shifted out, but its inputs are wired to a specific value used by the system to identify the type of card being accessed. Each read back shift register's output is routed to a multiplexer, U70, U71 and U72. The required output is selected by the address as presented by U62 and U61. This data is routed to the line driver U51 which is enabled by U53's DIN/OUT\ signal which goes low when CLKDENA is high and RD/WR\ is high.

SECTION 5 DRAWINGS

401951	PCB Assy, L-Bus Jumper	5-2
431951	Schematic, L-Bus Jumper	5-3
401951	Parts List, PCB Assy, L-Bus Jumper	5-4
401901	PCB Assy, 1260 Master CPU (VXI Rev. 1.2)	5-5
431901	Schematic, 1260 Master CPU (VXI Rev. 1.2)	5-7
401901	Parts List, 1260 Master CPU	5-20
401901-003	PCB Assy, 1260 Master CPU (Ver. 1, VXI Rev. 1.3)	5-22
431901-003	Schematic, 1260 Master CPU (Ver. 1, VXI Rev. 1.3)	5-24
401901-003	Parts List, 1260 Master CPU	5-37
401901-005	PCB Assy, 1260 Smart CPU, Rev. 1.3	5-39
431901-001	Schematic, 1260 Smart CPU, Rev. 1.3	5-40
401901-005	Parts List, 1260 Smart CPU	5-53
------	List of Suppliers	5-55

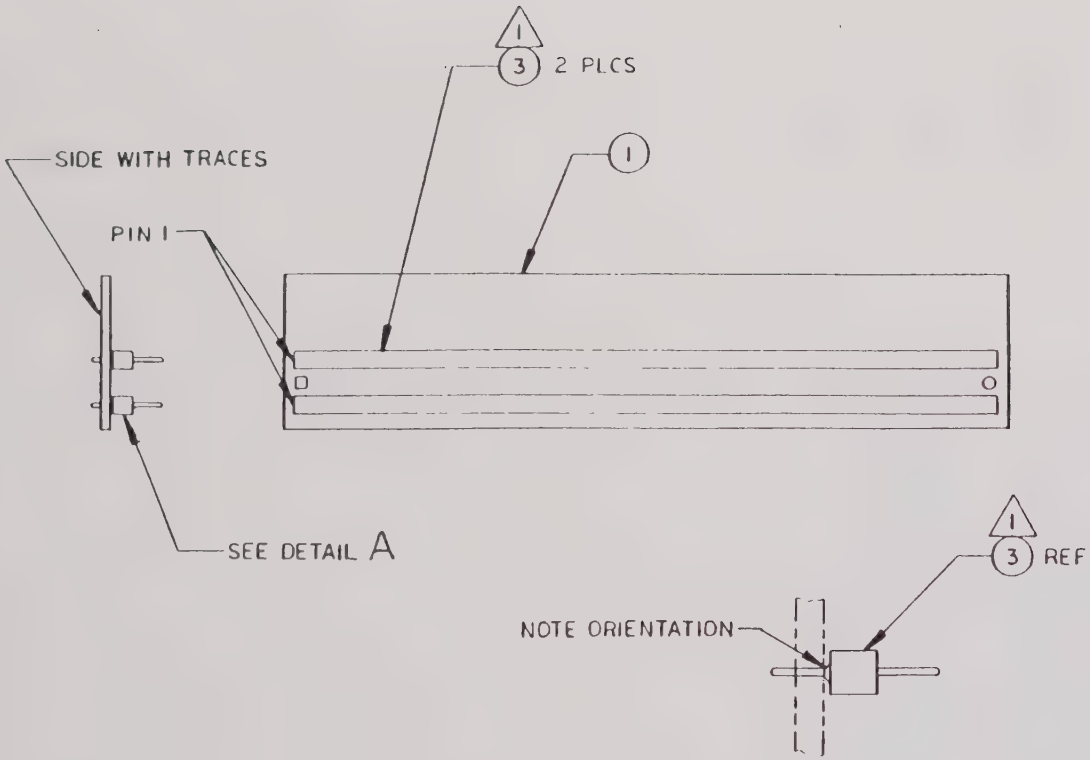

DETAIL A
SCALE 4:1

1 INSTALL ITEM 3 WITH SHORT LEADS IN PCB PERPENDICULAR AND FIRMLY SEATED ON PCB AFTER SOLDERING.

NOTES UNLESS OTHERWISE SPECIFIED

PROPRIETARY NOTICE
THIS DOCUMENT AND THE TECHNICAL DATA HEREON DISCLOSED ARE PROPRIETARY TO RACAL DANA INSTRUMENTS INC. AND SHALL NOT, WITHOUT EXPRESS WRITTEN PERMISSION OF RACAL DANA INSTRUMENTS INC. BE USED, RELEASED OR DISCLOSED IN WHOLE OR IN PART, OR USED TO SOLICIT QUOTATIONS FROM A COMPETITIVE SOURCE OR USED FOR MANUFACTURE BY ANYONE OTHER THAN RACAL DANA INSTRUMENTS INC. THE INFORMATION HEREON HAS BEEN DEVELOPED AT PRIVATE EXPENSE AND MAY ONLY BE USED FOR PURPOSES OF ENGINEERING EVALUATION AND FOR INCORPORATION INTO TECHNICAL SPECIFICATIONS AND OTHER DOCUMENTS WHICH SPECIFY PROCUREMENT OF PRODUCTS FROM RACAL DANA INSTRUMENTS INC.

RACAL-DANA Instruments Inc.
4 GOODYEAR IRVINE CALIFORNIA 92714

DOCUMENT TITLE
PCB ASSY, L-BUS JUMPER

SIZE	CODE IDENT NO	DOCUMENT NO	REV
B	21793	401951	A

SCALE 2:1 SHEET 1 OF 2

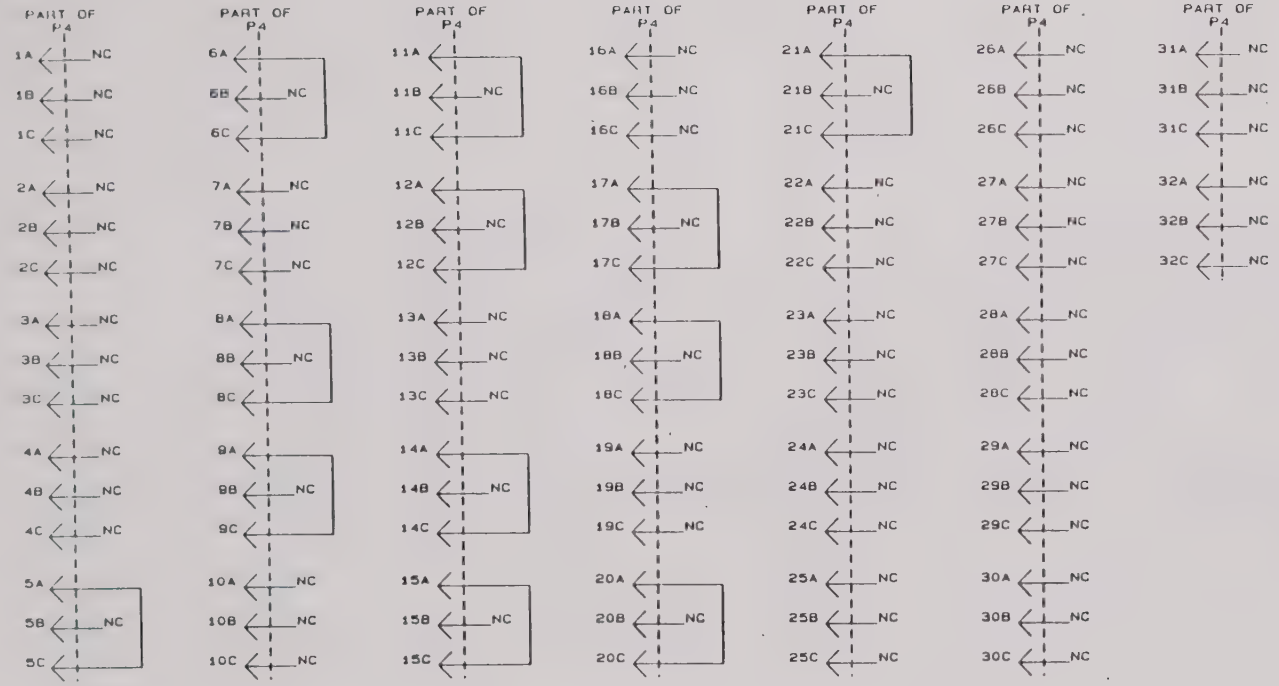

COMPONENT SIDE OF 401951
SCALE: NONE

PROPRIETARY NOTICE

THIS DOCUMENT AND THE TECHNICAL DATA HEREON DISCLOSED ARE PROPRIETARY TO RACAL DANA INSTRUMENTS INC AND SHALL NOT WITHOUT EXPRESS WRITTEN PERMISSION OF RACAL DANA INSTRUMENTS INC BE USED RELEASED OR DISCLOSED IN WHOLE OR IN PART OR USED TO SOLICIT QUOTATIONS FROM A COMPETITIVE SOURCE OR USED FOR MANUFACTURE BY ANYONE OTHER THAN RACAL DANA INSTRUMENTS INC THE INFORMATION HEREON HAS BEEN DEVELOPED AT PRIVATE EXPENSE AND MAY ONLY BE USED FOR PURPOSES OF ENGINEERING EVALUATION AND FOR INCORPORATION INTO TECHNICAL SPECIFICATIONS AND OTHER DOCUMENTS WHICH SPECIFY PROCUREMENT OF PRODUCTS FROM RACAL DANA INSTRUMENTS INC

RACAL-DANA Instruments Inc.
4 GOODYEAR, IRVINE, CALIFORNIA 92714

DOCUMENT TITLE

SCHEM., LBUS JUMPER

SIZE	CODE IDENT NO	DOCUMENT NO	REV
B	21793	431951	A

SCALE —— SHEET 1 OF 1

401951 PCB ASSY., L-BUS JUMPER

REF DESIG	RACAL-DANA P/N	DESCRIPTION	FSC	MANUFACTURER'S P/N
{1}1	411951	PCB, L-BUS JUMPER (UNLOADED)	21793	411951
{3}2	601858-032	CONNECTOR, PCB, PLUG, 32PIN	52072	CAS32MPF1S

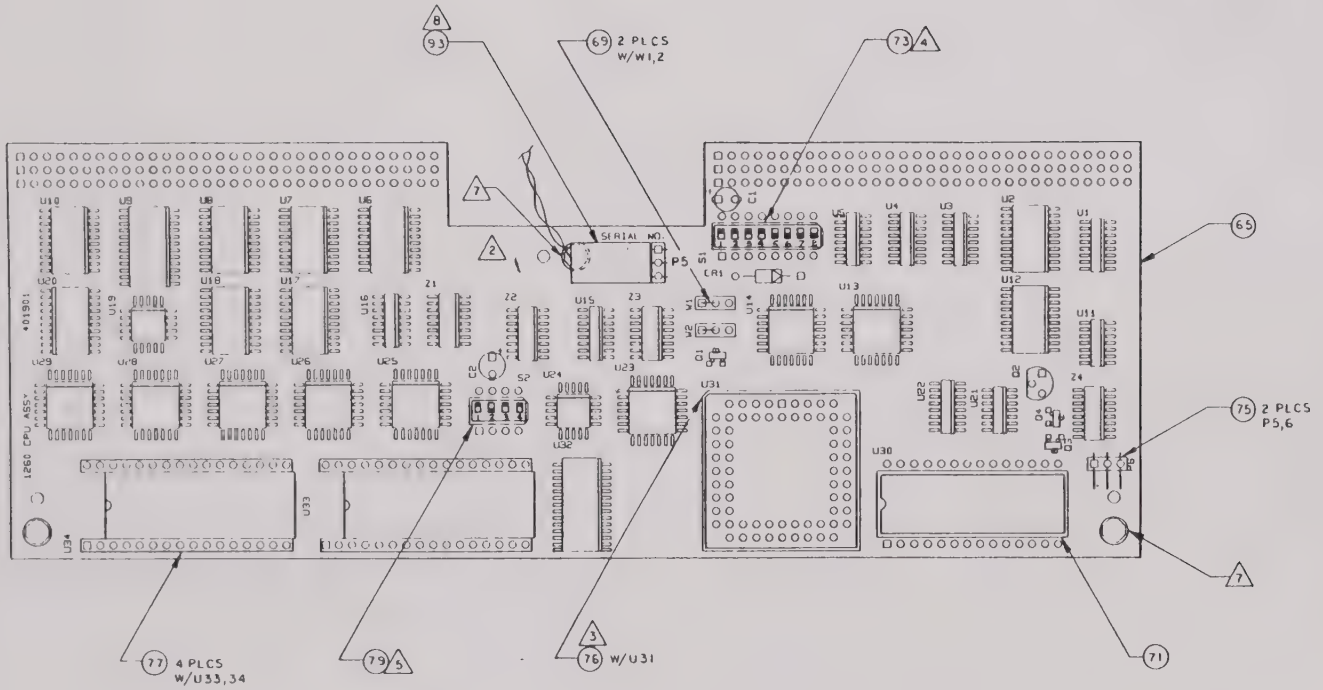

COMPONENT SIDE

4 INSTALL CABLE ASSY (ITEM 93) INTO P5 (ITEM 75)

7 INSTALL STANDOFF (ITEM 92) BEFORE P5,6 (ITEM 75).

6 REFERENCE DESIGNATORS RANGE FROM 1 TO 99 FOR THE COMPONENT SIDE AND FROM 100 TO 199 FOR THE SOLDER SIDE OF THE PCB

2 ITEM 75, S2, SWITCHES 1,3,4 ARE "ON" POSITION, SWITCH 2 IS "OFF" POSITION.

4 ITEM 73, S1, SWITCHES 1,2,3,4 ARE "ON" POSITION, SWITCHES 5,6,7,8 ARE "OFF" POSITION.

3 NOTE POSITION OF ANGLE ON SOCKET OF U31

2 INK STAMP SERIAL NUMBER ON COMPONENT SIDE IN INDICATED AREA

1 REFERENCE SCHEMATIC 431901

NOTES: UNLESS OTHERWISE SPECIFIED

PROPRIETARY NOTICE
THIS DOCUMENT AND THE TECHNICAL DATA HEREON DISCLOSED ARE PROPRIETARY TO RACAL DANA INSTRUMENTS INC AND SHALL NOT WITHOUT EXPRESS WRITTEN PERMISSION OF RACAL DANA INSTRUMENTS INC BE USED RELEASED OR DISCLOSED IN WHOLE OR IN PART OR USED TO SOLICIT QUOTATIONS FROM A COMPETITIVE SOURCE OR USED FOR MANUFACTURE BY ANYONE OTHER THAN RACAL DANA INSTRUMENTS INC THE INFORMATION HEREON HAS BEEN DEVELOPED AT PRIVATE EXPENSE AND MAY ONLY BE USED FOR PURPOSES OF ENGINEERING EVALUATION AND FOR INCORPORATION INTO TECHNICAL SPECIFICATIONS AND OTHER DOCUMENTS WHICH SPECIFY PROCUREMENT OF PRODUCTS FROM RACAL DANA INSTRUMENTS INC

RACAL-DANA Instruments Inc.			
4 GOODYEAR, IRVINE, CALIFORNIA 92714			
DOCUMENT TITLE			
PCB ASSY, 1260 MASTER CPU			
SIZE	CODE IDENT NO	DOCUMENT NO	REV
D	21793	401901	A
SCALE 2:1		SHEET 1 OF 4	

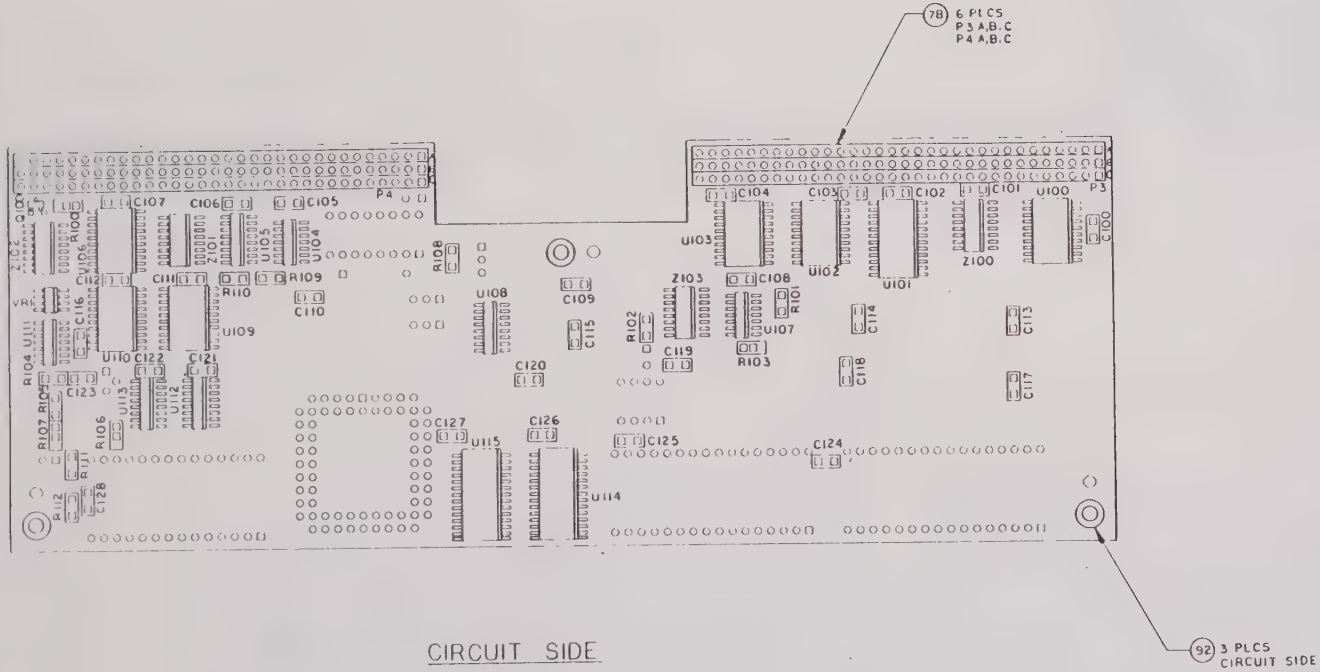

CIRCUIT SIDE

SIZE	CODE IDENT NO	DOCUMENT NO	REV
D	21793	401901	A
SCALE 2 1		SHEET 2 OF 4	

REF. DES.	IC TYPE	+5V PIN NO.	GND PIN NO.
U114, 115	62256	28	14
U108	74LS148	16	8
U107	74S38	14	7
U105	26LS32	16	8
U104	74LS74	14	7
U34	231167 (27512)	30, 32	16
U33	231166 (27512)	30, 32	16
U32	58C65	28	14
U31	MC68000CP-8	14, 52	16, 17, 56, 57
U30	6840P	14	1
U29	231155 (20RA10)	28	15
U28	231156 (20RA10)	28	15
U27	231157 (22V10)	28	14
U26	231158 (22V10)	28	14
U25	231159 (22V10)	28	14
U24	231160 (16L8)	20	10
U23	231161 (22V10)	28	14

IC POWER CONNECTIONS

REF. DES.	IC TYPE	+5V PIN NO.	GND PIN NO.
U22, 112	74HCT166	16	8
U21	74HC32	14	7
U20, 106, 109	74LS374	20	10
U19	231162 (16L8)	20	10
U15	74F109	16	8
U14	231163 (22V10)	28	14
U13	231164 (22V10)	28	14
U12	74HCT299	20	10
U11, 111	LM339	3	12
U10, 100	74ALS645A-1	20	10
U9, 101	74LS652	24	12
U8, 17, 102, 110	74LS244	20	10
U7, 18, 103	74F521	20	10
U4, 5	26LS31	16	8
U3	74LS151	16	8
U2, 6	74LS641-1	20	10
U1, 16, 113	74LS138	16	8

IC POWER CONNECTIONS

HIGHEST REF. DES.
Z4, 103
W2
VR1
S2
U34, 115
R112
Q4, 100
P6
CR1
C2, 128

4. REFERENCE DESIGNATORS RANGE FROM 1 TO 99 FOR THE COMPONENT SIDE AND FROM 100 TO 199 FOR THE SOLDER SIDE OF THE PCB.
3. RESISTOR VALUES ARE IN OHMS.
2. CAPACITOR VALUES ARE IN MICROFARADS, +/-20%, 50V UNLESS OTHERWISE SPECIFIED
1. RESISTOR NETWORKS ARE IN OHMS, +/-2%

NOTES UNLESS OTHERWISE SPECIFIED

PROPRIETARY NOTICE

THIS DOCUMENT AND THE TECHNICAL DATA HEREON DISCLOSED ARE PROPRIETARY TO RACAL DANA INSTRUMENTS INC AND SHALL NOT WITHOUT EXPRESS WRITTEN PERMISSION OF RACAL DANA INSTRUMENTS INC BE USED RELEASED OR DISCLOSED IN WHOLE OR IN PART OR USED TO SOLICIT QUOTATIONS FROM A COMPETITIVE SOURCE OR USED FOR MANUFACTURE BY ANYONE OTHER THAN RACAL DANA INSTRUMENTS INC. THE INFORMATION HEREON HAS BEEN DEVELOPED AT PRIVATE EXPENSE AND MAY ONLY BE USED FOR PURPOSES OF ENGINEERING EVALUATION AND FOR INCORPORATION INTO TECHNICAL SPECIFICATIONS AND OTHER DOCUMENTS WHICH SPECIFY PROCUREMENT OF PRODUCTS FROM RACAL DANA INSTRUMENTS INC

RACAL-DANA Instruments Inc.
4 GOODYEAR, IRVINE, CALIFORNIA 92714

DOCUMENT TITLE

SCHEM.,1260 MASTER

SIZE	CODE IDENT NO	DOCUMENT NO	REV
B	21793	431901	A

SCALE ———— SHEET 1 OF 13

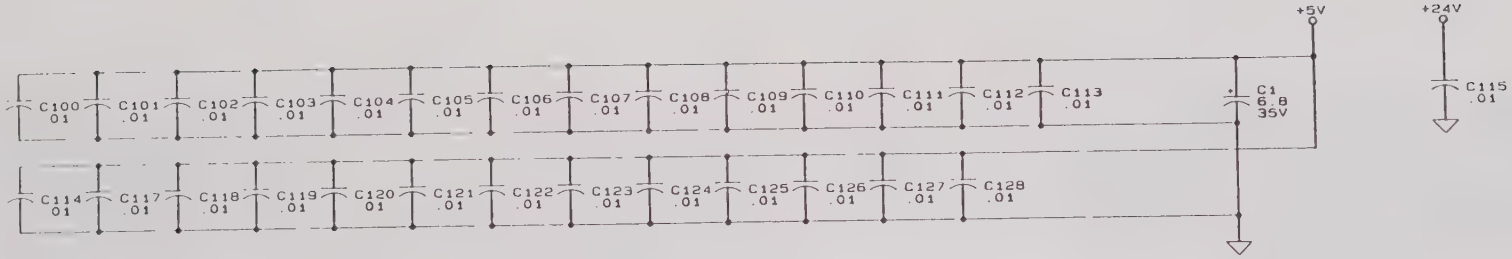

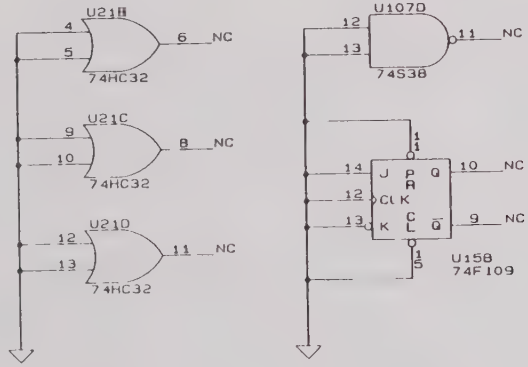

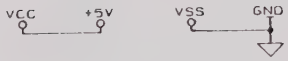

SIZE	CODE IDENT NO	DOCUMENT NO	REV
B	21793	431901	A
SCALE		SHEET 2 OF 13	

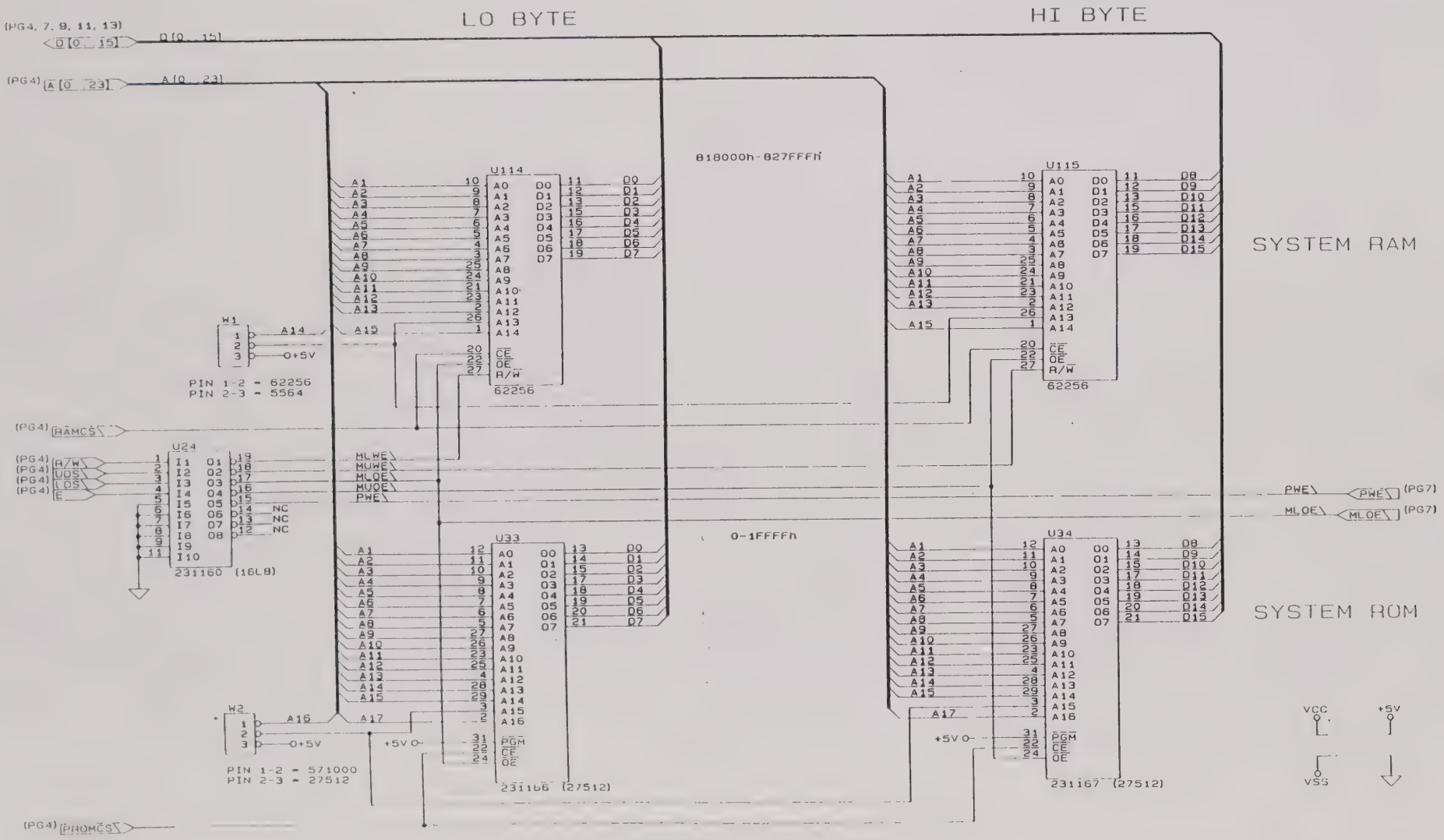

SIZE	CODE IDENT NO	DOCUMENT NO	REV
B	21793	431901	A
SCALE		SHEET 3 OF 13	

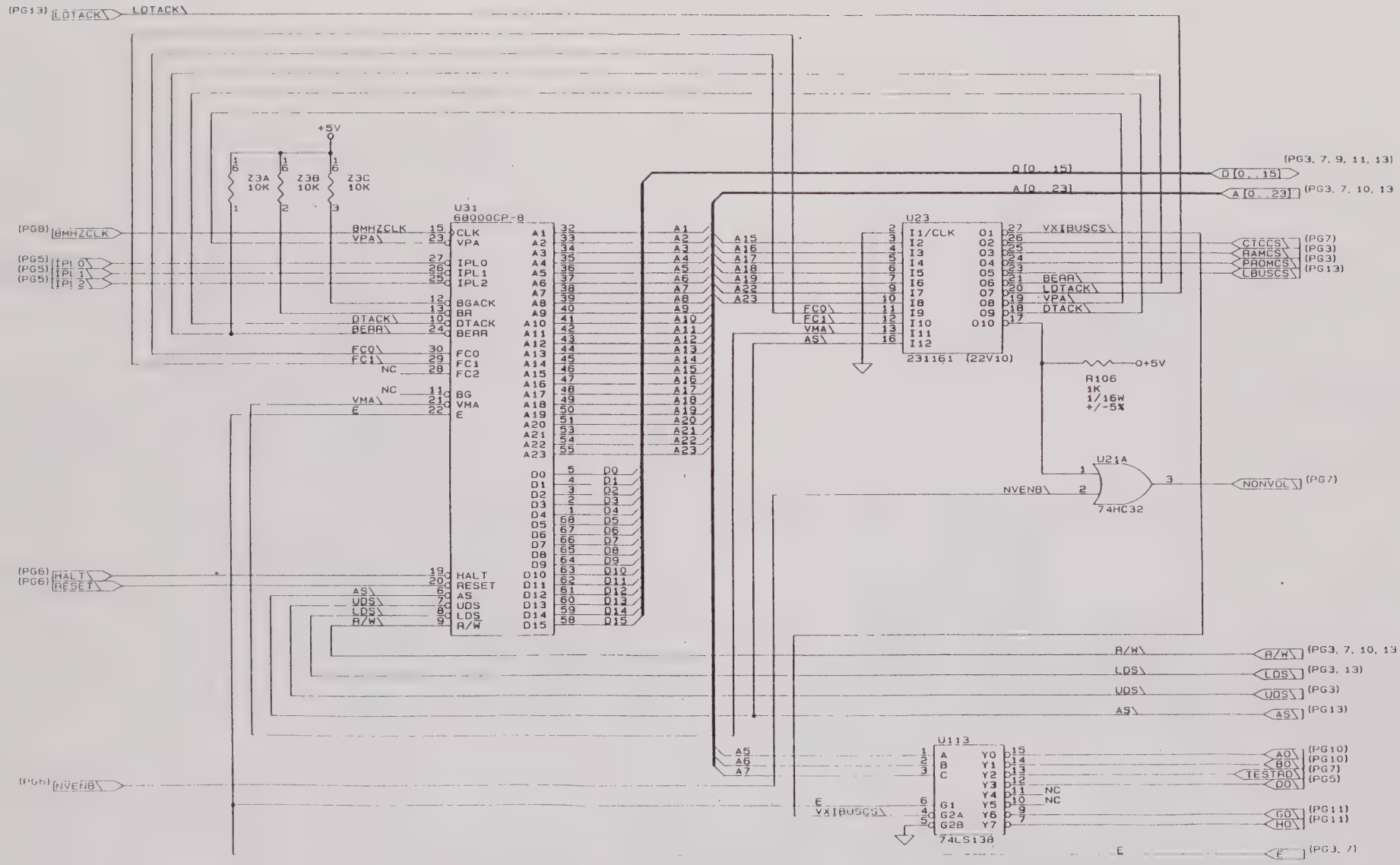

SIZE	CODE IDENT NO	DOCUMENT NO	REV
B	21793	431901	A
SCALE		SHEET 4 OF 13	

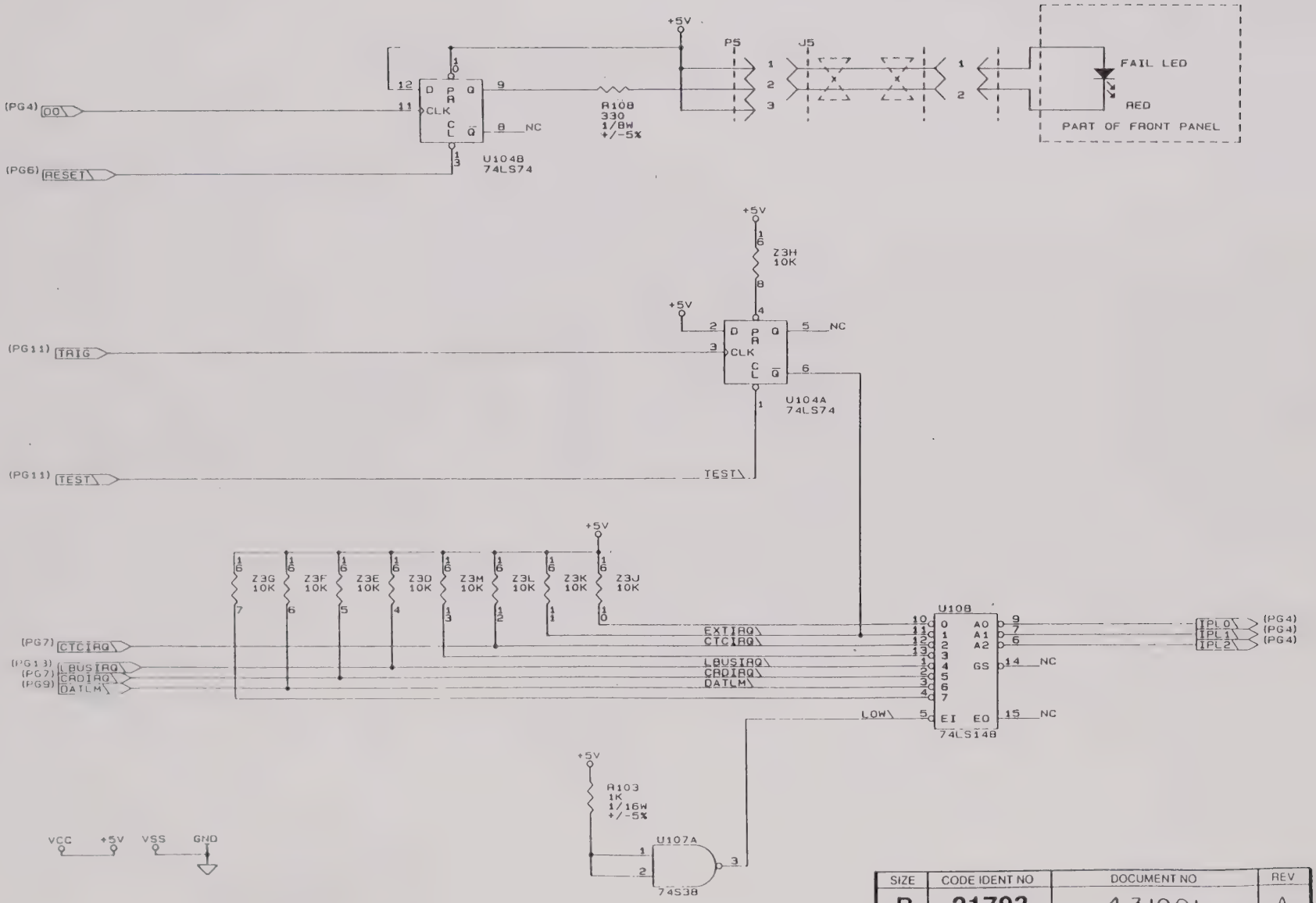

SIZE	CODE IDENT NO	DOCUMENT NO	REV
B	21793	431901	A
SCALE		SHEET 5 OF 13	

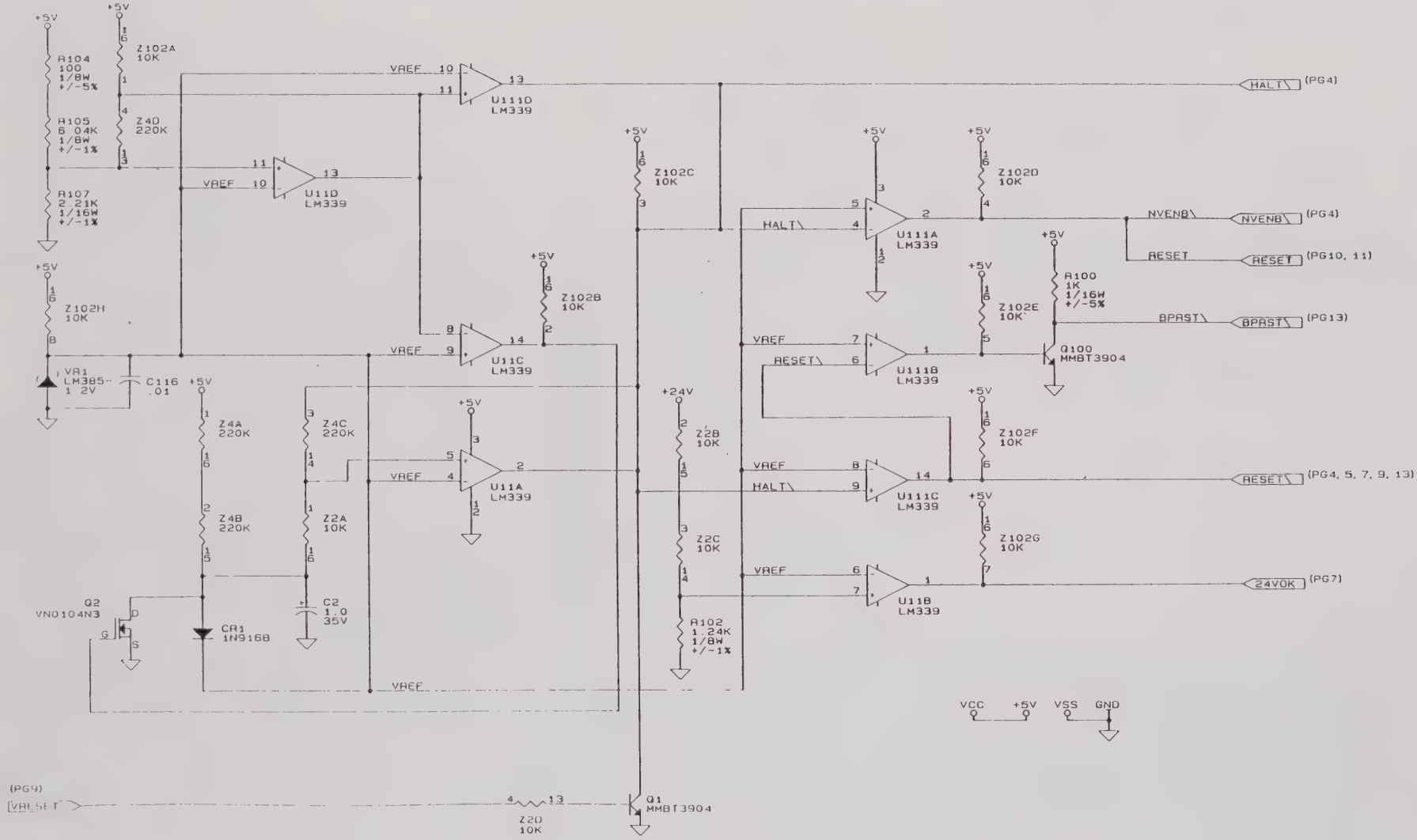

SIZE	CODE IDENT NO	DOCUMENT NO	REV
B	21793	431901	A
SCALE		SHEET 6 OF 13	

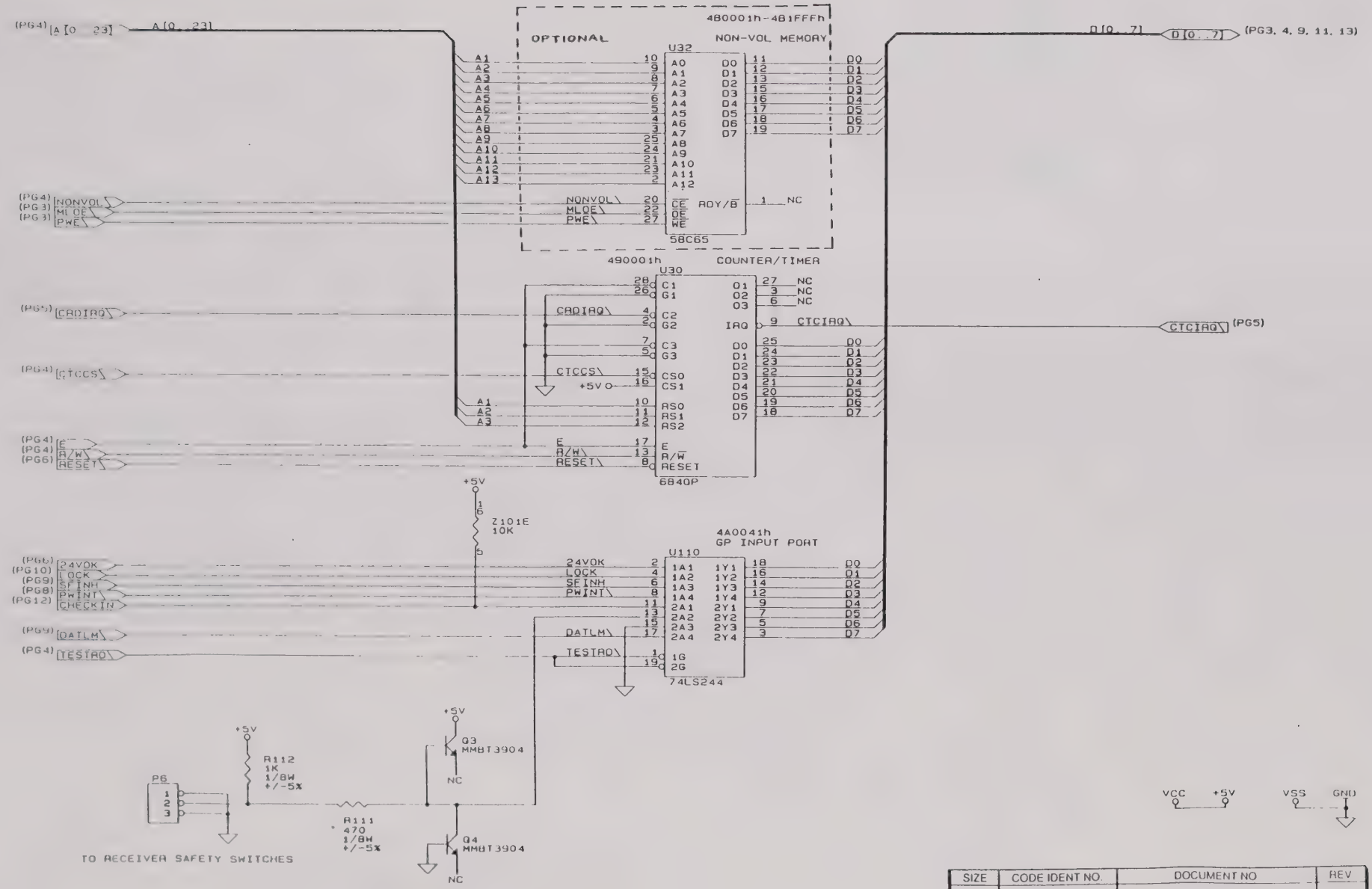

SIZE	CODE IDENT NO.	DOCUMENT NO	REV
B	21793	431901	A
SCALE		SHEET 7 OF 13	

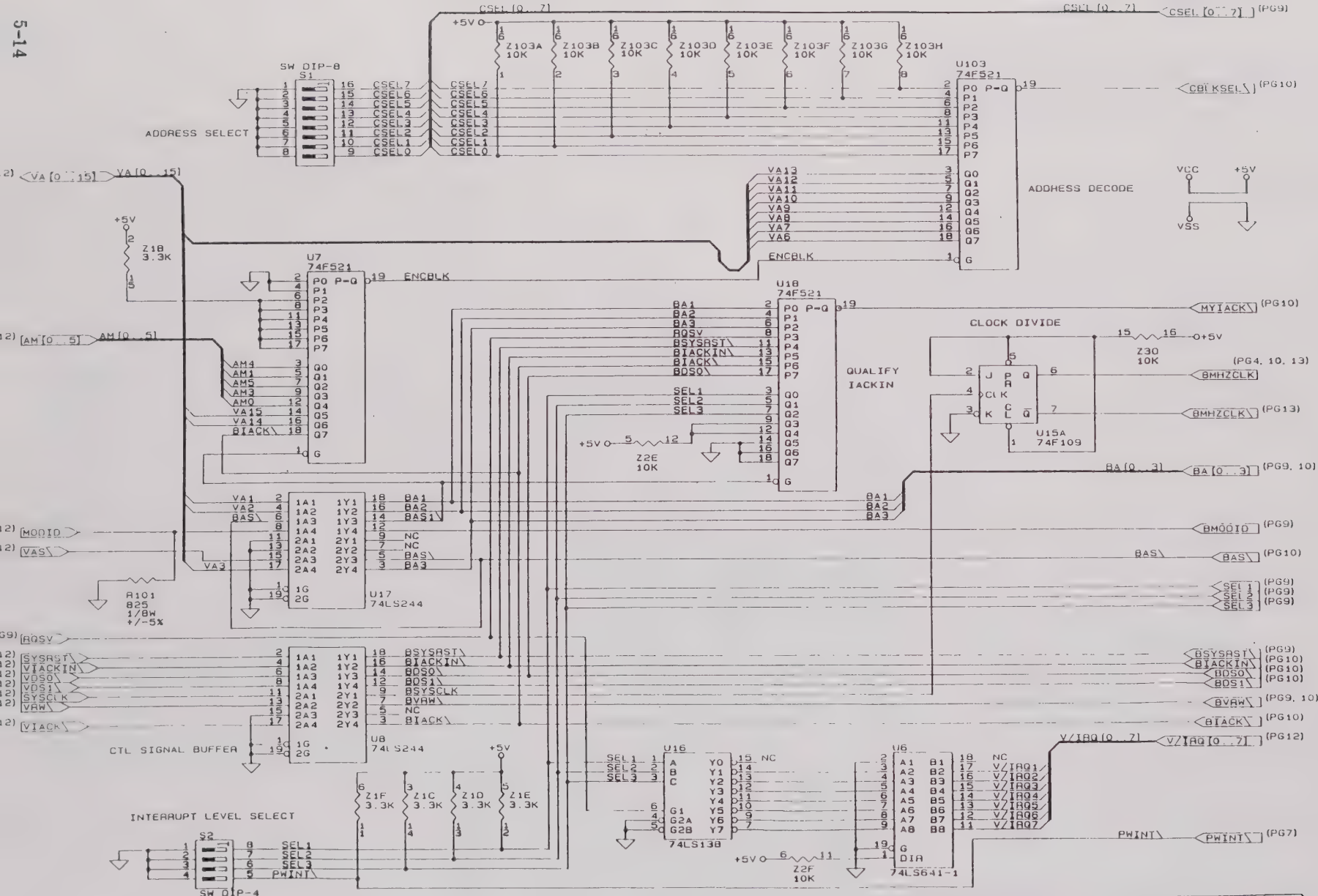

SIZE	CODE IDENT NO.	DOCUMENT NO	REV
B	21793	431901	A
SCALE		SHEET 8 OF 13	

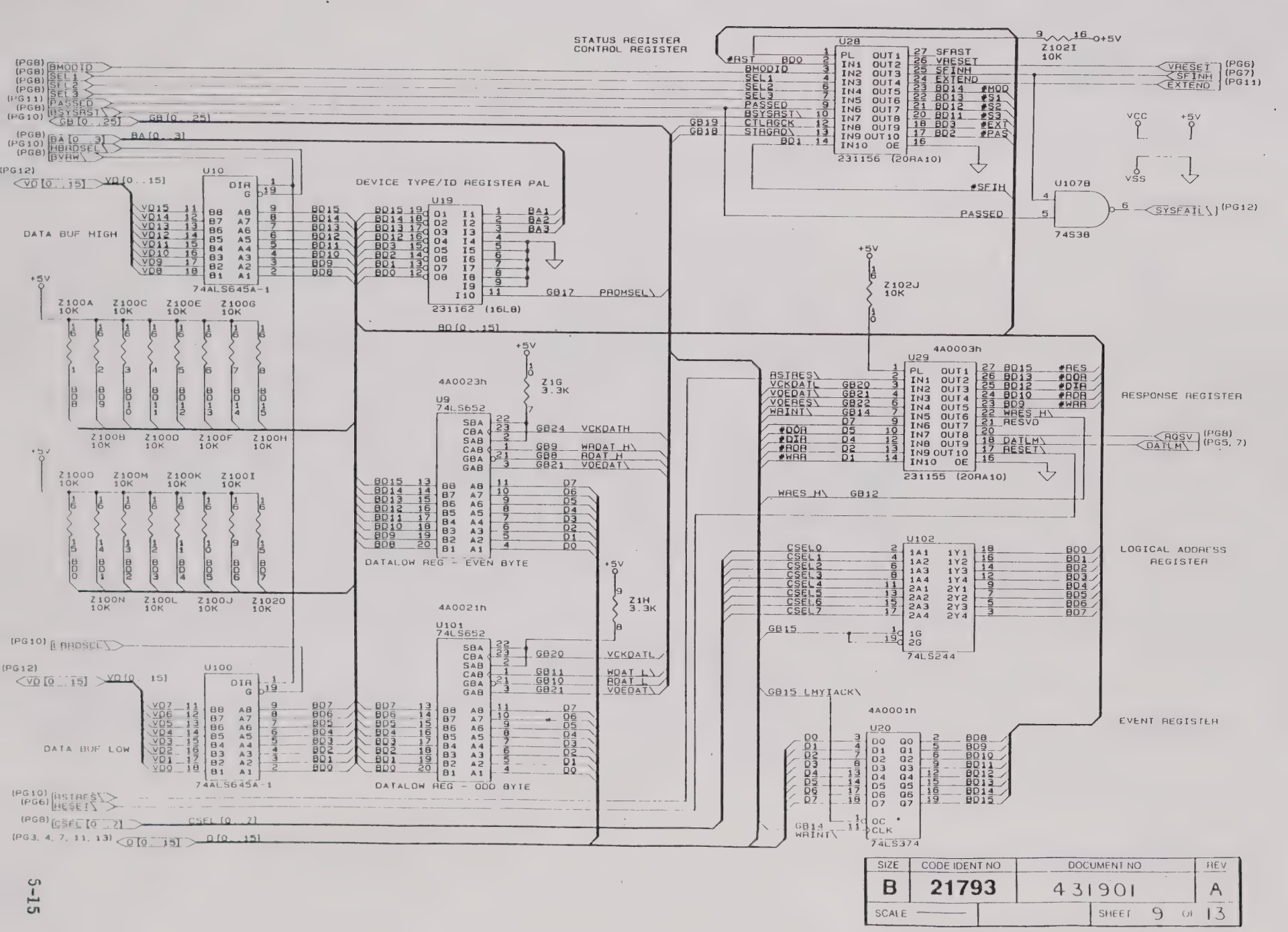

SIZE	CODE IDENT NO	DOCUMENT NO	REV
B	21793	431901	A
SCALE		SHEET 9 OF 13	

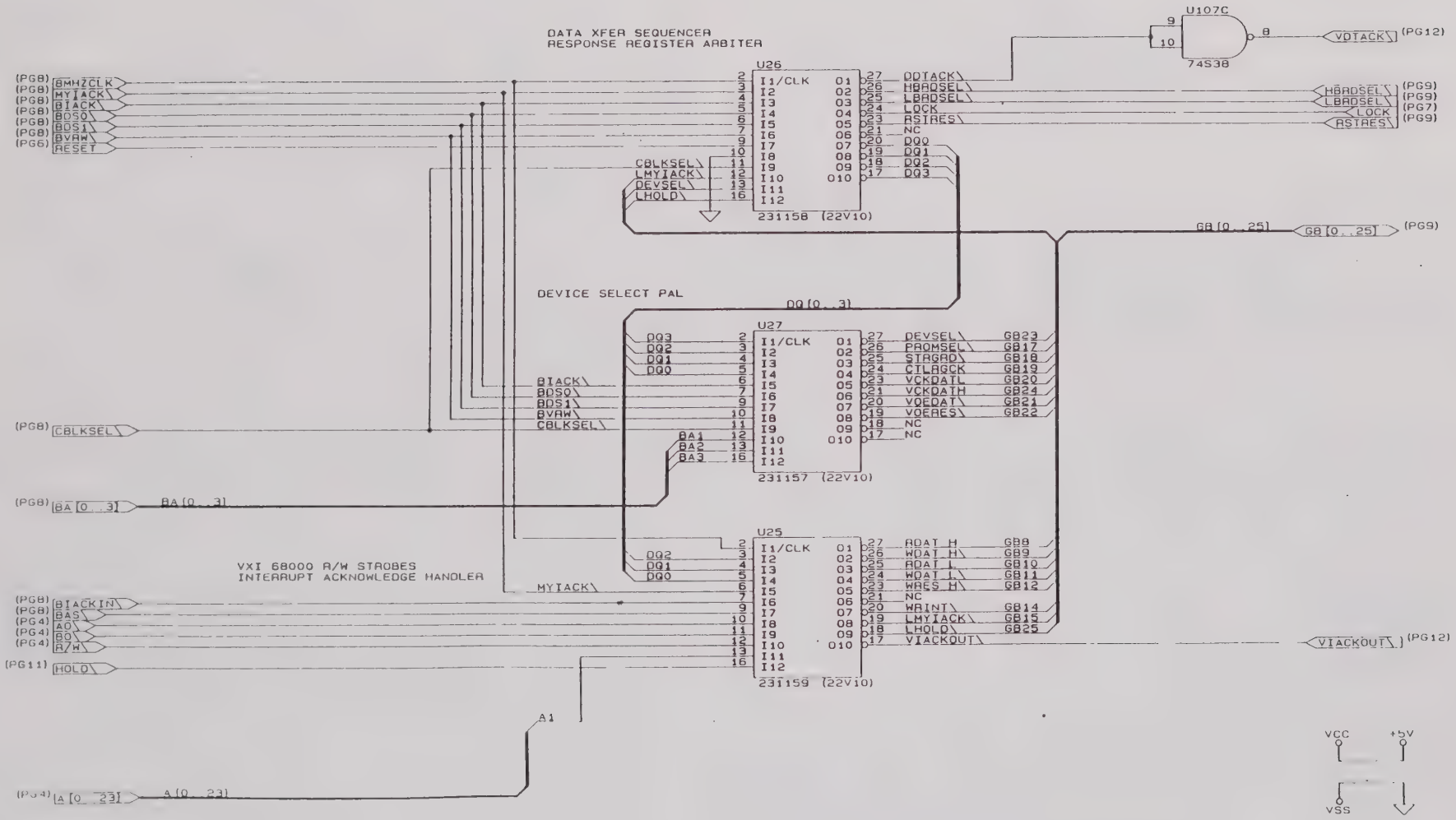

SIZE	CODE IDENT NO	DOCUMENT NO	REV
B	21793	431901	A
SCALE		SHEET 10 OF 13	

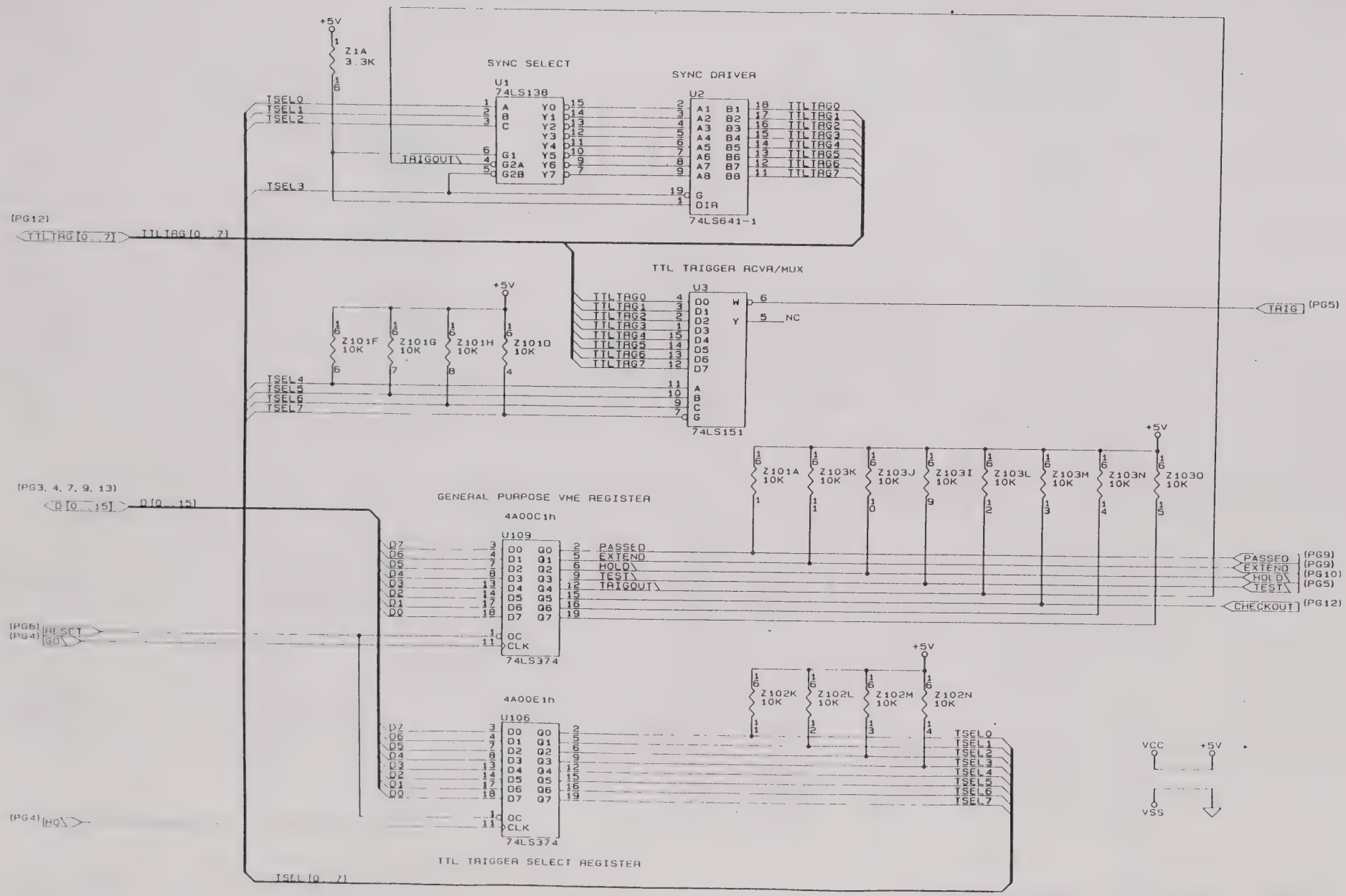

SIZE	CODE IDENT NO	DOCUMENT NO	REV
B	21793	431901	A
SCALE		SHEET 11 OF 13	

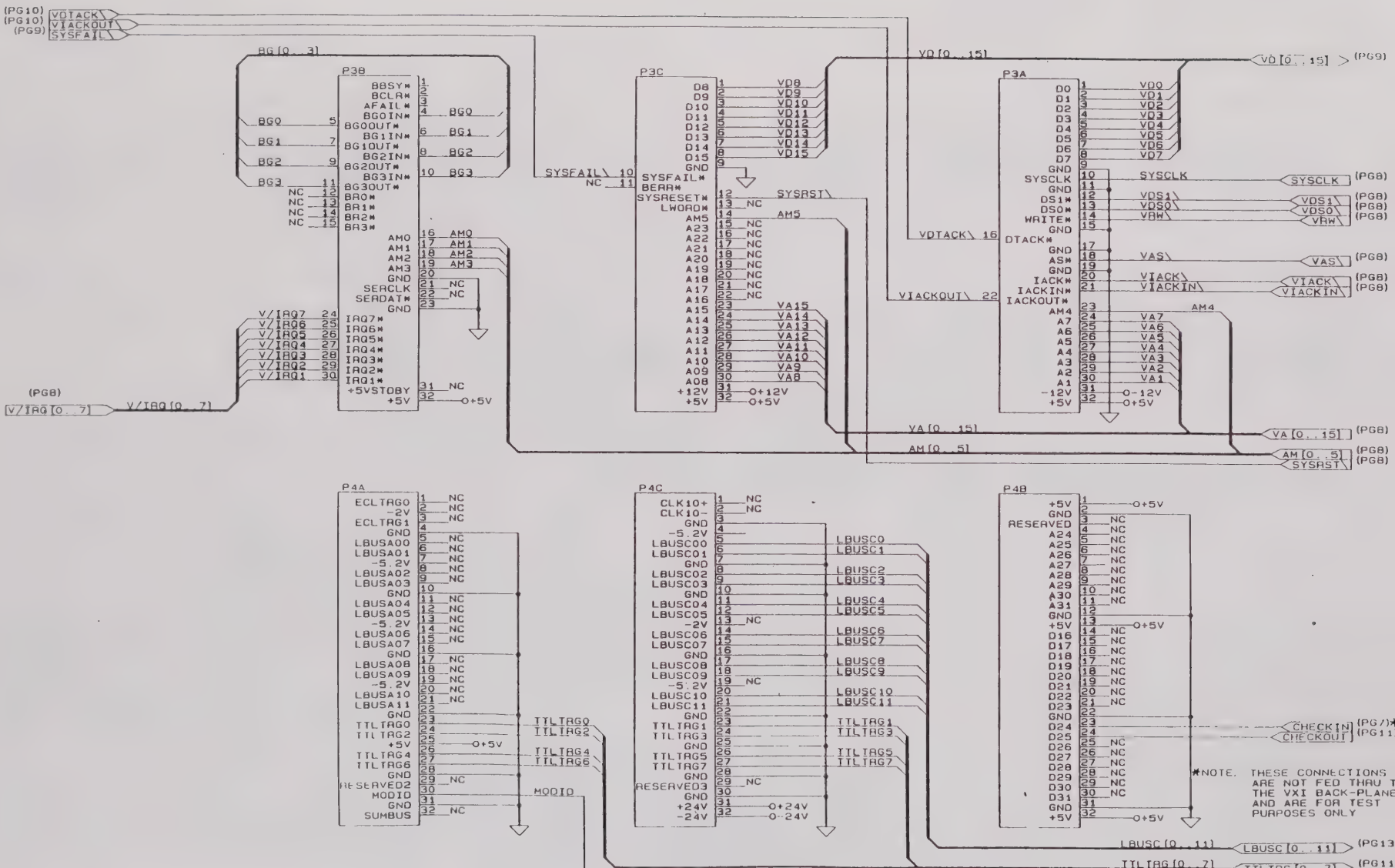

SIZE	CODE IDENT NO	DOCUMENT NO	REV
B	21793	431901	A
SCALE		SHEET 12 OF 13	

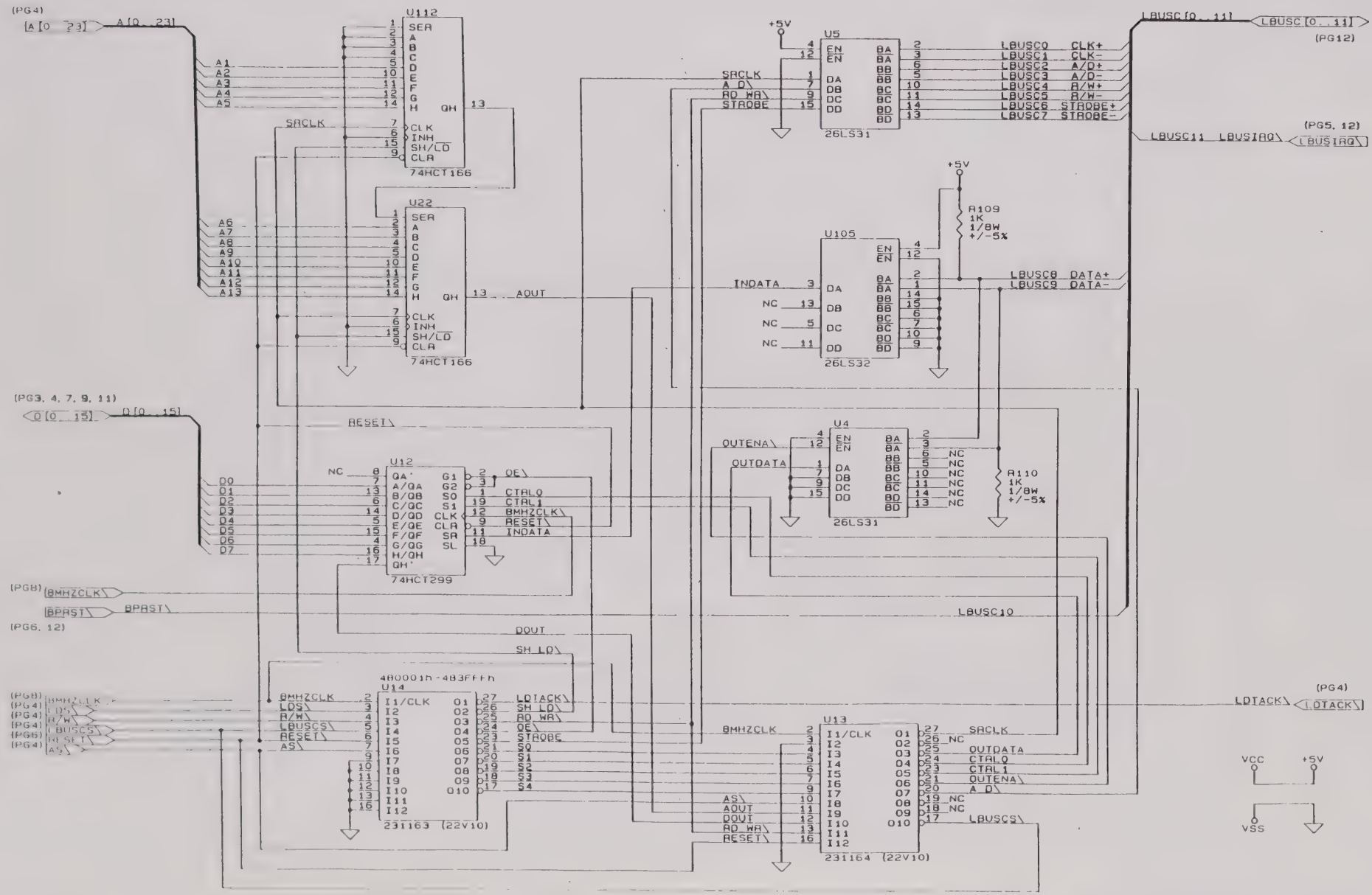

SIZE	CODE IDENT NO	DOCUMENT NO	REV
B	21793	431901	A
SCALE		SHEET 13 OF 13	

401901 PCB ASSY., 1260 MASTER CPU (OPT.01)

REF DESIG	RACAL-DANA P/N	DESCRIPTION	FSC	MANUFACTURER'S P/N
C1	110126	CAP, TANTA, 6.8UF, 35V, 20 PERCENT	05397	T355F685M035A5
C2	110143	CAP, TANTA, * UF, 35V, 20 PERCENT	05397	T355A105M035AS
C100-C12	R-21-1801	CAP, CHIP, 10 NF	95275	VJ1206Y103MF
CR1	211083	DIODE, SILICON	81349	1N916B
P3A	601858	CONNECTOR, PCB, PLUG, 32PIN	52072	CAS32MPF1B
P3B	601858	CONNECTOR, PCB, PLUG, 32PIN	52072	CAS32MPF1B
P3C	601858	CONNECTOR, PCB, PLUG, 32PIN	52072	CAS32MPF1B
P4A	601858	CONNECTOR, PCB, PLUG, 32PIN	52072	CAS32MPF1B
P4B	601858	CONNECTOR, PCB, PLUG, 32PIN	52072	CAS32MPF1B
P4C	601858	CONNECTOR, PCB, PLUG, 32PIN	52072	CAS32MPF1B
P5	601710-003	CONNECTOR, RT.ANGLE, SINGLE ROW, 3P	52072	CA-S03R-23B09
P6	601710-003	CONNECTOR, RT.ANGLE, SINGLE ROW, 3P	52072	CA-S03R-23B09
Q1	200320	TRANSISTOR, NPN	04713	MMBT3904
Q2	200295	TRANSISTOR, N-CHAN, MOSFET	17856	VN10KM
Q3	200320	TRANSISTOR, NPN	04713	MMBT3904
Q4	200320	TRANSISTOR, NPN	04713	MMBT3904
Q100	200320	TRANSISTOR, NPN	04713	MMBT3904
R100	050000-102	RES, CHIP, 1K, .06W, 5PCT	91637	CRCW0805SERIES
R101	050038	RES, CHIP, 825 OHM, 1/8W, 5PCT	65940	MCR18825J
R102	050039	RES, CHIP, 1.24K, 1/8W, 1PCT	65940	MCR181.24KFW
R103	050000-102	RES, CHIP, 1K, .06W, 5PCT	91637	CRCW0805SERIES
R104	R-20-5764	RES, CHIP, 100 OHM, 1/8W, 5 PCT	65940	MCR18100OHM5PCT
R105	050040	RES, CHIP, 6.04K, 1/8W, 1PCT	65940	MCR186.04KFW
R106	050000-102	RES, CHIP, 1K, .06W, 5PCT	91637	CRCW0805SERIES
R107	050047	RES, CHIP, 2.21K, .06W, 1PCT	56235	50705CPX2211F30
R108	R-20-5787	RES, CHIP, 330 OHM,1/8W,5 PCT,200V	65940	MCR18330OHM5PCT
R109	R-20-5792	RES, CHIP, 1K, 1/8W,5 PCT,200V	65940	MCR18-1K-5 PCT
R110	R-20-5792	RES, CHIP, 1K, 1/8W,5 PCT,200V	65940	MCR18-1K-5 PCT
R111	R-20-5765	RES, CHIP, 470 OHM, 1/8W, 5 PCT	65940	MCR18470OHM5PCT
R112	R-20-5792	RES, CHIP, 1K, 1/8W,5 PCT,200V	65940	MCR18-1K-5 PCT
S1	601699	SWITCH, DIP, 8 POS, LOW PROFILE	71450	207-8-LPST
S2	601859	SWITCH, DIP, 4 POS	11237	2074LPST
U1	231094	IC, DEMUX DECODER	18324	N74LS138D
U2	231122	IC, SOIC	01295	SN74LS641-1DW
U3	231123	IC, MULTIPLEXER	18324	74LS151D
U4	231125	IC, DIGITAL, LINE DRIVER	27014	DS26LS31MN
U5	231125	IC, DIGITAL, LINE DRIVER	27014	DS26LS31MN
U6	231122	IC, SOIC	01295	SN74LS641-1DW
U7	230986	IC,8-BIT COMPARATOR	07263	74F521SC
U8	231092	IC, TRI-STATE BUFFER	18324	74LS244D
U9	231118	IC, DIGITAL BUFFER	01295	SN74LS652DW
U10	231129	IC, OCTAL BUS TRANSCEIVERS	18324	N74LS645-1D
U11	231093	IC, QUAD COMPARATOR	04713	LM339D
U12	231119	IC, SHIFT REGISTER	18324	74HCT299D
U13	231164	MEMORY	21793	231164
U14	231163	MEMORY	21793	231163
U15	230980	IC,DUAL JK POS EDGE-TRIG F-F	07263	74F109SC
U16	231094	IC, DEMUX DECODER	18324	N74LS138D
U17	231092	IC, TRI-STATE BUFFER	18324	74LS244D
U18	230986	IC,8-BIT COMPARATOR	07263	74F521SC
U19	231162	MEMORY	21793	231162
U20	231124	IC, FLIP-FLOP	18324	N74LS374D
U21	231121	IC, QUADRUPLE 2-INPUT POS-OR GATE	01295	SN74HC32D
U22	231120	IC, 8-BIT, PARALLEL/SERIAL OUT S.R.	18324	74HCT166D
U23	231161	MEMORY	21793	231161
U24	231160	MEMORY	21793	231160
U25	231159	MEMORY	21793	231159
U26	231158	MEMORY	21793	231158
U27	231157	MEMORY	21793	231157

401901 PCB ASSY., 1250 MASTER CPU (OPT.01)

REF DESIG	RACAL-DANA P/N	DESCRIPTION	FSC	MANUFACTURER'S P/N
U28	231156	MEMORY	21793	231156
U29	231155	MEMORY	21793	231155
U30	230780	IC, COUNTER TIMER	04713	MC6840P
U31	231135	IC, MICROPROCESSING UNIT	62786	HD68C00CP-8
U32	231146	IC, MEMORY, EEPROM	21793	231146
U33	231166	MEMORY	21793	231166
U34	231167	MEMORY	21793	231167
U100	231129	IC, OCTAL BUS TRANSCEIVERS	18324	N74LS645-1D
U101	231118	IC, DIGITAL BUFFER	01295	SN74LS652DW
U102	231092	IC, TRI-STATE BUFFER	18324	74LS244D
U103	230986	IC,8-BIT COMPARATOR	07263	74F521SC
U104	231127	IC, FLIP-FLOP	04713	SN74LS74AD
U105	231096	IC, QUAD DIFF RECEIVER	01295	AM26LS32ACD
U106	231124	IC, FLIP-FLOP	18324	N74LS374D
U107	231126	IC, NAND GATE	18324	74S38D
U108	231128	IC, ENCODER	01295	SN74LS148D
U109	231124	IC, FLIP-FLOP	18324	N74LS374D
U110	231092	IC, TRI-STATE BUFFER	18324	74LS244D
U111	231093	IC, QUAD COMPARATOR	04713	LM339D
U112	231120	IC, 8-BIT, PARALLEL/SERIAL OUT S.R.	18324	74HCT166D
U113	231094	IC, DEMUX DECODER	18324	N74LS138D
U114	231137	IC, MEMORY	21793	231137
U115	231137	IC, MEMORY	21793	231137
VR1	230951	IC, 1.2V MICRO PWR V REF DIODE	27014	LM385BM-1.2
Z1	080121	RES, NETWORK, 3.3K, 16P, 8R	11236	767-163R33KS
Z2	080116	RES NETWORK, 16P8R, 10K	73138	628-AL-103J
Z3	080120	RES NETWORK, 10K	11236	767-161R10K
Z4	080119	RES NETWORK, 220K	91637	SOMC-1603-224K
Z100-Z103	080120	RES NETWORK, 10K	11236	767-161R10K
{65}1	411901	PCB OPTION 01 (UNLOADED)	21793	411901
{69}A/R	500022	WIRE, BARE COPPER/TIN, 22 GA	21793	500022
{71}1	601277	IC SOCKET, 28-PIN	06776	ICA-286-S-TG
{76}1	601715	SOCKET, CHIP CARRIER, 68 PIN	09922	Q1LE68P-410T
{77}4	601735-016	CONNECTOR, PCB, RECEPT, 16 PIN	55322	SL116G32
{92}3	610257	STANDOFF, SWAGE, 1/4D, 4-40 X .31	06540	9534BB04403A
{93}1	404782	CABLE ASSY., LED FAIL	21793	404782

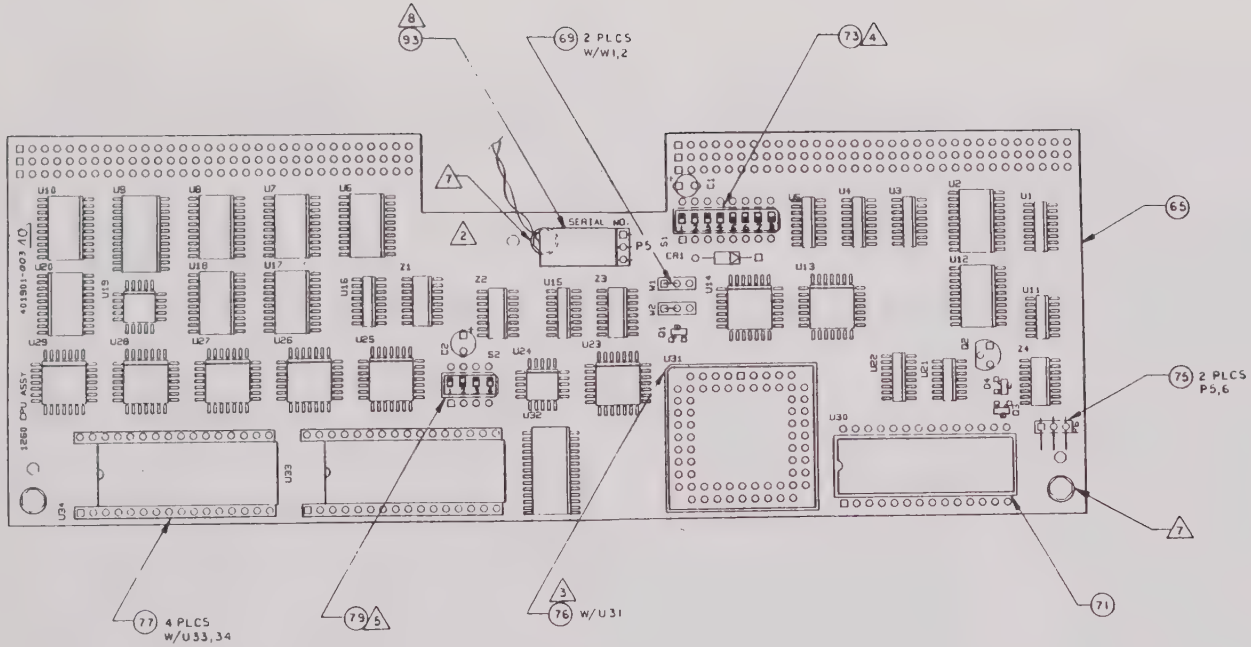

COMPONENT SIDE

10. INKSTAMP DASH ASSY NUMBER AND CURRENT REV. ON COMPONENT SIDE IN INDICATED AREA.
9. ALL COMPONENTS MUST NOT EXCEED THE HEIGHT OF .37" ABOVE THE COMPONENT SIDE OF BOARD.

8. INSTALL CABLE ASSY (ITEM 93) INTO P5 (ITEM 75)
7. INSTALL STANDOFF (ITEM 92) BEFORE P5,6 (ITEM 75)
6. REFERENCE DESIGNATORS RANGE FROM 1 TO 99 FOR THE COMPONENT SIDE AND FROM 100 TO 199 FOR THE SOLDER SIDE OF THE PCB

5. ITEM 79, S2, SWITCHES 1,3,4 ARE "ON" POSITION, SWITCH 2 IS "OFF" POSITION.
4. ITEM 73, S1, SWITCHES 1,2,3,4 ARE "ON" POSITION, SWITCHES 5,6,7,8 ARE "OFF" POSITION
3. NOTE POSITION OF ANGLE ON SOCKET OF U31
2. INK STAMP SERIAL NUMBER ON COMPONENT SIDE IN INDICATED AREA
1. REFERENCE SCHEMATIC 431901-003.

NOTES: UNLESS OTHERWISE SPECIFIED

PROPRIETARY NOTICE
THIS DOCUMENT AND THE TECHNICAL DATA HEREON DISCLOSED ARE PROPRIETARY TO RACAL DANA INSTRUMENTS INC AND SHALL NOT WITHOUT EXPRESS WRITTEN PERMISSION OF RACAL DANA INSTRUMENTS INC. BE USED, RELEASED OR DISCLOSED IN WHOLE OR IN PART, OR USED TO SOLICIT QUOTATIONS FROM A COMPETITIVE SOURCE OR USED FOR MANUFACTURE BY ANYONE OTHER THAN RACAL DANA INSTRUMENTS INC. THE INFORMATION HEREON HAS BEEN DEVELOPED AT PRIVATE EXPENSE AND MAY ONLY BE USED FOR PURPOSES OF ENGINEERING EVALUATION AND FOR INCORPORATION INTO TECHNICAL SPECIFICATIONS AND OTHER DOCUMENTS WHICH SPECIFY PROCUREMENT OF PRODUCTS FROM RACAL DANA INSTRUMENTS INC

RACAL-DANA Instruments Inc.			
4 GOODYEAR, IRVINE, CALIFORNIA 92714			
DOCUMENT TITLE			
PCB ASSY, 1260 MASTER CPU			
SIZE	CODE IDENT NO	DOCUMENT NO	REV
D	21793	401901-003	F
SCALE 2:1		SHEET 1 OF 4	

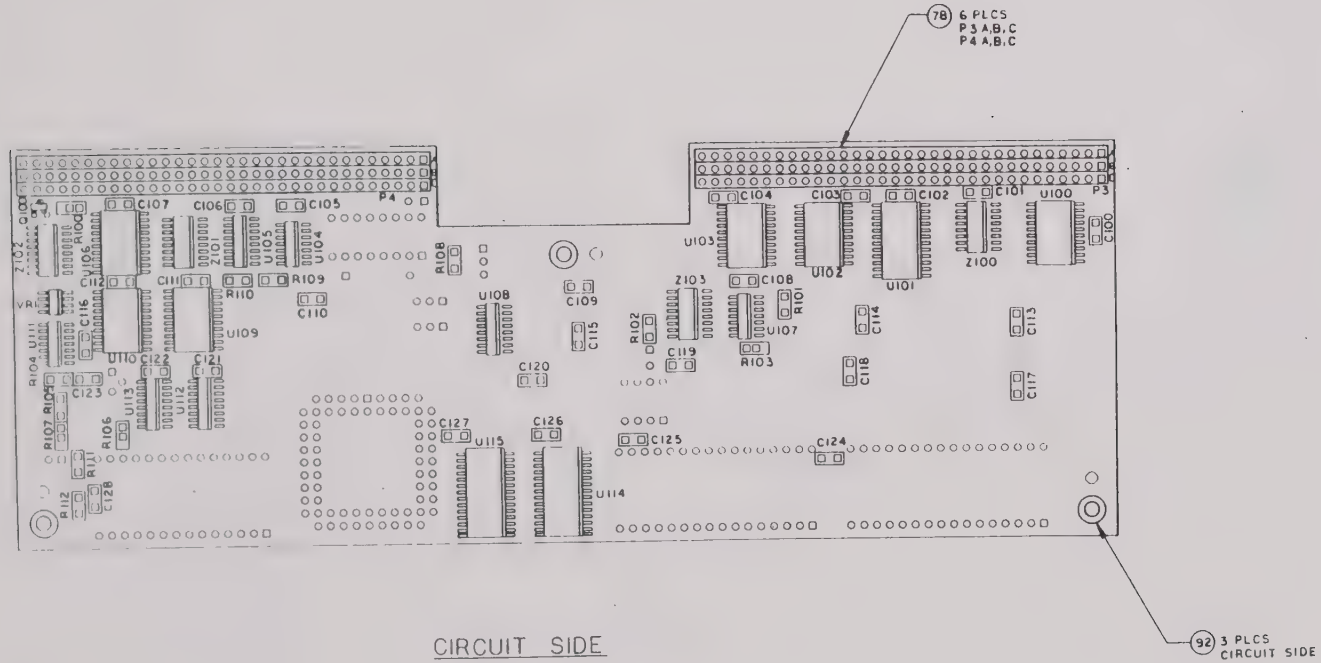

CIRCUIT SIDE

SIZE	CODE IDENT NO	DOCUMENT NO	REV
D	21793	401901-003	B
SCALE 2:1		SHEET 2 OF 4	

REF DES	IC TYPE	+5V PIN NO	GND PIN NO
U114, 115	62256	28	14
U108	74LS148	16	8
U107	74S38	14	7
U105	26LS32	16	8
U104	74LS74	14	7
U34	231167 (27512)	30, 32	16
U33	231166 (27512)	30, 32	16
U32	58C65	28	14
U31	MC68000CP-8	14, 52	16, 17, 56, 57
U30	6840P	14	1
U29	231155 (20RA10)	28	15
U28	231156 (20RA10)	28	15
U27	231157 (22V10)	28	14
U26	231158 (22V10)	28	14
U25	231159 (22V10)	28	14
U24	231160 (16L8)	20	10
U23	231161 (22V10)	28	14

IC POWER CONNECTIONS

REF. DES.	IC TYPE	+5V PIN NO	GND PIN NO.
U22, 112	74HCT166	16	8
U21	74HC32	14	7
U20, 106, 109	74LS374	20	10
U19	231162 (16L8)	20	10
U15	74F109	16	8
U14	231163 (22V10)	28	14
U13	231164 (22V10)	28	14
U12	74HCT299	20	10
U11, 111	LM339	3	12
U10, 100	74ALS645A-1	20	10
U9, 101	74LS652	24	12
U8, 17, 102, 110	74LS244	20	10
U7, 18, 103	74F521	20	10
U4, 5	26LS31	16	8
U3	74LS151	16	8
U2, 6	74LS641-1	20	10
U1, 16, 113	74LS138	16	8

IC POWER CONNECTIONS

HIGHEST REF. DES
Z4, 103
W2
VR1
S2
U34, 115
R112
Q4, 100
P6
CR1
C2, 128

4. REFERENCE DESIGNATORS RANGE FROM 1 TO 99 FOR THE COMPONENT SIDE AND FROM 100 TO 199 FOR THE SOLDER SIDE OF THE PCB
3. RESISTOR VALUES ARE IN OHMS.
2. CAPACITOR VALUES ARE IN MICROFARADS, +/-20%, 50V UNLESS OTHERWISE SPECIFIED.
1. RESISTOR NETWORKS ARE IN OHMS, +/-2%

NOTES UNLESS OTHERWISE SPECIFIED

PROPRIETARY NOTICE

THIS DOCUMENT AND THE TECHNICAL DATA HEREON DISCLOSED ARE PROPRIETARY TO RACAL DANA INSTRUMENTS INC. AND SHALL NOT WITHOUT EXPRESS WRITTEN PERMISSION OF RACAL DANA INSTRUMENTS INC. BE USED, RELEASED OR DISCLOSED IN WHOLE OR IN PART OR USED TO SOLICIT QUOTATIONS FROM A COMPETITIVE SOURCE OR USED FOR MANUFACTURE BY ANYONE OTHER THAN RACAL DANA INSTRUMENTS INC. THE INFORMATION HEREON HAS BEEN DEVELOPED AT PRIVATE EXPENSE AND MAY ONLY BE USED FOR PURPOSES OF ENGINEERING EVALUATION AND FOR INCORPORATION INTO TECHNICAL SPECIFICATIONS AND OTHER DOCUMENTS WHICH SPECIFY PROCUREMENT OF PRODUCTS FROM RACAL DANA INSTRUMENTS INC.

RACAL-DANA Instruments Inc.
4 GOODYEAR, IRVINE CALIFORNIA 92714

DOCUMENT TITLE

SCHEM.,1260 MASTER CPU

SIZE	CODE IDENT NO	DOCUMENT NO	REV
B	21793	431901-003	A

SCALE ——— SHEET 1 OF 13

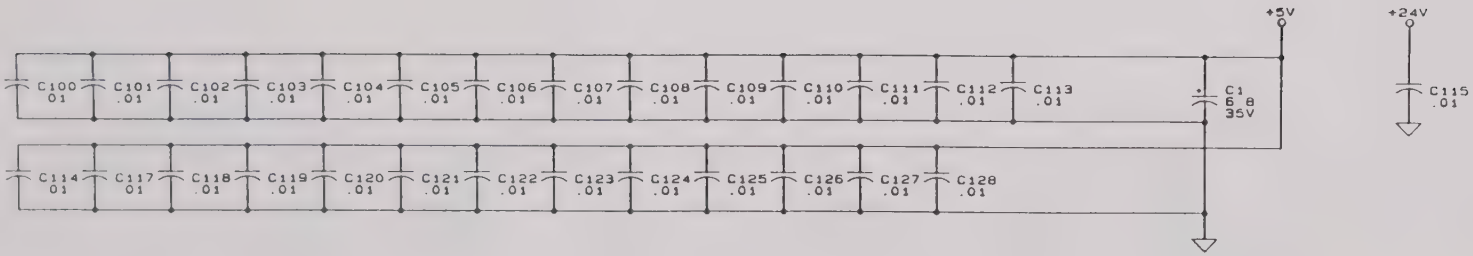

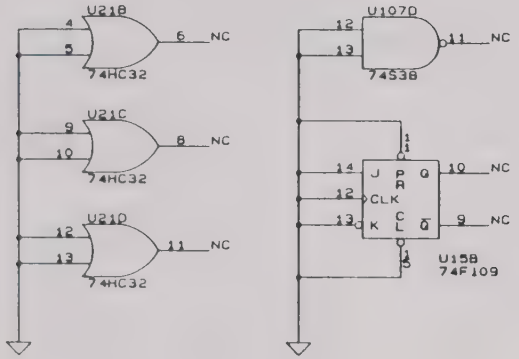

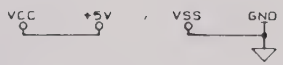

SIZE	CODE IDENT NO	DOCUMENT NO	REV
B	21793	431901-003	A
SCALE		SHEET 2 OF 13	

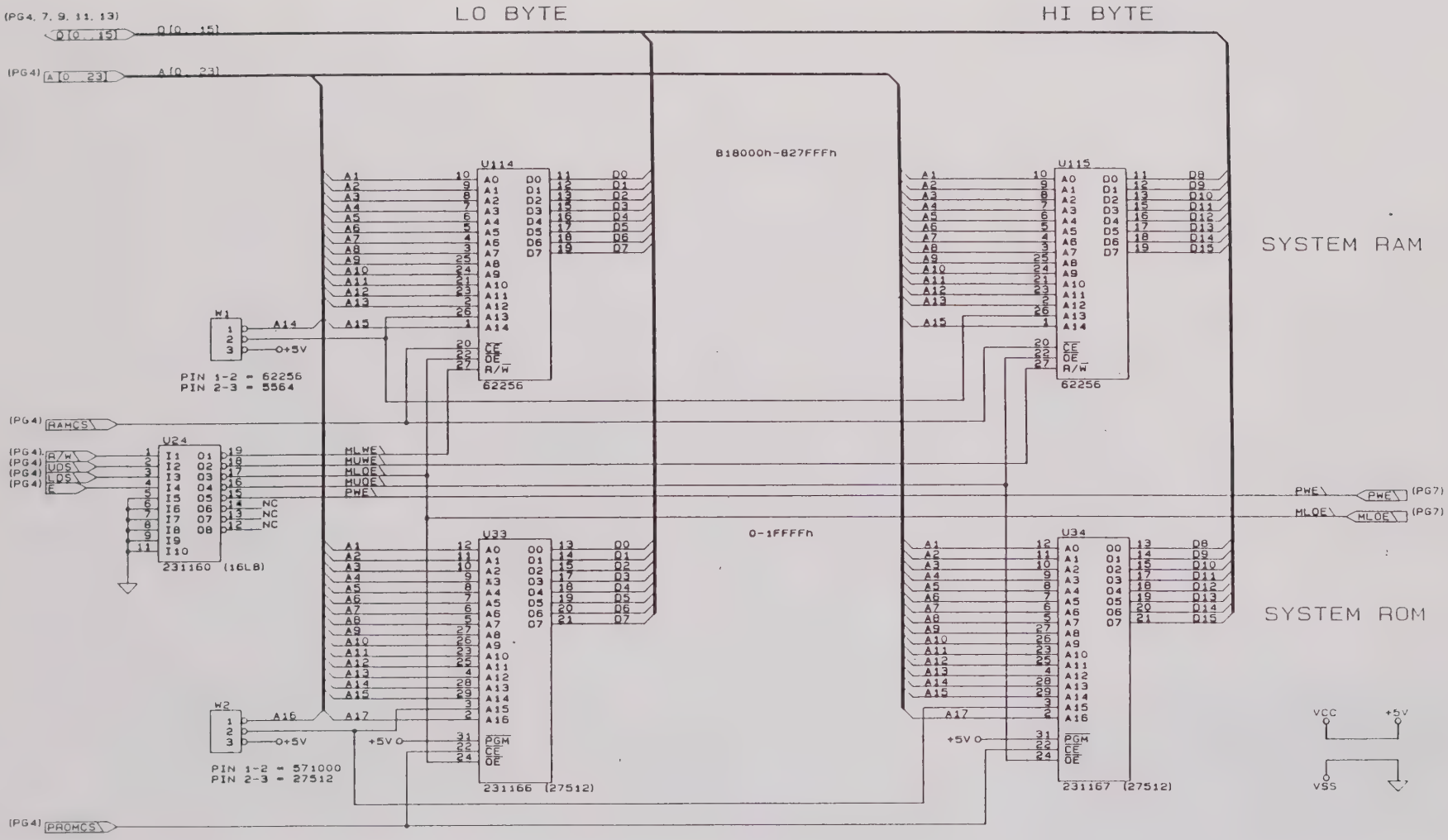

SIZE	CODE IDENT NO	DOCUMENT NO	REV
B	21793	431901-003	A
SCALE		SHEET 3 OF 13	

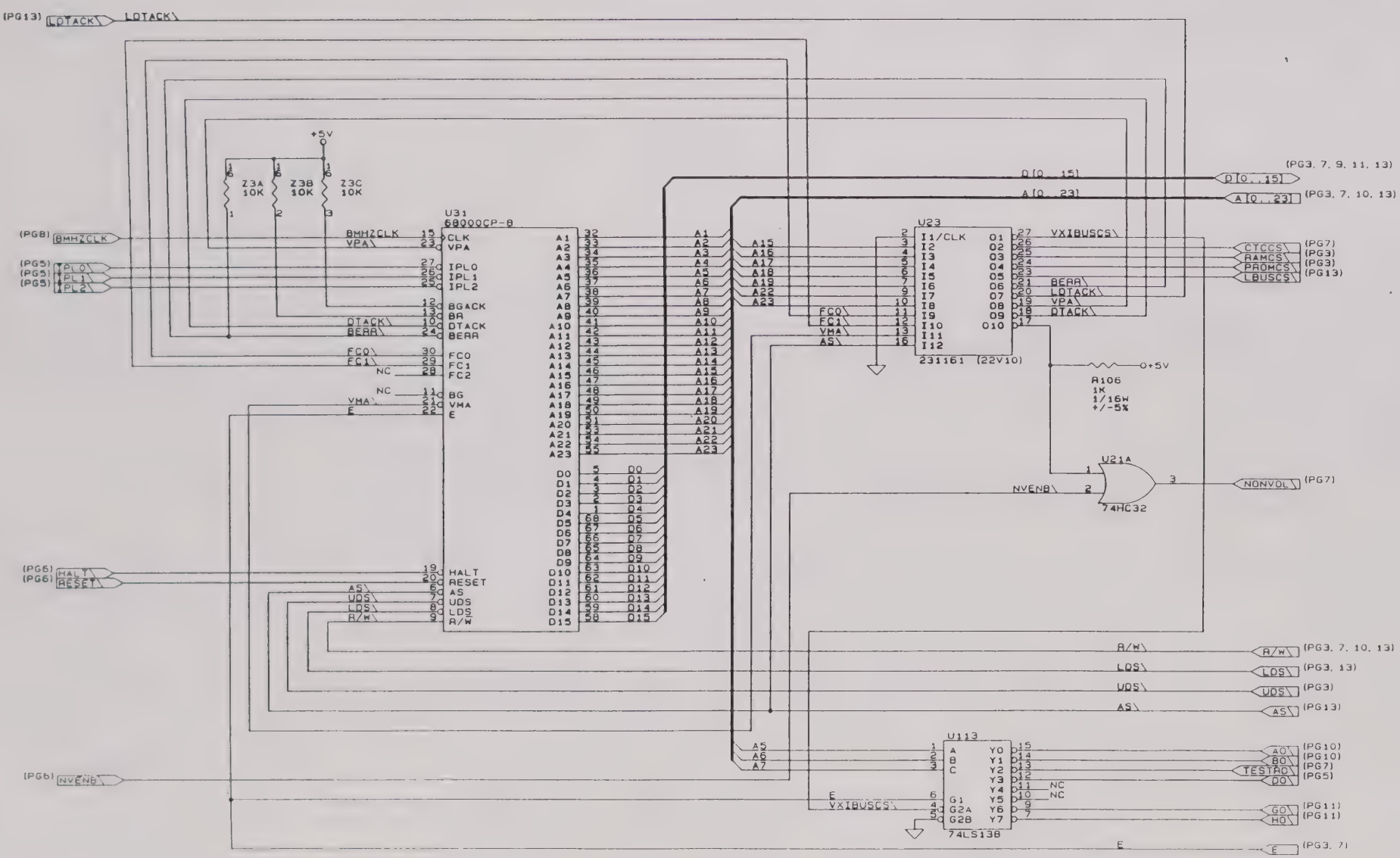

SIZE	CODE IDENT NO	DOCUMENT NO	REV
B	21793	431901-003	A
SCALE		SHEET 4 OF 13	

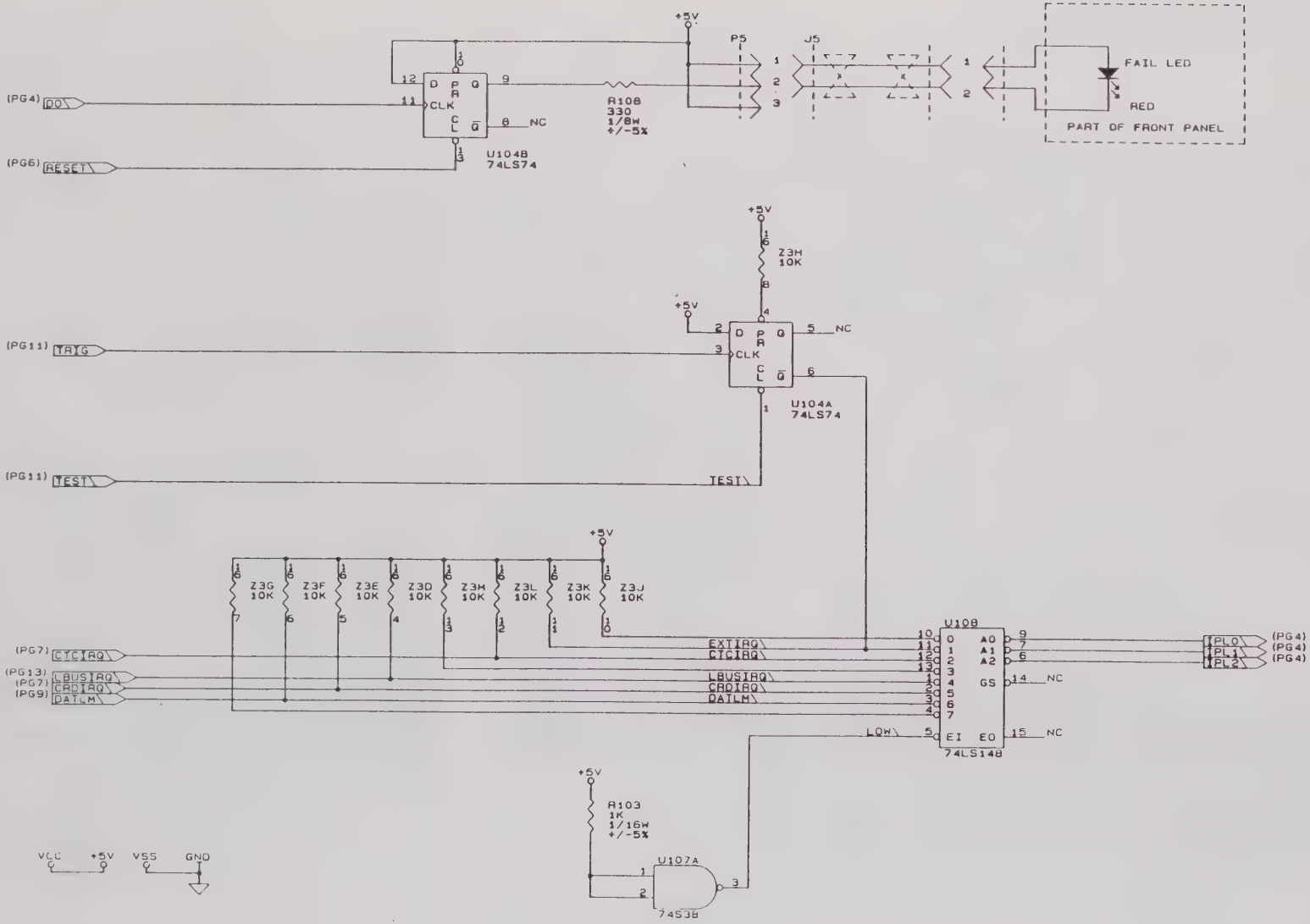

SIZE	CODE IDENT NO	DOCUMENT NO	REV
B	21793	431901-003	A
SCALE		SHEET 5 OF 13	

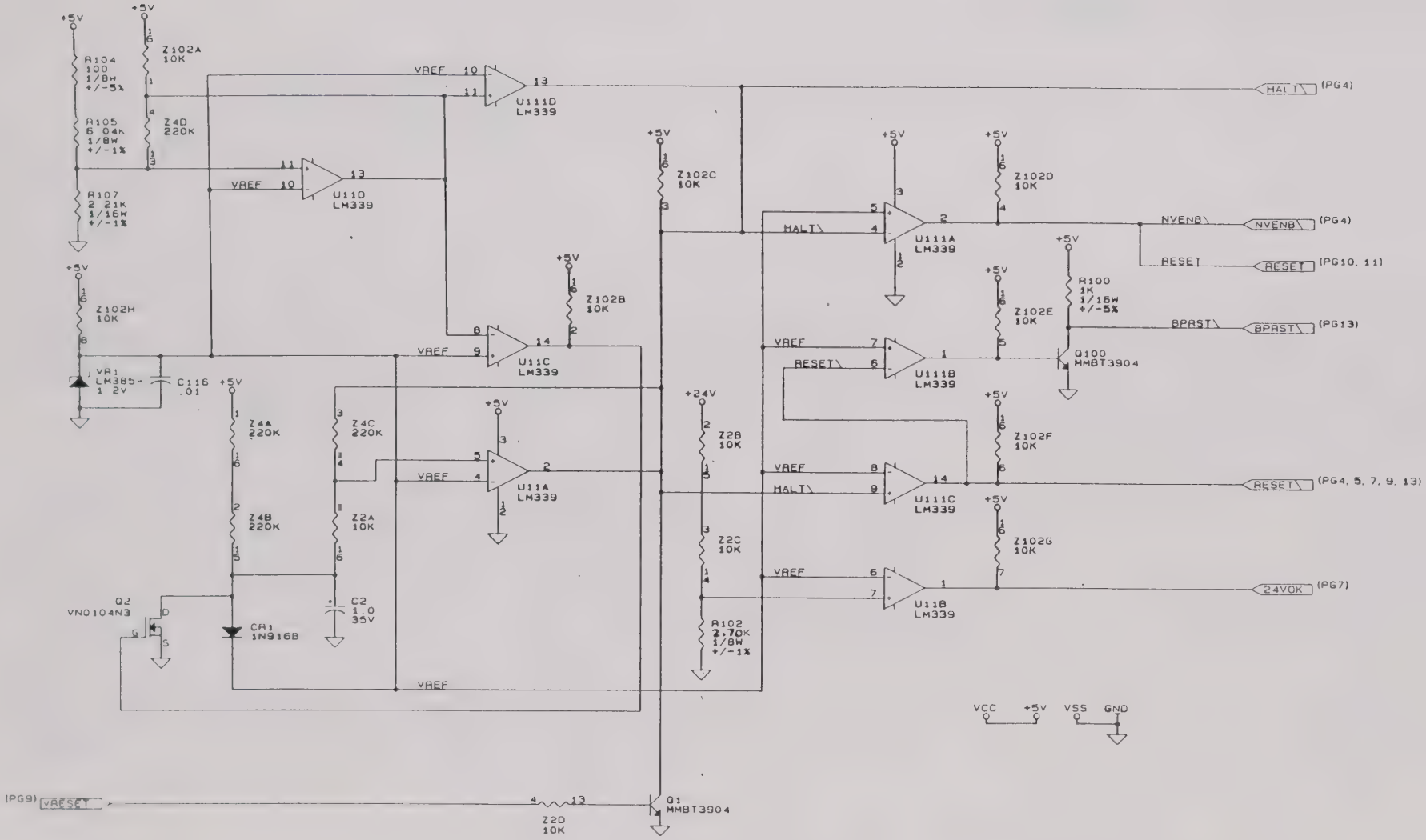

SIZE	CODE IDENT NO	DOCUMENT NO	REV
B	21793	431901-003	A
SCALE		SHEET 6 OF 13	

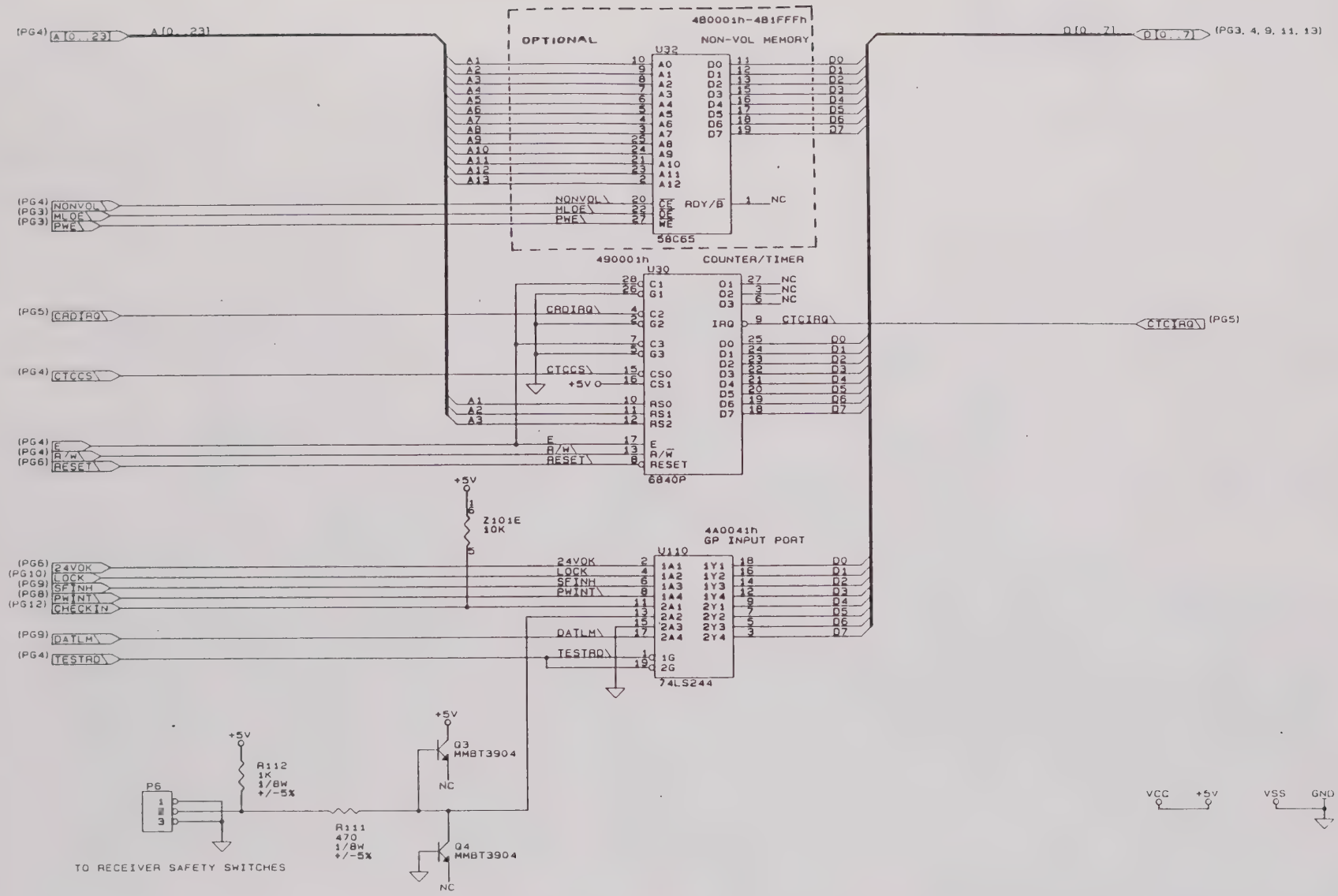

SIZE	CODE IDENT NO	DOCUMENT NO	REV
B	21793	431901-003	A
SCALE		SHEET 7 OF 13	

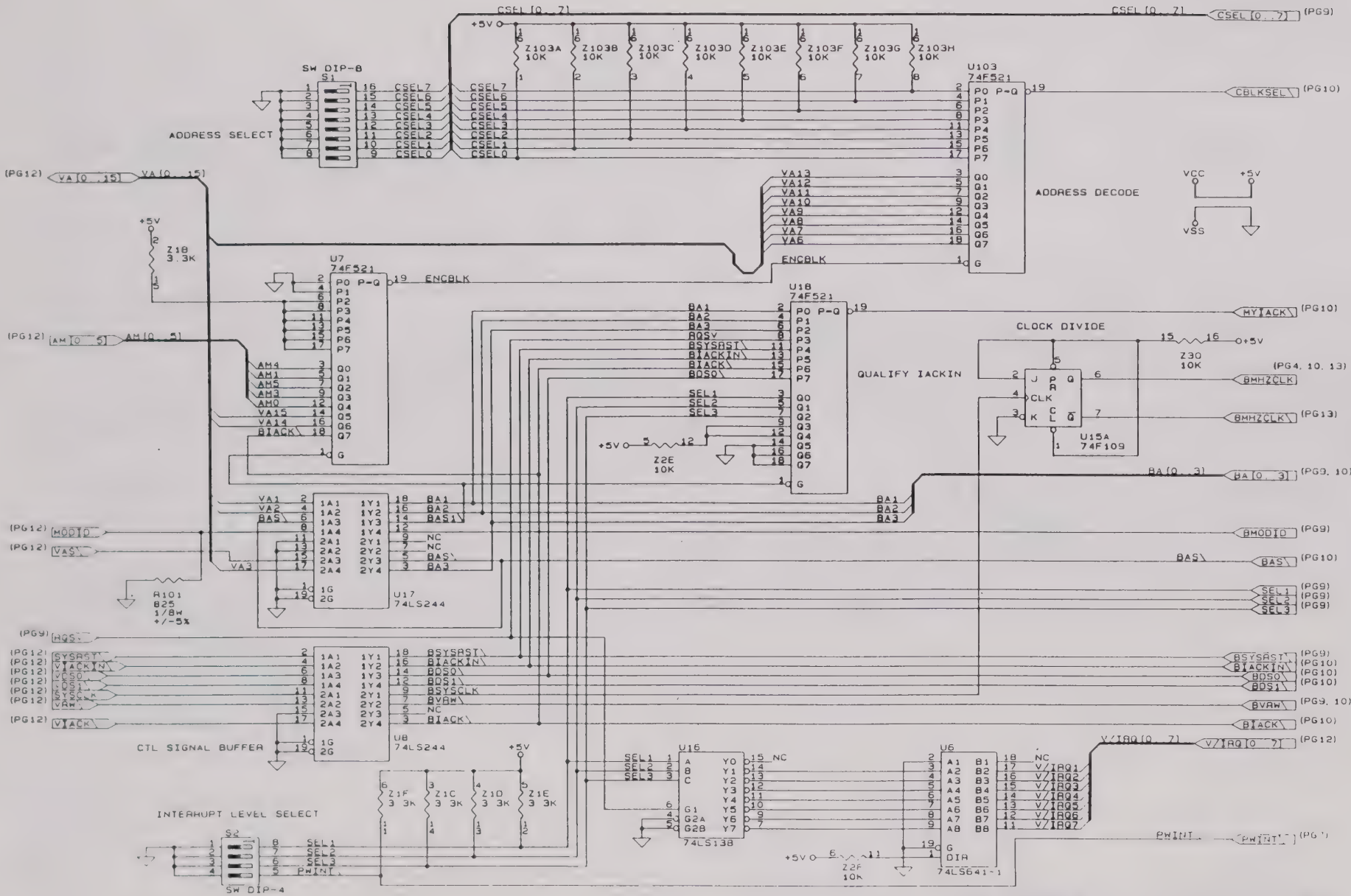

SIZE	CODE IDENT NO	DOCUMENT NO	REV
B	21793	431901-003	A
SCALE		SHEET 8 OF 13	

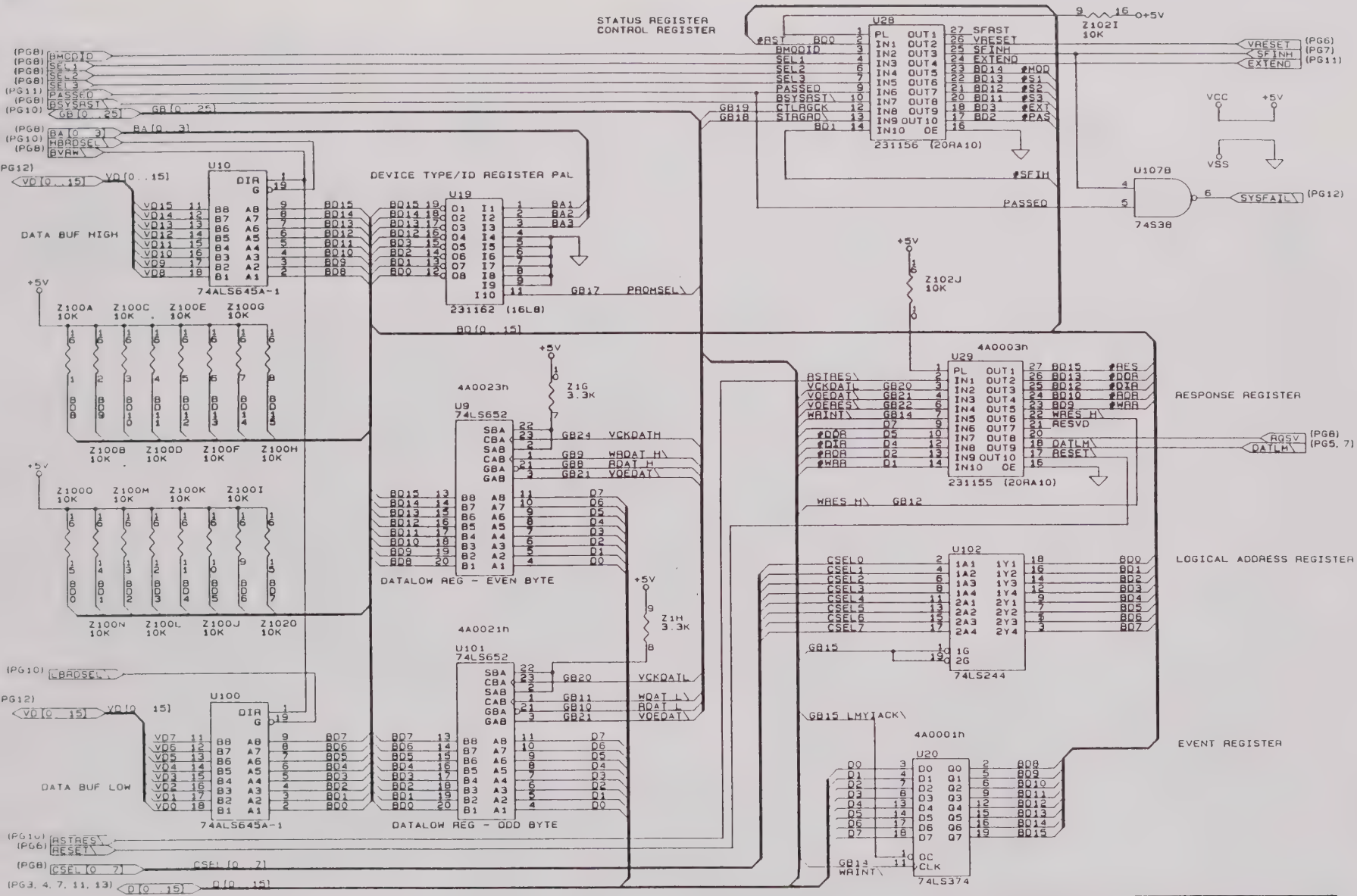

SIZE	CODE IDENT NO	DOCUMENT NO	REV
B	21793	431901-003	A
SCALE		SHEET 9 OF 13	

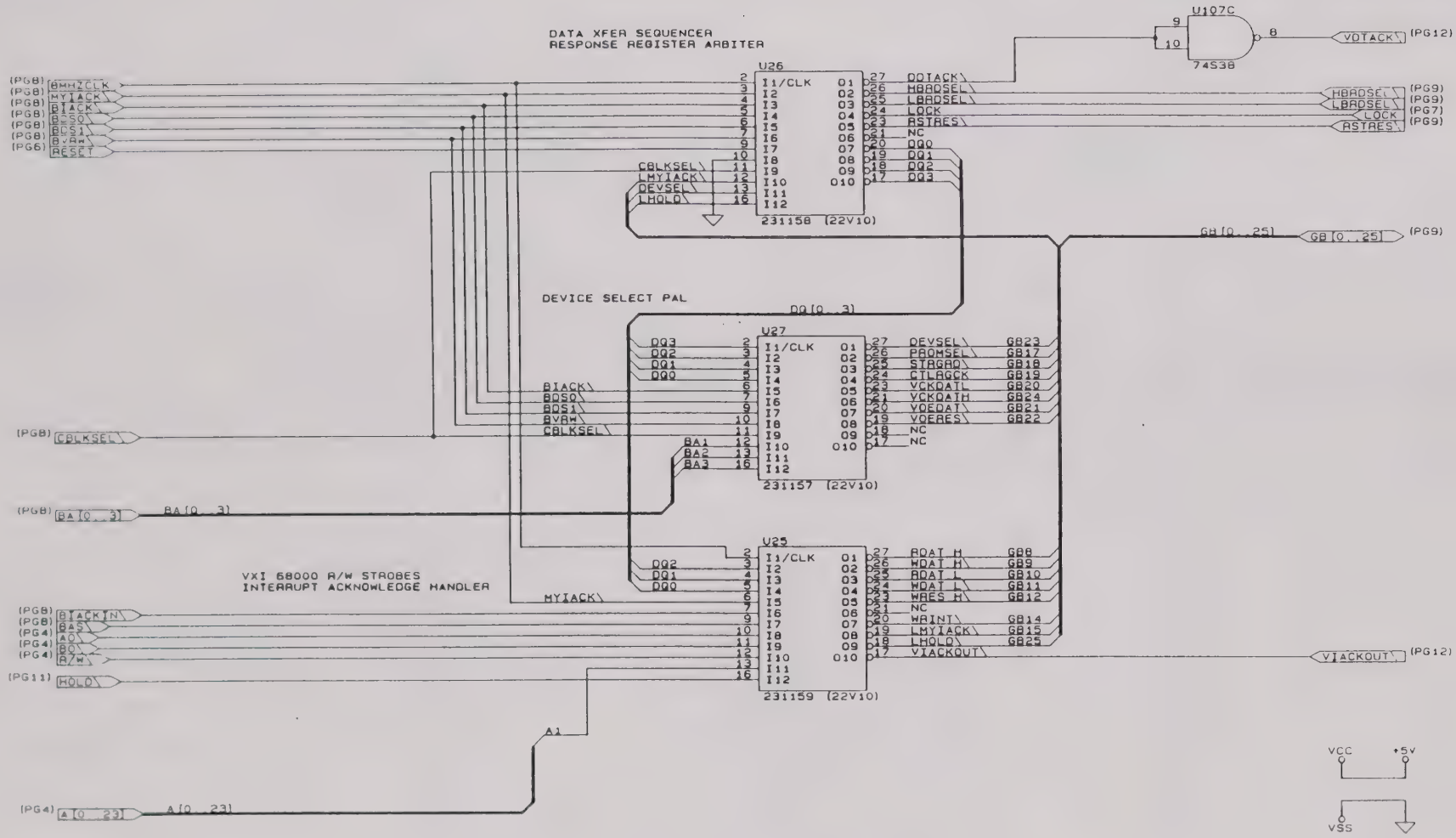

SIZE	CODE IDENT NO	DOCUMENT NO	REV
B	21793	431901-003	A
SCALE		SHEET 10 OF 13	

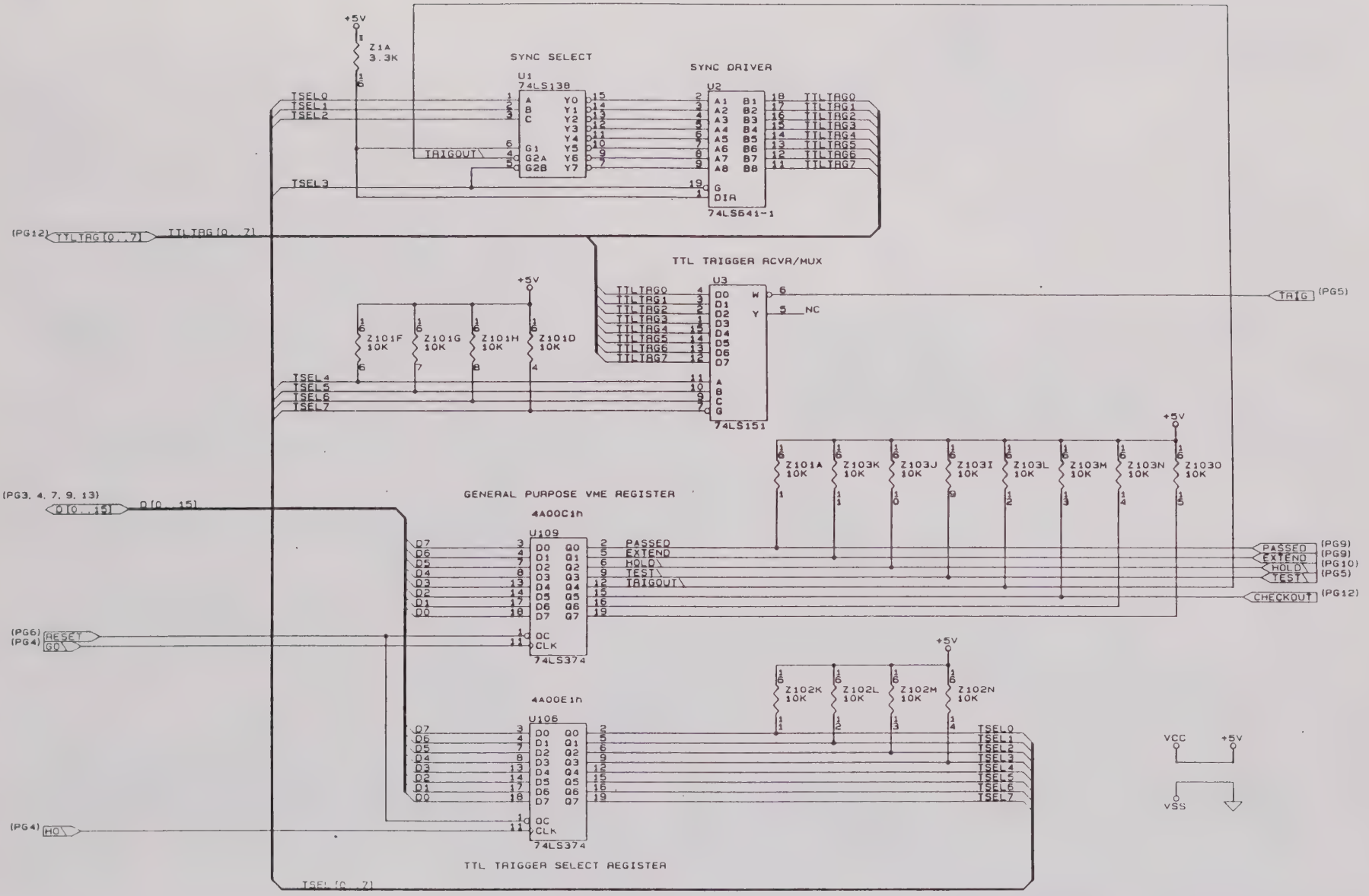

SIZE	CODE IDENT NO	DOCUMENT NO	REV
B	21793	431901-003	A
SCALE		SHEET 11 OF 13	

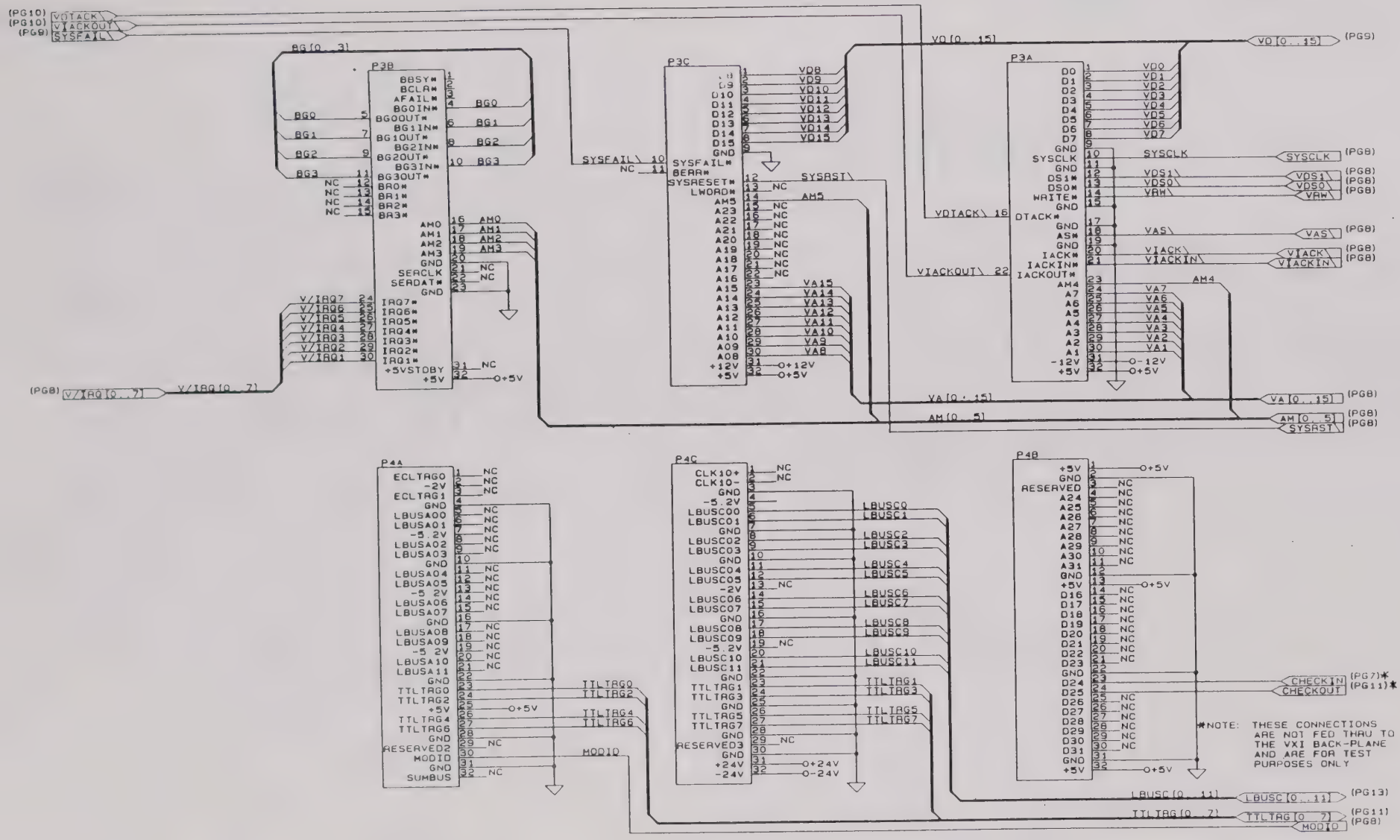

SIZE	CODE IDENT NO	DOCUMENT NO	REV
B	21793	431901-003	A
SCALE		SHEET 12 OF 13	

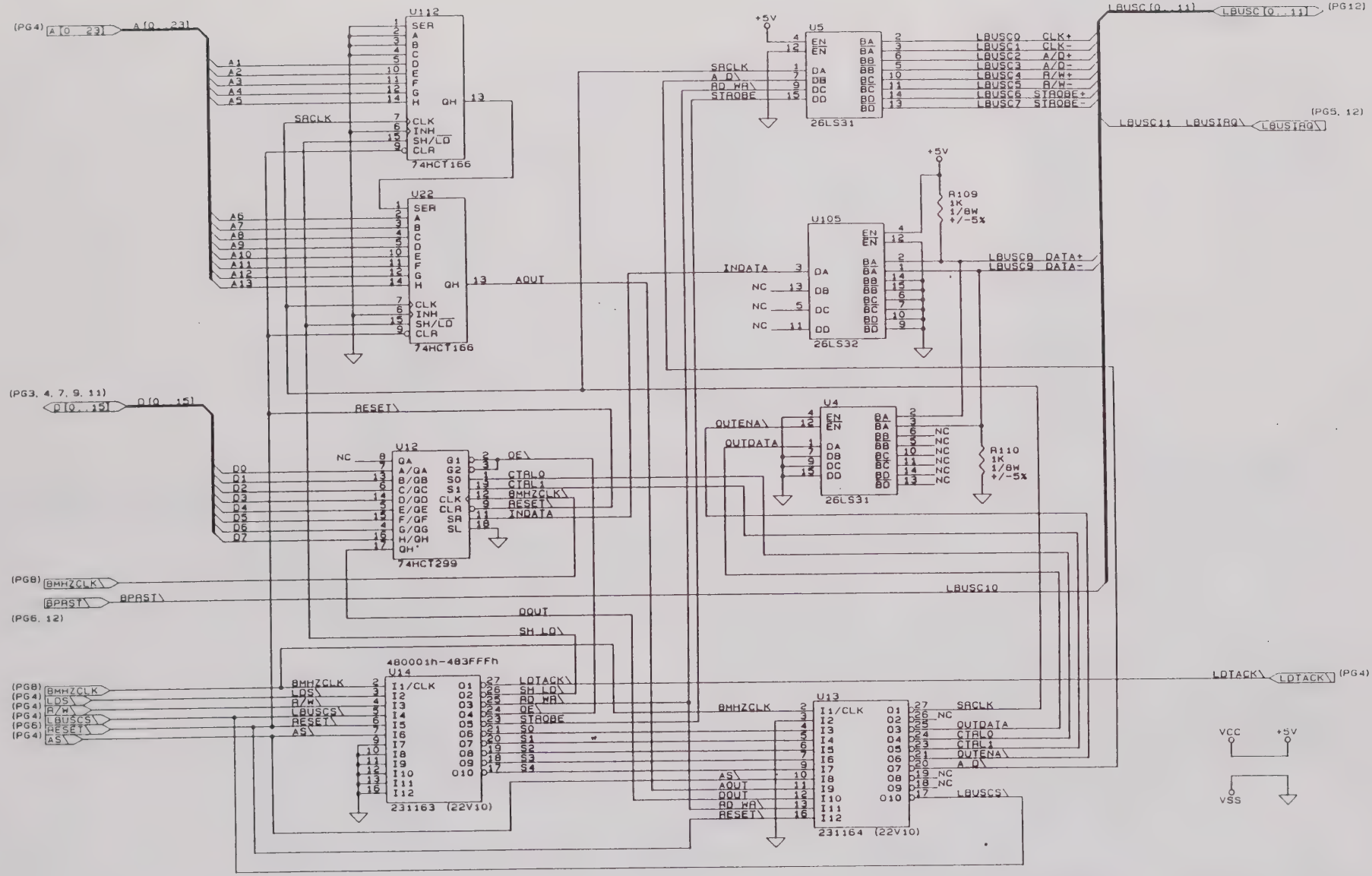

SIZE	CODE IDENT NO	DOCUMENT NO	REV
B	21793	431901-003	A
SCALE		SHEET 13 OF 13	

401901-003 PCB ASSY., 1260 MASTER CPU

REF DESIG	KACAL-DANA P/N	DESCRIPTION	FSC	MANUFACTURER'S P/N
C1	110126	CAP, TANTA, 6.8UF, 35V, 20 PERCENT	05397	T355F685M035AS
C2	110143	CAP, TANTA, 1 UF, 35V, 20 PERCENT	05397	T355A105M035AS
C100-C128	R-21-1801	CAP, CHIP, 10 NF	95275	VJ1206Y103MF
CR1	211083	DIODE, SILICON	81349	1N916B
P3A	601858-032	CONNECTOR, PCB, PLUG, 32 PIN	52072	CAS32MPF1B
P3B	601858-032	CONNECTOR, PCB, PLUG, 32 PIN	52072	CAS32MPF1B
P3C	601858-032	CONNECTOR, PCB, PLUG, 32 PIN	52072	CAS32MPF1B
P4A	601858-032	CONNECTOR, PCB, PLUG, 32 PIN	52072	CAS32MPF1B
P4B	601858-032	CONNECTOR, PCB, PLUG, 32 PIN	52072	CAS32MPF1B
P4C	601858-032	CONNECTOR, PCB, PLUG, 32 PIN	52072	CAS32MPF1B
P5	601710-003	CONNECTOR, RT.ANGLE, SINGLE ROW, 3P	52072	CA-S03R-23B09
P6	601710-003	CONNECTOR, RT.ANGLE, SINGLE ROW, 3P	52072	CA-S03R-23B09
Q1	200320	TRANSISTOR, NPN	04713	MMBT3904
Q2	200295	TRANSISTOR, N-CHAN, MOSFET	17856	VN10KM
Q3	200320	TRANSISTOR, NPN	04713	MMBT3904
Q4	200320	TRANSISTOR, NPN	04713	MMBT3904
Q100	200320	TRANSISTOR, NPN	04713	MMBT3904
R100	050000-102	RES, CHIP, 1K, .06W, 5PCT	91637	CRCW-0805SERIES
R101	050038	RES, CHIP, 825 OHM, 1/8W, 5PCT	65940	MCR18825J
R102	R-20-5766	RES, CHIP, 2.7K, 1/8W, 5 PCT	65940	MCR18-2.7K OHM-5 PCT
R103	050000-102	RES, CHIP, 1K, .06W, 5PCT	91637	CRCW-0805SERIES
R104	R-20-5764	RES, CHIP, 100 OHM, 1/8W, 5 PCT	65940	MCR18-100 OHM-5 PCT
R105	050040	RES, CHIP, 6.04K, 1/8W, 1PCT	65940	MCR186.04KFW
R106	050000-102	RES, CHIP, 1K, .06W, 5PCT	91637	CRCW-0805SERIES
R107	050047	RES, CHIP, 2.21K, .06W, 1PCT	56235	50705CPX2211F30
R108	R-20-5787	RES, CHIP, 330 OHM,1/8W,5 PCT,200V	65940	MCR18-330 OHM-5 PCT
R109	R-20-5792	RES, CHIP, 1K, 1/8W,5 PCT,200V	65940	MCR18-1K-5 PCT
R110	R-20-5792	RES, CHIP, 1K, 1/8W,5 PCT,200V	65940	MCR18-1K-5 PCT
R111	R-20-5765	RES, CHIP, 470 OHM, 1/8W, 5 PCT	65940	MCR18-470 OHM-5 PCT
R112	R-20-5792	RES, CHIP, 1K, 1/8W,5 PCT,200V	65940	MCR18-1K-5 PCT
S1	601699	SWITCH, DIP, 8 POS, LOW PROFILE	71450	207-8-LPST
S2	601859	SWITCH, DIP, 4 POS	11237	2074LPST
U1	231094	IC, DEMUX DECODER	18324	N74LS138D
U2	231122	IC, SOIC	01295	SN74LS641-1DW
U3	231123	IC, MULTIPLEXER	18324	74LS151D
U4	231125	IC, DIGITAL, LINE DRIVER	27014	DS26LS31MN
U5	231125	IC, DIGITAL, LINE DRIVER	27014	DS26LS31MN
U6*	231122	IC, SOIC	01295	SN74LS641-1DW
U7	230986	IC,8-BIT COMPARATOR	07263	74F521SC
U8	231092	IC, TRI-STATE BUFFER	18324	74LS244D
U9	231118	IC, DIGITAL BUFFER	01295	SN74LS652DW
U10	231129	IC, OCTAL BUS TRANSCEIVERS	18324	N74LS645-1D
U11	231093	IC, QUAD COMPARATOR	04713	LM339D
U12	231119	IC, SHIFT REGISTER	18324	74HCT299D
U13	231164	MEMORY	21793	231164
U14	231163	MEMORY	21793	231163
U15	230980	IC,DUAL JK POS EDGE-TRIG F-F	07263	74F109SC
U16	231094	IC, DEMUX DECODER	18324	N74LS138D
U17	231092	IC, TRI-STATE BUFFER	18324	74LS244D
U18	230986	IC,8-BIT COMPARATOR	07263	74F521SC
U19	231162	MEMORY	21793	231162
U20	231124	IC, FLIP-FLOP	18324	N74LS374D
U21	231121	IC, QUADRUPLE 2-INPUT POS-OR GATE	01295	SN74HC32D
U22	231120	IC, 8-BIT, PARALLEL/SERIAL OUT S.R.	18324	74HCT166D
U23	231161	IC, MEMORY	21793	231161
U24	231160	IC, MEMORY	21793	231160
U25	231159	IC, MEMORY	21793	231159
U26	231158	IC, MEMORY	21793	231158
U27	231157	IC, MEMORY	21793	231157

401901-003 PCB ASSY., 1260 MASTER CPU

REF DESIG	RACAL-DANA P/N	DESCRIPTION	FSC	MANUFACTURER'S P/N
U28	231156	IC, MEMORY	21793	231156
U29	231155	IC, MEMORY	21793	231155
U30	230780	IC, COUNTER TIMER	04713	MC6840P
U31	231136	IC, MICROPROCESSING UNIT	62786	HD68000CP-8
U32	231146	IC, MEMORY, EEPROM	21793	231146
U33	231166	IC, MEMORY	21793	231166
U34	231167	IC, MEMORY	21793	231167
U100	231129	IC, OCTAL BUS TRANSCEIVERS	18324	N74LS645-1D
U101	231118	IC, DIGITAL BUFFER	01295	SN74LS652DW
U102	231092	IC, TRI-STATE BUFFER	18324	74LS244D
U103	230986	IC,8-BIT COMPARATOR	07263	74F521SC
U104	231127	IC, FLIP-FLOP	04713	SN74LS74AD
U105	231096	IC, QUAD DIFF RECEIVER	01295	AM26LS32ACD
U106	231124	IC, FLIP-FLOP	18324	N74LS374D
U107	231125	IC, NAND GATE	18324	74S38D
U108	231128	IC, ENCODER	01295	SN74LS148D
U109	231124	IC, FLIP-FLOP	18324	N74LS374D
U110	231092	IC, TRI-STATE BUFFER	18324	74LS244D
U111	231093	IC, QUAD COMPARATOR	04713	LM339D
U112	231120	IC, 8-BIT, PARALLEL/SERIAL OUT S.R.	18324	74HCT166D
U113	231094	IC, DEMUX DECODER	18324	N74LS138D
U114	231137	IC, MEMORY	21793	231137
U115	231137	IC, MEMORY	21793	231137
VR1	230951	IC, 1.2V MICRO PWR V REF DIODE	27014	LM385BM-1.2
Z1	080121	RES, NETWORK, 3.3K, 16P, 8R	11236	767-163R33KS
Z2	080116	RES NETWORK, 16P8R, 10K	73138	628-AL-103J
Z3	080120	RES NETWORK, 10K	11236	767-161R10K
Z4	080119	RES NETWORK, 220K	91637	SOMC-1603-224K
Z100	080120	RES NETWORK, 10K	11236	767-161R10K
Z101	080120	RES NETWORK, 10K	11236	767-161R10K
Z102	080120	RES NETWORK, 10K	11236	767-161R10K
Z103	080120	RES NETWORK, 10K	11236	767-161R10K
{65}1	411901	PCB OPTION 01 (UNLOADED)	21793	411901
{69}A/R	500022	WIRE, BARE COPPER/TIN, 22 GA	21793	500022
{71}1	601277	IC SOCKET, 28-PIN	06776	ICA-286-S-TG
{76}1	601715	SOCKET, CHIP CARRIER, 68 PIN	09922	Q1LE68P-410T
{77}4	601735-016	CONNECTOR, PCB, RECEPT, 16 PIN	55322	SL116G32
{92}3	610257	STANDOFF, SWAGE, 1/4D, 4-40 X .31	06540	9534BB04403A
{93}1	404782	CABLE ASSY., LED FAIL	21793	404782

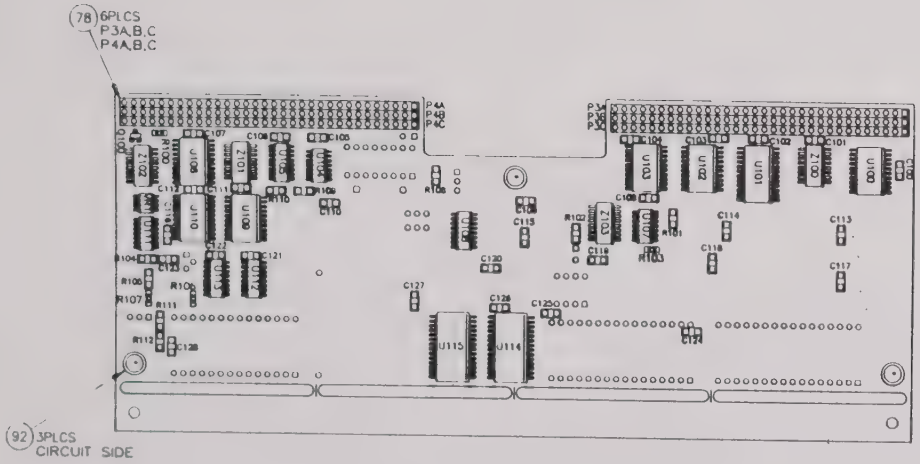

CIRCUIT SIDE

9. ALL COMPONENTS MUST NOT EXCEED THE HEIGHT OF .375 ABOVE THE COMPONENT SIDE OF PC BOARD.

△8 INSTALL CABLE ASSY (ITEM 93) INTO P5 (ITEM 75)

△7 INSTALL STANDOFF (ITEM 92) BEFORE P5,6 (ITEM 75)

6. REFERENCE DESIGNATORS RANGE FROM 1 TO 99 FOR THE COMPONENT SIDE AND FROM 100 TO 199 FOR THE CIRCUIT SIDE OF THE PCB.

△5 ITEM 79,S2, SWITCHES 1,3,4 ARE "ON" POSITION, SWITCH 2 IS "OFF" POSITION.

△4 ITEM 73,S1, SWITCHES 1,2,3,4 ARE "ON" POSITION, SWITCHES 5,6,7,8 ARE "OFF" POSITION.

△3 NOTE POSITION OF ANGLE ON SOCKET OF U31.

△2 INK STAMP SERIAL NUMBER AND CURRENT REVISION ON COMPONENT SIDE APPROX. WHERE SHOWN

1. REFERENCE SCHEMATIC 435043.

NOTES UNLESS OTHERWISE SPECIFIED

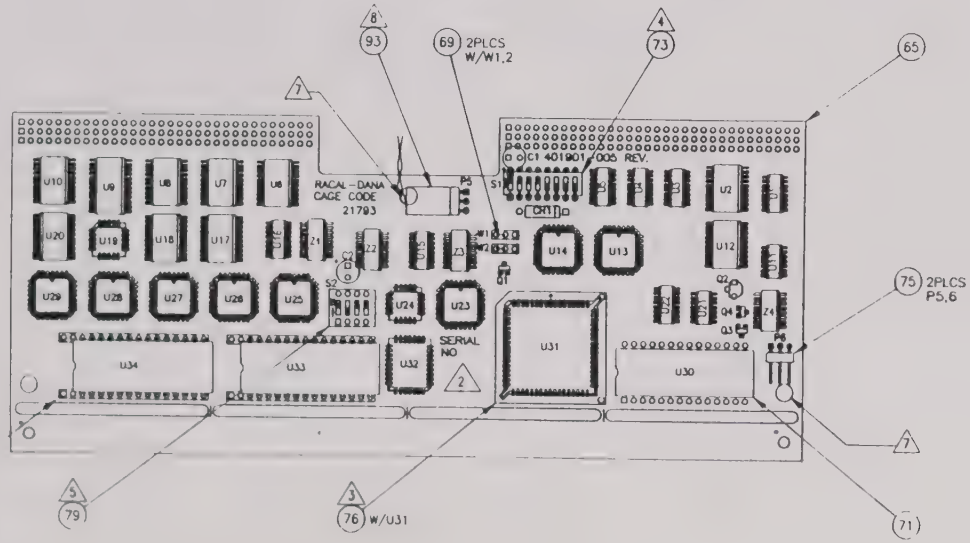

COMPONENT SIDE

PROPRIETARY NOTICE

THIS DOCUMENT AND THE TECHNICAL DATA HEREON DISCLOSED ARE PROPRIETARY TO RACAL-DANA INSTRUMENTS INC AND SHALL NOT, WITHOUT EXPRESS WRITTEN PERMISSION OF RACAL-DANA INSTRUMENTS INC BE USED, RELEASED OR DISCLOSED IN WHOLE OR IN PART, OR USED TO SOLICIT QUOTATIONS FROM A COMPETITIVE SOURCE OR USED FOR MANUFACTURE BY ANYONE OTHER THAN RACAL-DANA INSTRUMENTS INC. THE INFORMATION HEREON HAS BEEN DEVELOPED AT PRIVATE EXPENSE, AND MAY ONLY BE USED FOR PURPOSES OF ENGINEERING EVALUATION AND FOR INCORPORATION INTO TECHNICAL SPECIFICATIONS AND OTHER DOCUMENTS WHICH SPECIFY PROCUREMENT OF PRODUCTS FROM RACAL-DANA INSTRUMENTS INC

RACAL-DANA Instruments Inc.
4 GOODYEAR, IRVINE, CALIFORNIA 92714

DOCUMENT TITLE

SMART CONTROL MODULE, 1.3

SIZE	CODE IDENT NO	DOCUMENT NO	REV
D	21793	401901-005	B
SCALE	.	SHEET 1 OF 4	

REF DES	IC TYPE	+5V PIN NO.	GND PIN NO.
U114, 115	62256	28	14
U108	74LS148	16	8
U107	74S38	14	7
U105	26LS32	16	8
U104	74LS74	14	7
U34	231417-002(27512)	30, 32	16
U33	231417-001(27512)	30, 32	16
U32	28C256/28C513	32	16
U31	MC68000CP-8	14, 52	16, 17, 56, 57
U30	6840P	14	1
U29	231408-002(20RA10)	28	15
U28	231156 (20RA10)	28	15
U27	231408-004(22V10)	28	14
U26	231158 (22V10)	28	14
U25	231408-003(22V10)	28	14
U24	231408-001(16LBQ)	20	10
U23	231161 (22V10)	28	14

IC POWER CONNECTIONS

REF. DES.	IC TYPE	+5V PIN NO.	GND PIN NO.
U22, 112	74HCT166	16	8
U21	74HC32	14	7
U20, 106, 109	74LS374	20	10
U19	231162 (16L8)	20	10
U15	74F109	16	8
U14	231163 (22V10)	28	14
U13	231164 (22V10)	28	14
U12	74HCT299	20	10
U11, 111	LM339	3	12
U10, 100	74ALS645A-1	20	10
U9, 101	74LS652	24	12
U8, 17, 102, 110	74LS244	20	10
U7, 18, 103	74F521	20	10
U4, 5	26LS31	16	8
U3	74LS151	16	8
U2, 6	74LS641-1	20	10
U1, 16, 113	74LS138	16	8

IC POWER CONNECTIONS

HIGHEST REF. DES
Z4, 103
W2
VR1
S2
U34, 115
R112
Q4, 100
P6
CR1
C2, 128

5. PAL U27 PIN 18 HAS A PIN NAMED RESVD. THIS PIN IS CONNECTED INTERNALLY IN PAL.
4. REFERENCE DESIGNATORS RANGE FROM 1 TO 99 FOR THE COMPONENT SIDE AND FROM 100 TO 199 FOR THE SOLDER SIDE OF THE PCB
3. RESISTOR VALUES ARE IN OHMS.
2. CAPACITOR VALUES ARE IN MICROFARADS, +/-20%, 50V UNLESS OTHERWISE SPECIFIED.
1. RESISTOR NETWORKS ARE IN OHMS, +/-2%.

NOTES: UNLESS OTHERWISE SPECIFIED

PROPRIETARY NOTICE
THIS DOCUMENT AND THE TECHNICAL DATA HEREON DISCLOSED ARE PROPRIETARY TO RACAL DANA INSTRUMENTS INC AND SHALL NOT WITHOUT EXPRESS WRITTEN PERMISSION OF RACAL DANA INSTRUMENTS INC BE USED RELEASED OR DISCLOSED IN WHOLE OR IN PART OR USED TO SOLICIT QUOTATIONS FROM A COMPETITIVE SOURCE OR USED FOR MANUFACTURE BY ANYONE OTHER THAN RACAL DANA INSTRUMENTS INC THE INFORMATION HEREON HAS BEEN DEVELOPED AT PRIVATE EXPENSE AND MAY ONLY BE USED FOR PURPOSES OF ENGINEERING EVALUATION AND FOR INCORPORATION INTO TECHNICAL SPECIFICATIONS AND OTHER DOCUMENTS WHICH SPECIFY PROCUREMENT OF PRODUCTS FROM RACAL DANA INSTRUMENTS INC

RACAL-DANA Instruments Inc.
4 GOODYEAR, IRVINE, CALIFORNIA 92714

DOCUMENT TITLE

SCHEM., 1260 CPU, 1.3

SIZE	CODE IDENT NO	DOCUMENT NO	REV
B	21793	431901-005	A

SCALE ——— SHEET 1 OF 13

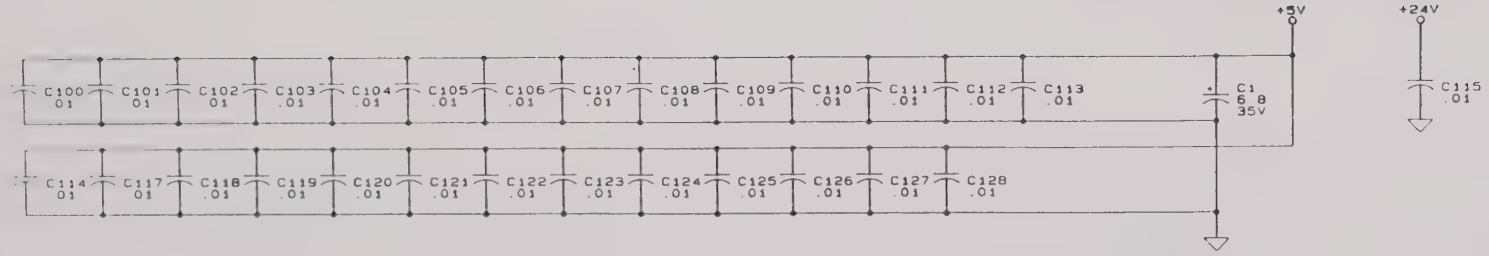

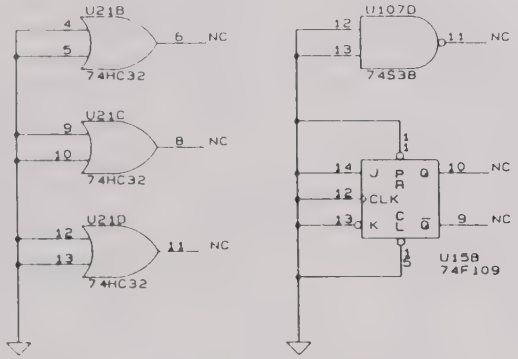

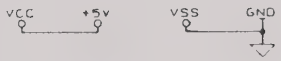

SIZE	CODE IDENT NO	DOCUMENT NO	REV
B	21793	431901-005	A
SCALE		SHEET 2 OF 13	

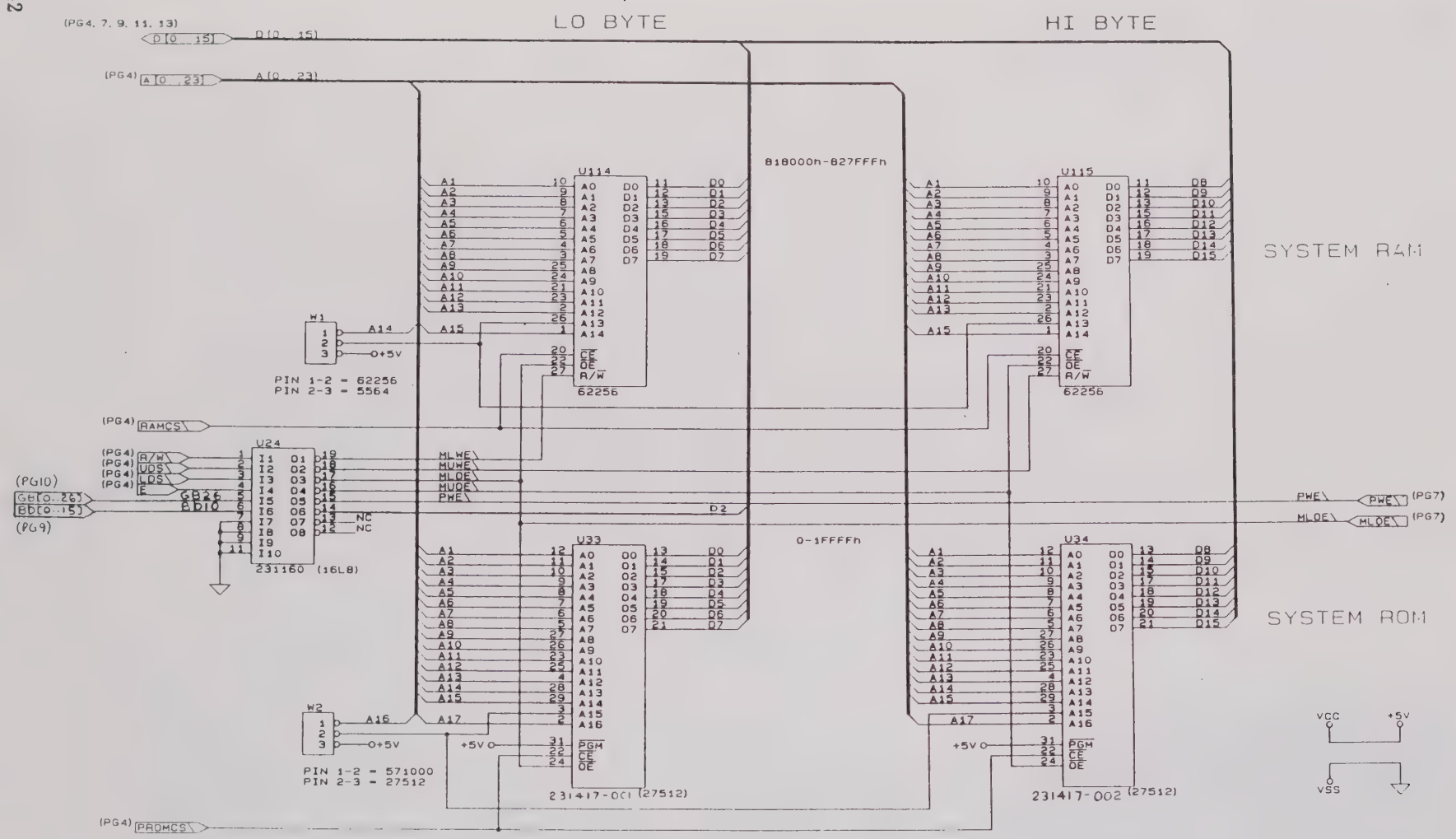

SIZE	CODE IDENT NO	DOCUMENT NO	REV
B	21793	431901-005	A
SCALE ———		SHEET 3 OF 13	

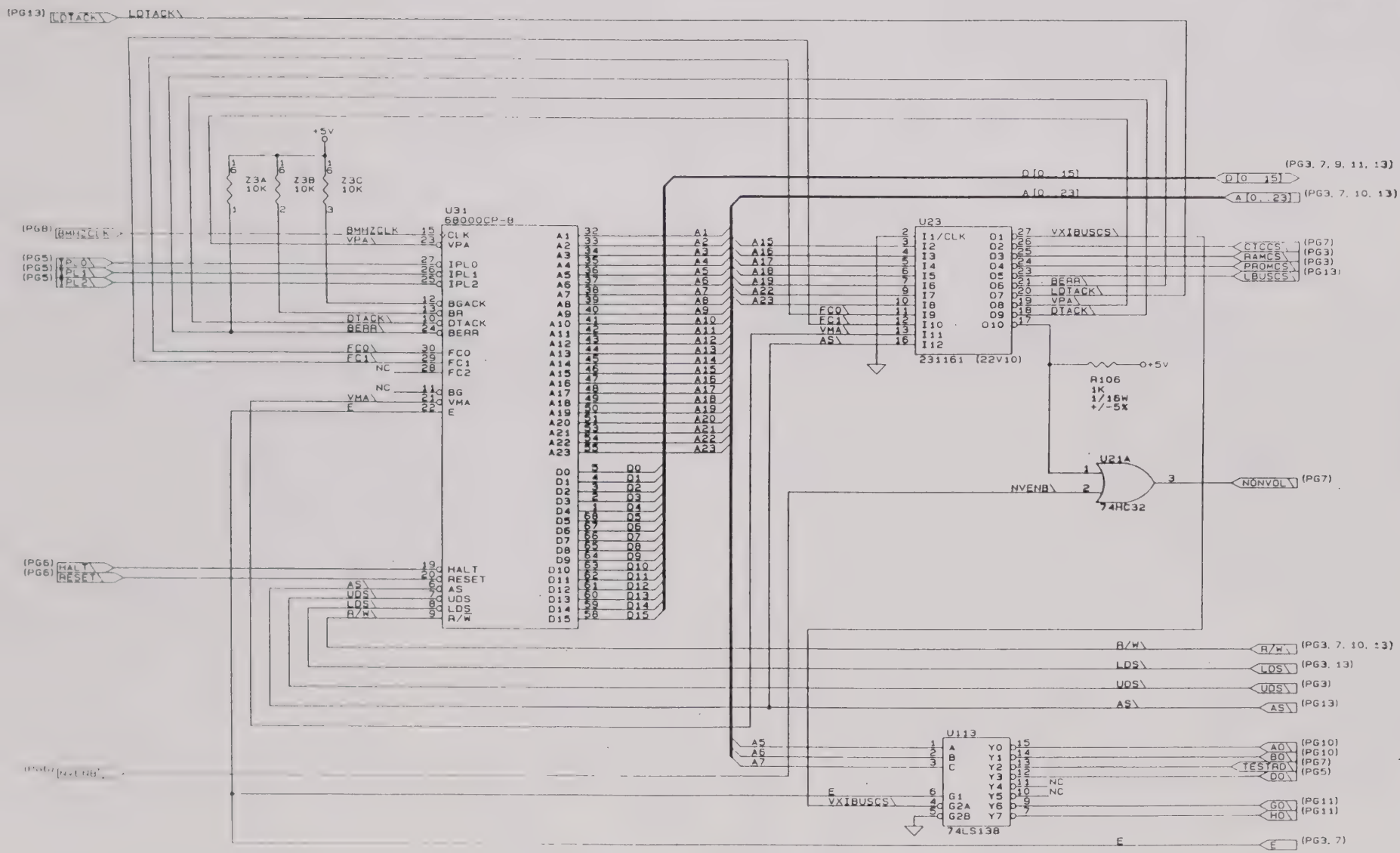

SIZE	CODE IDENT NO	DOCUMENT NO	REV
B	21793	431901-005	A
SCALE		SHEET 4 OF 13	

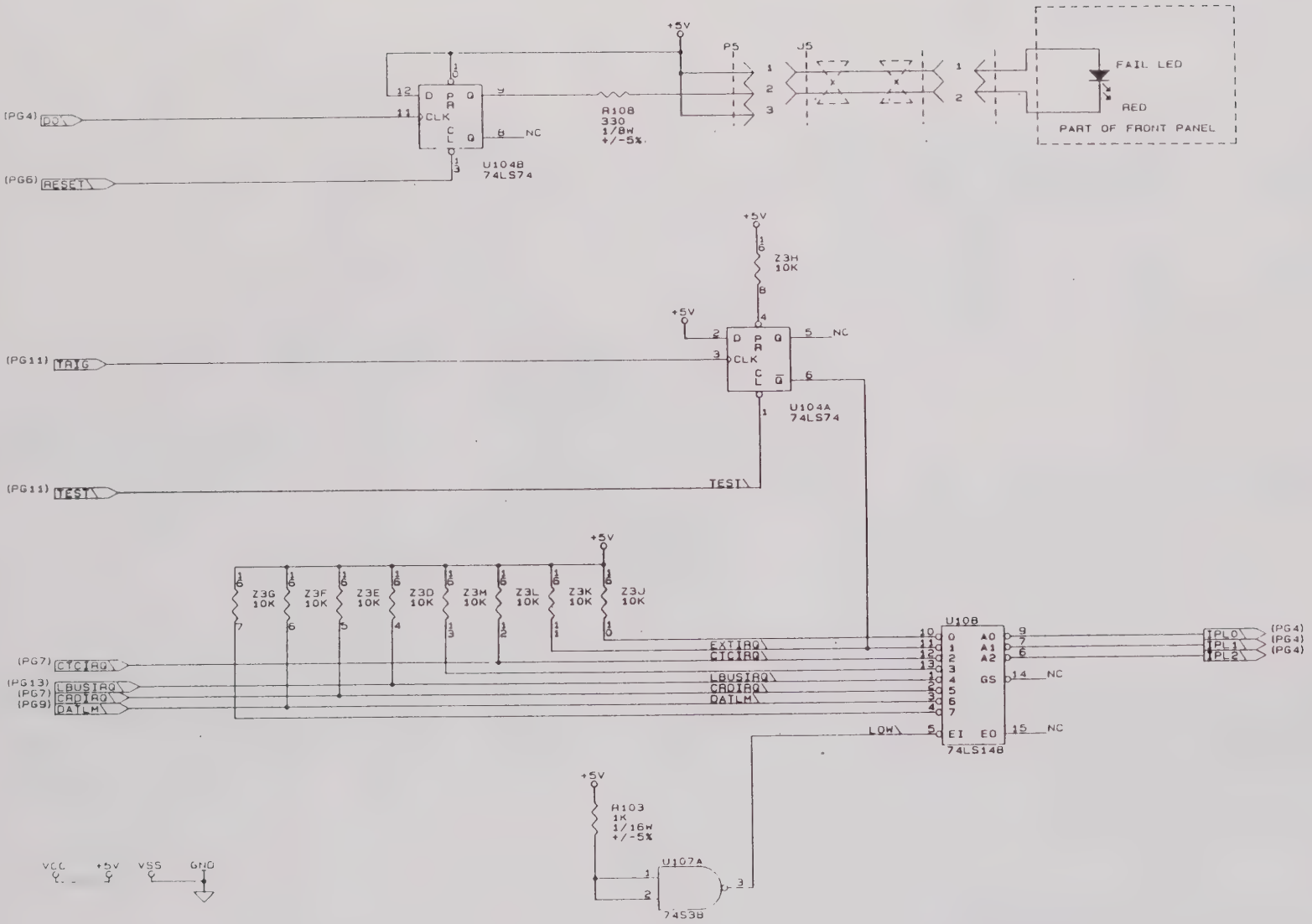

SIZE	CODE IDENT NO	DOCUMENT NO	REV
B	21793	431901-005	A
SCALE		SHEET 5 OF 13	

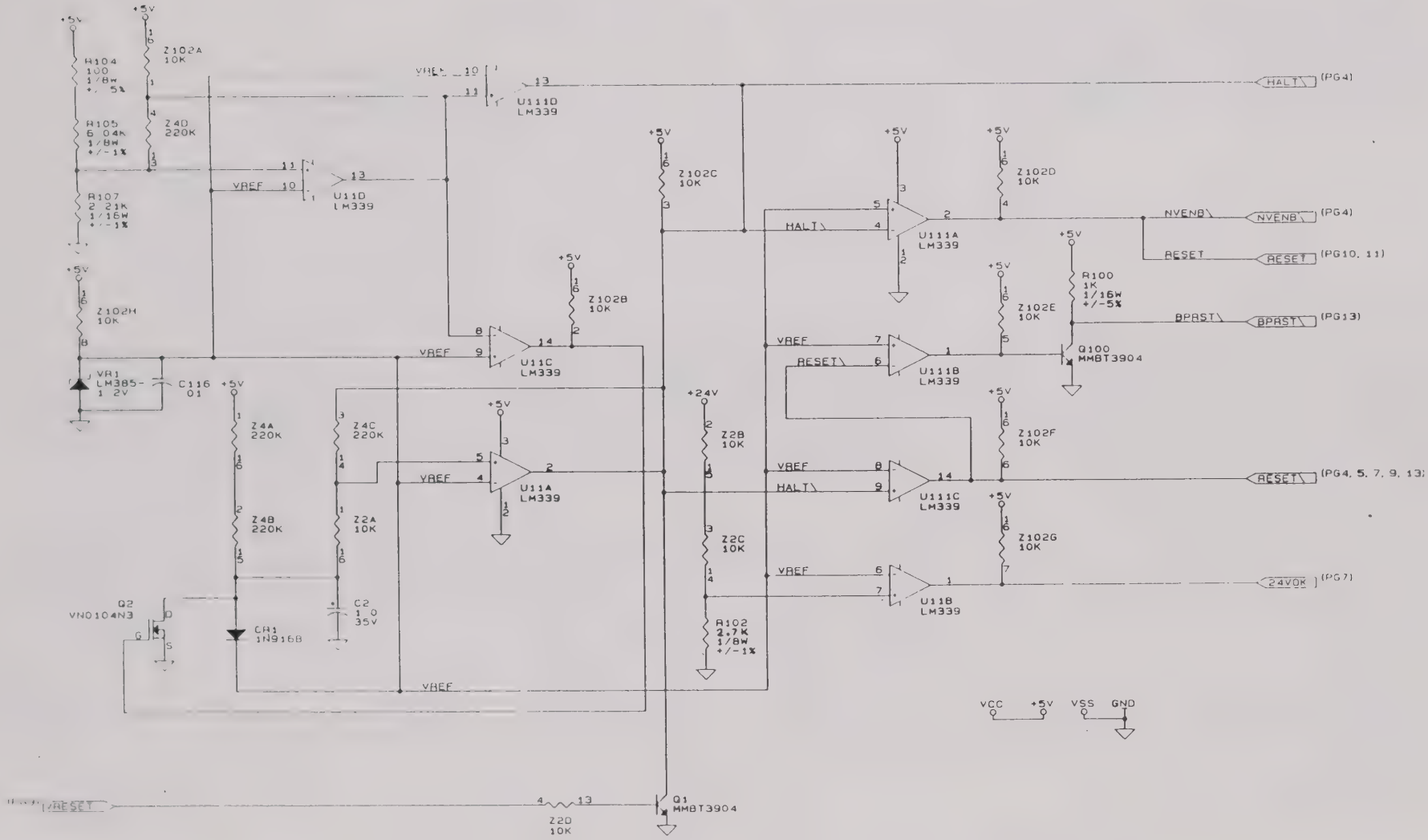

SIZE	CODE IDENT NO	DOCUMENT NO	REV
B	21793	431901-005	A
SCALE		SHEET 6 OF 13	

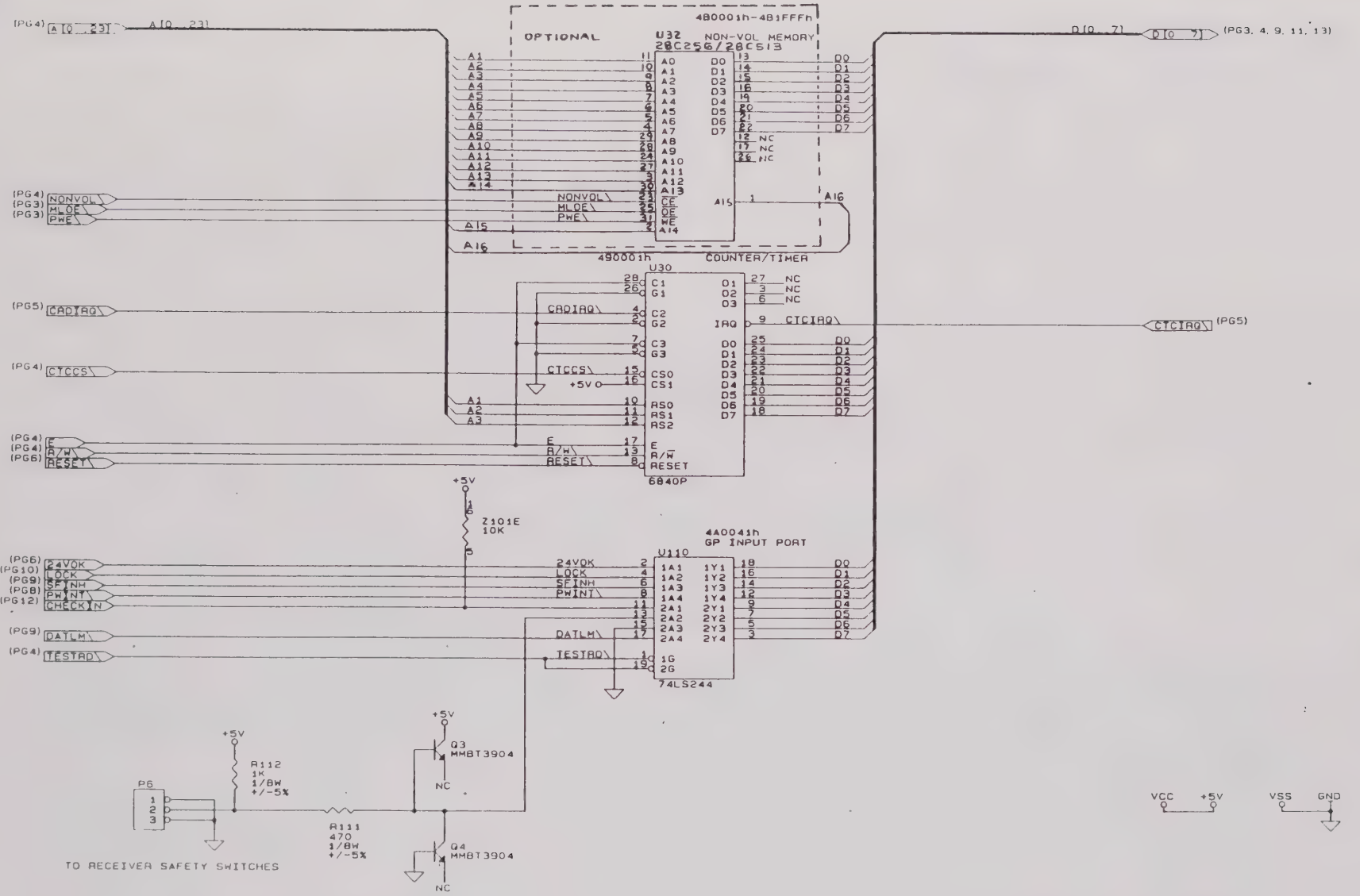

SIZE	CODE IDENT NO	DOCUMENT NO	REV
B	21793	431901-005	A
SCALE		SHEET 7 OF 13	

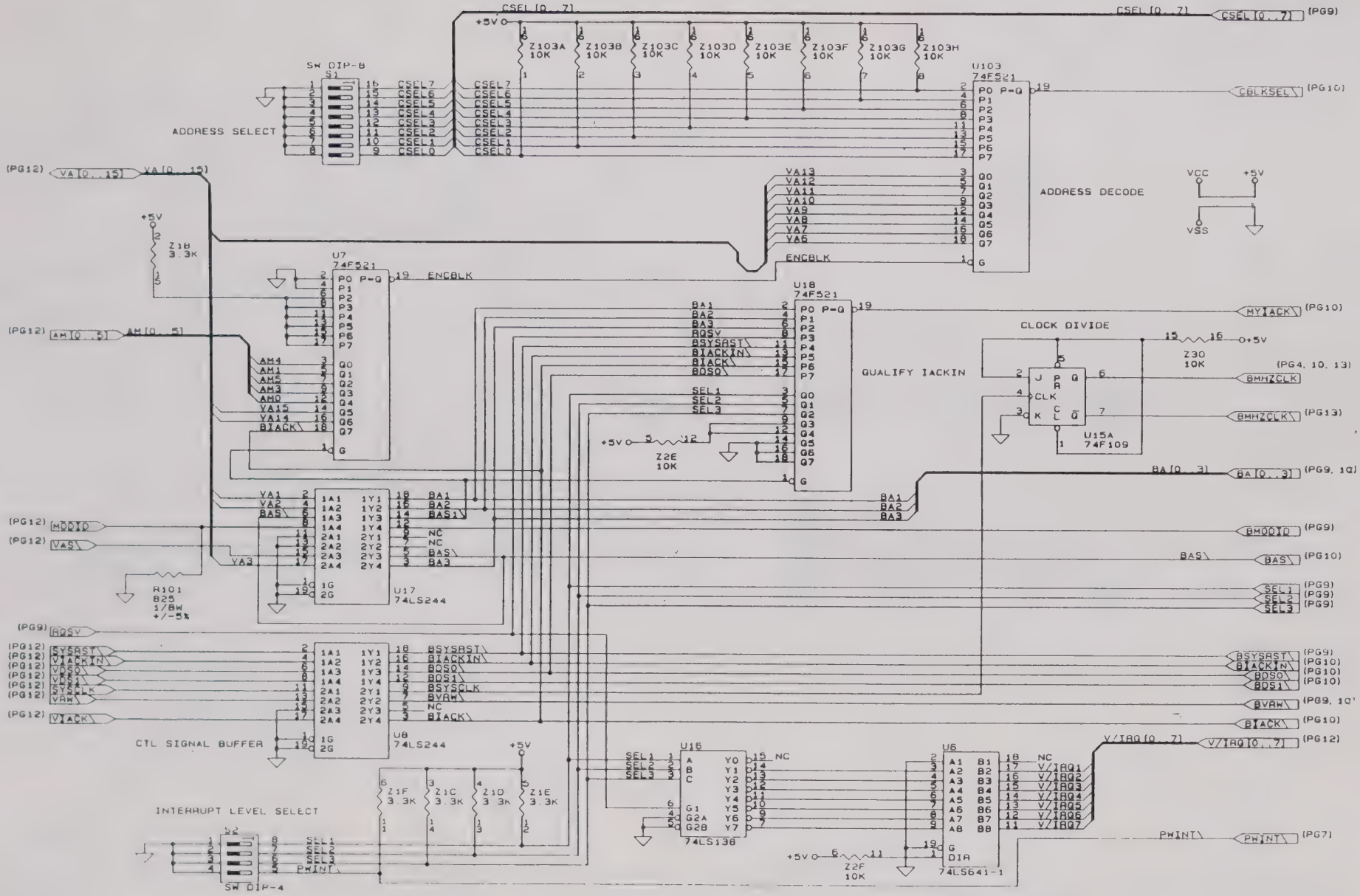

SIZE	CODE IDENT NO	DOCUMENT NO	REV
B	21793	431901-005	A
SCALE		SHEET 8 OF 13	

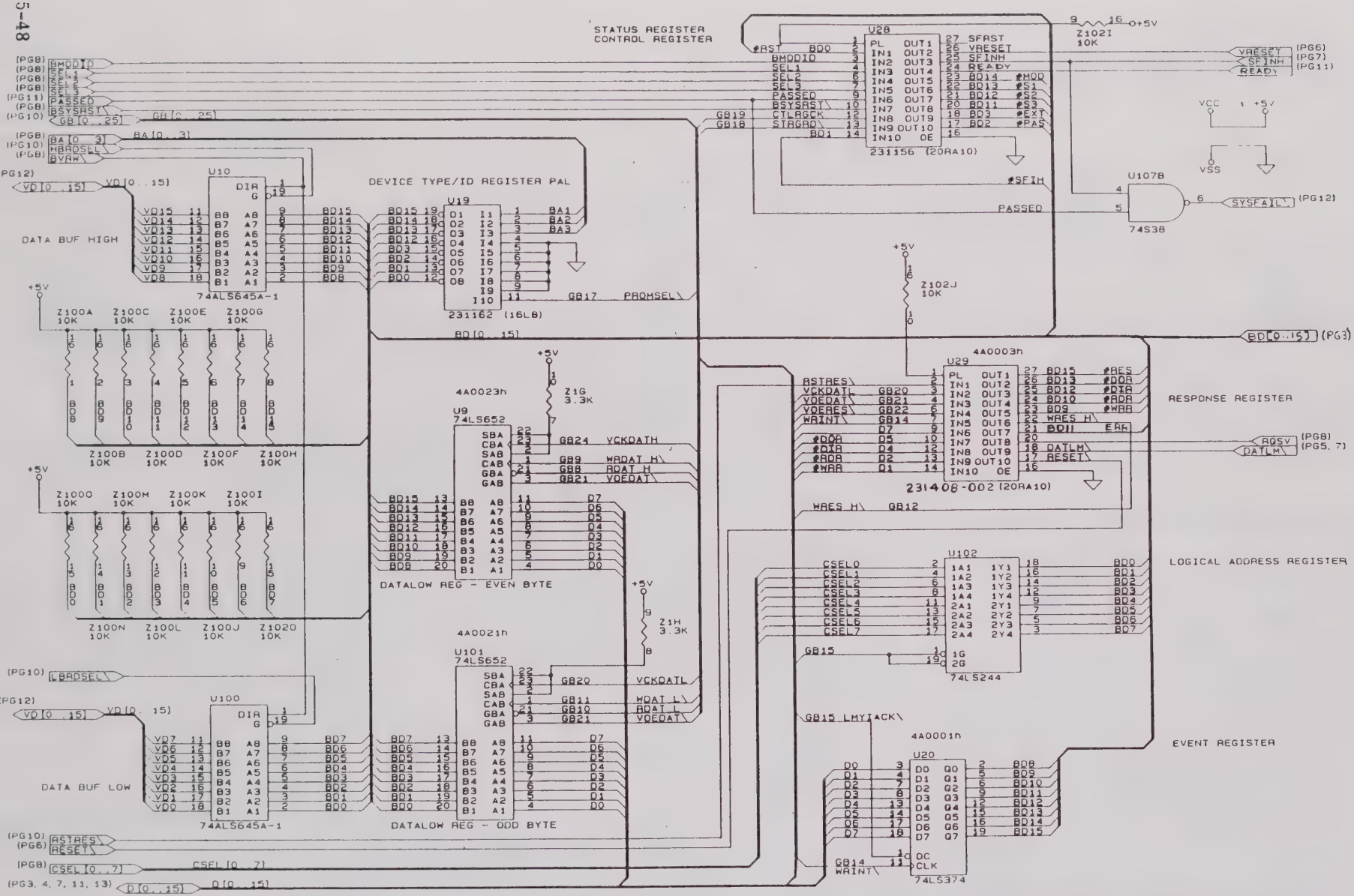

SIZE	CODE IDENT NO	DOCUMENT NO	REV
B	21793	431901-005	A
SCALE		SHEET 9 OF 13	

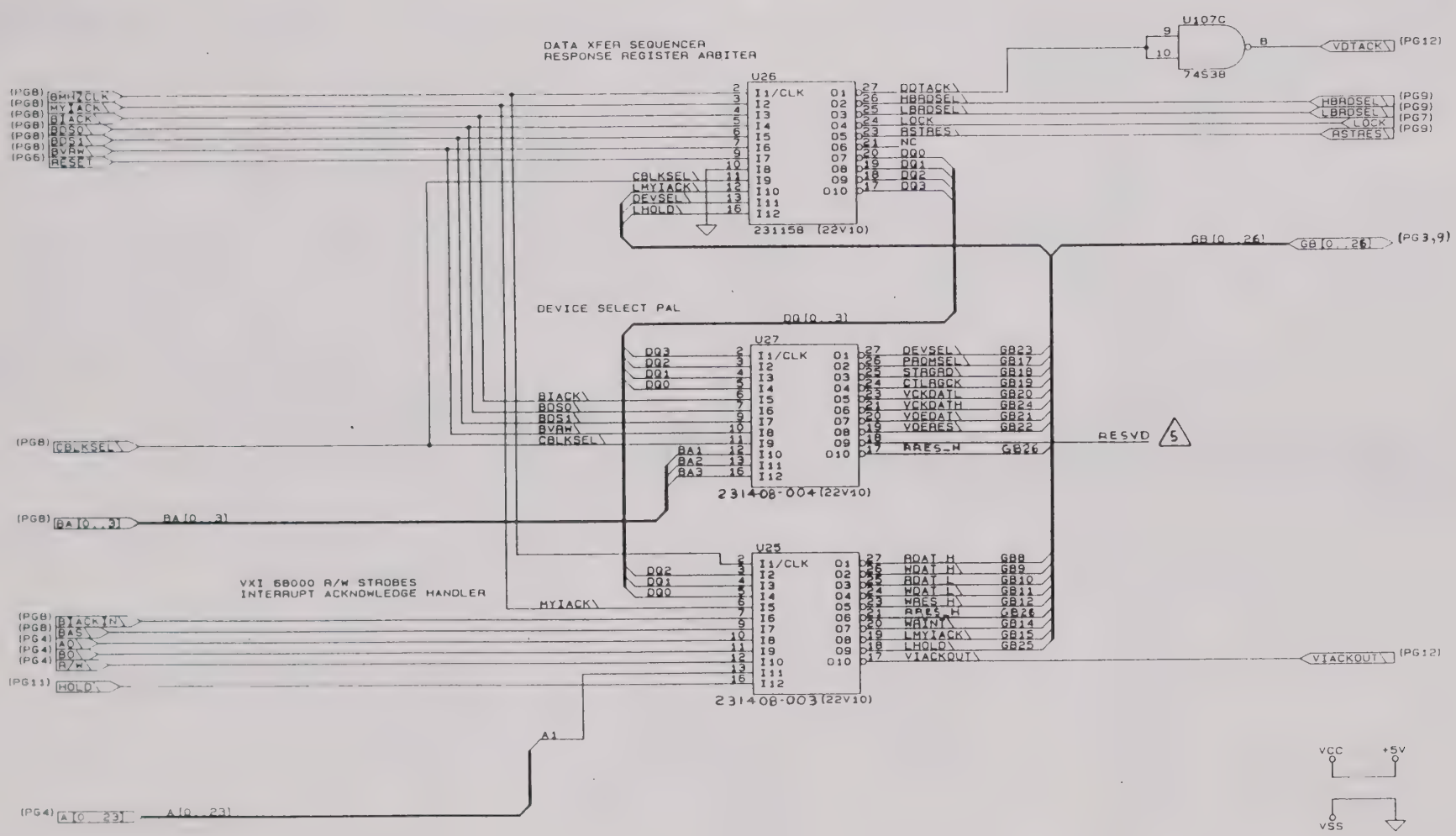

SIZE	CODE IDENT NO	DOCUMENT NO	REV
B	21793	431901-005	A
SCALE		SHEET 10 OF 13	

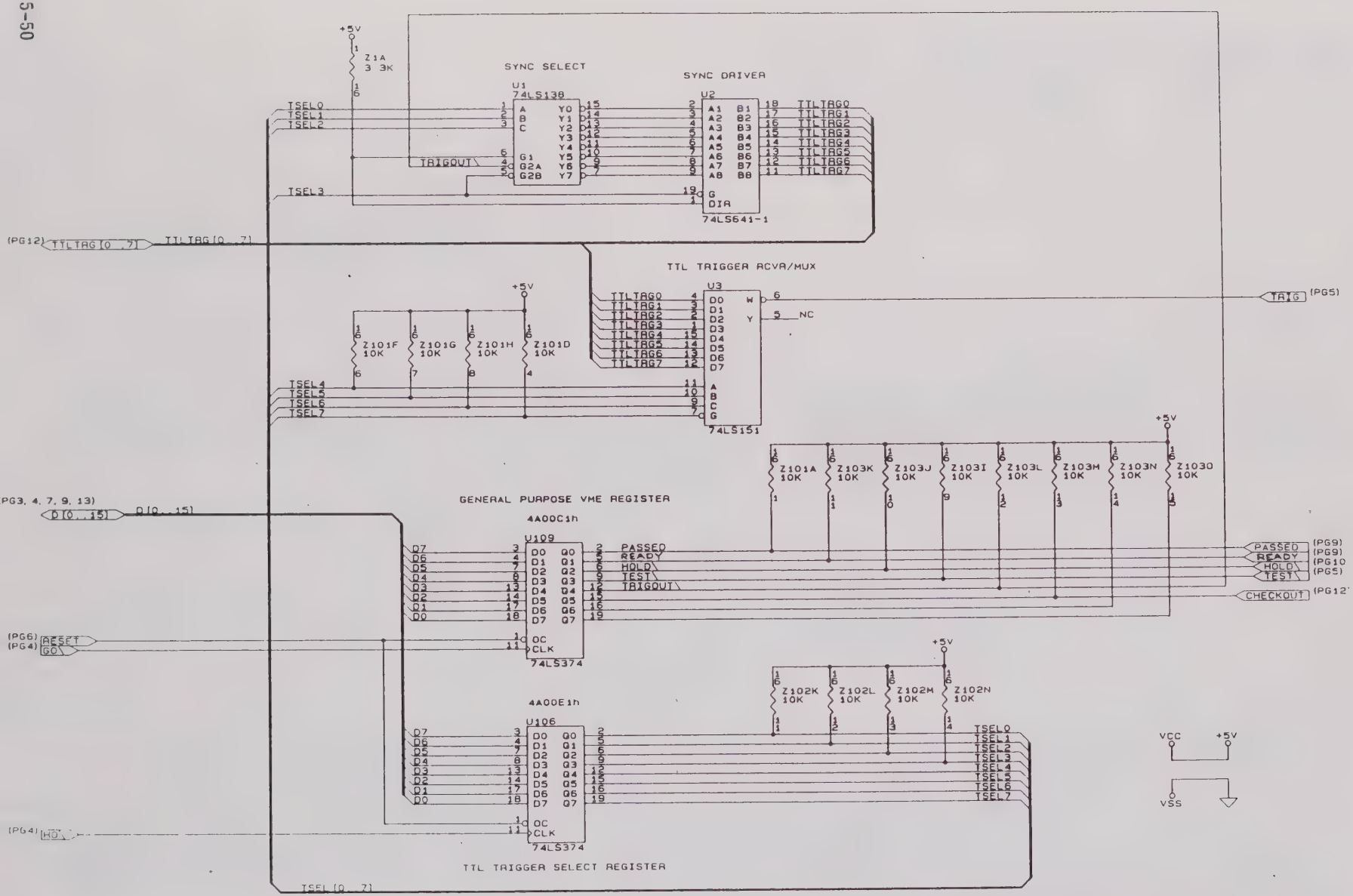

SIZE	CODE IDENT NO	DOCUMENT NO	REV
B	21793	431901-005	A
SCALE		SHEET 11 OF 13	

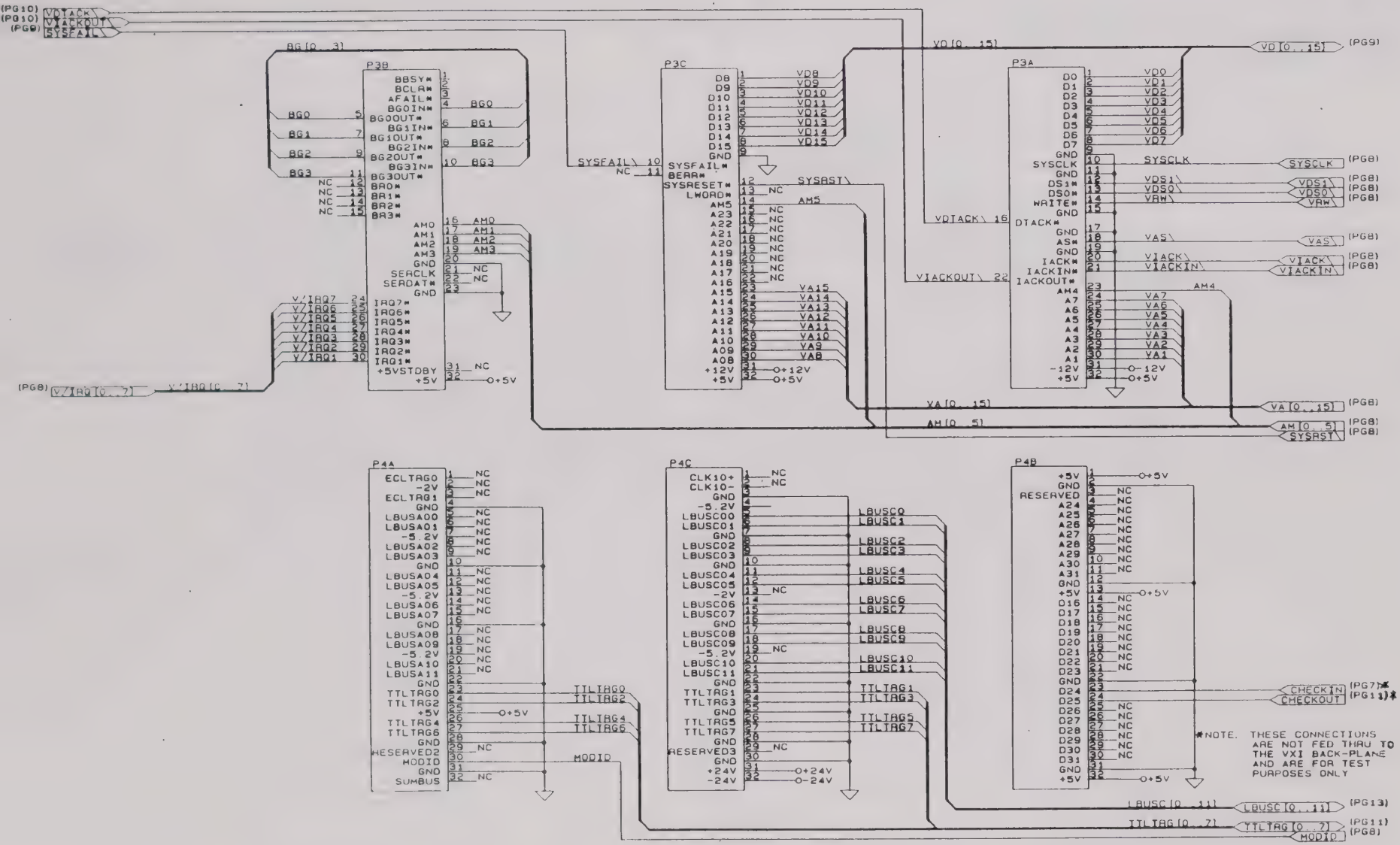

SIZE	CODE IDENT NO	DOCUMENT NO	REV
B	21793	431901-005	A
SCALE		SHEET 12 OF 13	

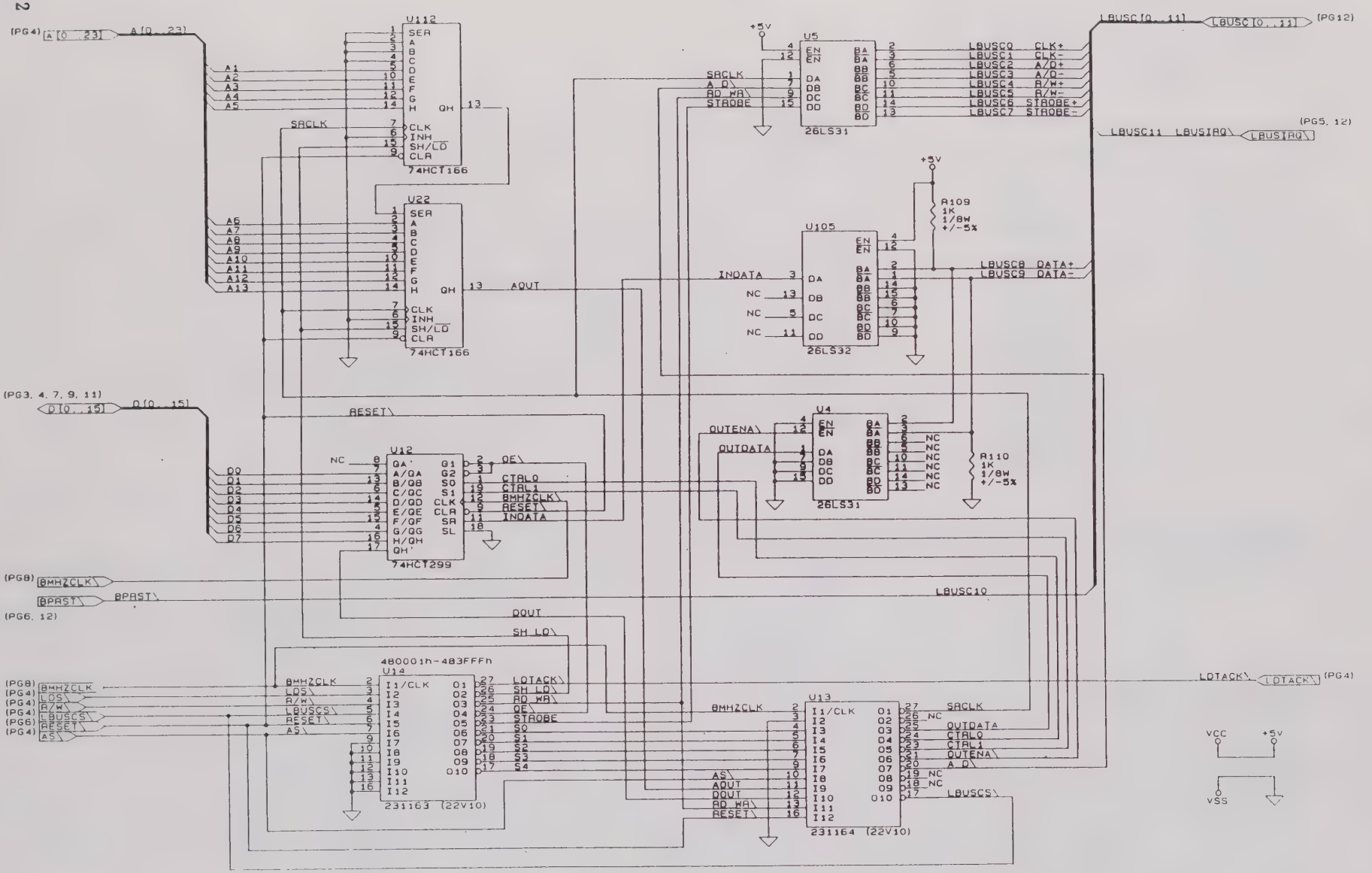

SIZE	CODE IDENT NO	DOCUMENT NO	REV
B	21793	431901-005	A
SCALE		SHEET 13 OF 13	

401901-005 PCB ASSY., 1260 MASTER CPU

REF DESIG	KACAL-DANA P/N	DESCRIPTION	FSC	MANUFACTURER'S P/N
C1	110126	CAP, TANTA, 6.8UF, 35V, 20 PERCENT	05397	T355F685M035AS
C2	110143	CAP, TANTA, 1 UF, 35V, 20 PERCENT	05397	T355A105M035AS
C100-C128	R-21-1801	CAP, CHIP, 10 NF	95275	VJ1206Y103MF
CR1	211083	DIODE, SILICON	81349	1N916B
P3A	601858-032	CONNECTOR, PCB, PLUG, 32 PIN	52072	CAS32MPF1B
P3B	601858-032	CONNECTOR, PCB, PLUG, 32 PIN	52072	CAS32MPF1B
P3C	601858-032	CONNECTOR, PCB, PLUG, 32 PIN	52072	CAS32MPF1B
P4A	601858-032	CONNECTOR, PCB, PLUG, 32 PIN	52072	CAS32MPF1B
P4B	601858-032	CONNECTOR, PCB, PLUG, 32 PIN	52072	CAS32MPF1B
P4C	601858-032	CONNECTOR, PCB, PLUG, 32 PIN	52072	CAS32MPF1B
P5	601710-003	CONNECTOR, RT.ANGLE, SINGLE ROW, 3P	52072	CA-S03R-23B09
P6	601710-003	CONNECTOR, RT.ANGLE, SINGLE ROW, 3P	52072	CA-S03R-23B09
Q1	200320	TRANSISTOR, NPN	04713	MMBT3904
Q2	200295	TRANSISTOR, N-CHAN, MOSFET	17856	VN10KM
Q3	200320	TRANSISTOR, NPN	04713	MMBT3904
Q4	200320	TRANSISTOR, NPN	04713	MMBT3904
Q100	200320	TRANSISTOR, NPN	04713	MMBT3904
R100	050000-102	RES, CHIP, 1K, .06W, 5PCT	91637	CRCW-0805SERIES
R101	050038	RES, CHIP, 825 OHM, 1/8W, 5PCT	65940	MCR18825J
R102	R-20-5766	RES, CHIP, 2.7K, 1/8W, 5 PCT	65940	MCR18-2.7K OHM-5 PCT
R103	050000-102	RES, CHIP, 1K, .06W, 5PCT	91637	CRCW-0805SERIES
R104	R-20-5764	RES, CHIP, 100 OHM, 1/8W, 5 PCT	65940	MCR18-100 OHM-5 PCT
R105	050040	RES, CHIP, 6.04K, 1/8W, 1PCT	65940	MCR186.04KFW
R106	050000-102	RES, CHIP, 1K, .06W, 5PCT	91637	CRCW-0805SERIES
R107	050047	RES, CHIP, 2.21K, .06W, 1PCT	56235	50705CPX2211F30
R108	R-20-5787	RES, CHIP, 330 OHM,1/8W,5 PCT,200V	65940	MCR18-330 OHM-5 PCT
R109	R-20-5792	RES, CHIP, 1K, 1/8W,5 PCT,200V	65940	MCR18-1K-5 PCT
R110	R-20-5792	RES, CHIP, 1K, 1/8W,5 PCT,200V	65940	MCR18-1K-5 PCT
R111	R-20-5765	RES, CHIP, 470 OHM, 1/8W, 5 PCT	65940	MCR18-470 OHM-5 PCT
R112	R-20-5792	RES, CHIP, 1K, 1/8W,5 PCT,200V	65940	MCR18-1K-5 PCT
S1	601699	SWITCH, DIP, 8 POS, LOW PROFILE	71450	207-8-LPST
S2	601859	SWITCH, DIP, 4 POS	11237	2074LPST
U1	231094	IC, DEMUX DECODER	18324	N74LS138D
U2	231122	IC, SOIC	01295	SN74LS641-1DW
U3	231123	IC, MULTIPLEXER	18324	74LS151D
U4	231125	IC, DIGITAL, LINE DRIVER	27014	DS26LS31MN
U5	231125	IC, DIGITAL, LINE DRIVER	27014	DS26LS31MN
U6	231122	IC, SOIC	01295	SN74LS641-1DW
U7	230986	IC,8-BIT COMPARATOR	07263	74F521SC
U8	231092	IC, TRI-STATE BUFFER	18324	74LS244D
U9	231118	IC, DIGITAL BUFFER	01295	SN74LS652DW
U10	231129	IC, OCTAL BUS TRANSCEIVERS	18324	N74LS645-1D
U11	231093	IC, QUAD COMPARATOR	04713	LM339D
U12	231119	IC, SHIFT REGISTER	18324	74HCT299D
U13	231164	IC, MEMORY	21793	231164
U14	231163	IC, MEMORY	21793	231163
U15	230980	IC,DUAL JK POS EDGE-TRIG F-F	07263	74F109SC
U16	231094	IC, DEMUX DECODER	18324	N74LS138D
U17	231092	IC, TRI-STATE BUFFER	18324	74LS244D
U18	230986	IC,8-BIT COMPARATOR	07263	74F521SC
U19	231162	IC, MEMORY	21793	231162
U20	231124	IC, FLIP-FLOP	18324	N74LS374D
U21	231121	IC, QUADRUPLE 2-INPUT POS-OR GATE	01295	SN74HC32D
U22	231120	IC, 8-BIT, PARALLEL/SERIAL OUT S.R.	18324	74HCT166D
U23	231161	IC, MEMORY	21793	231161
U24	231408-001	IC, DIGITAL, 16L8O, PAL	21793	231408-001
U25	231408-003	IC, DIGITAL, 22V10H, PAL	21793	231408-003
U26	231158	IC, MEMORY	21793	231158
U27	231408-004	IC, DIGITAL, 22V10H, PAL	21793	231408-004

401901-005 PCB ASSY., 1260 MASTER CPU

REF DESIG	RACAL-DANA P/N	DESCRIPTION	FSC	MANUFACTURER'S P/N
U28	231156	IC, MEMORY	21793	231156
U29	231408-002	IC, DIGITAL, 20RA10, PAL	21793	231408-002
U30	230780	IC, COUNTER TIMER	04713	MC6840P
U31	231136	IC, MICROPROCESSING UNIT	62786	HD68000CP-8
U32	231440	IC, MEMORY, PLCC	21793	231440
U33	231417-001	IC, MEMORY EPROM	21793	231417-001
U34	231417-002	IC, MEMORY EPROM	21793	231417-002
U100	231129	IC, OCTAL BUS TRANSCEIVERS	18324	N74LS645-1D
U101	231118	IC, DIGITAL BUFFER	01295	SN74LS652DW
U102	231092	IC, TRI-STATE BUFFER	18324	74LS244D
U103	230986	IC,8-BIT COMPARATOR	07263	74F521SC
U104	231127	IC, FLIP-FLOP	04713	SN74LS74AD
U105	231096	IC, QUAD DIFF RECEIVER	01295	AM26LS32ACD
U106	231124	IC, FLIP-FLOP	18324	N74LS374D
U107	231126	IC, NAND GATE	18324	74S38D
U108	231128	IC, ENCODER	01295	SN74LS148D
U109	231124	IC, FLIP-FLOP	18324	N74LS374D
U110	231092	IC, TRI-STATE BUFFER	18324	74LS244D
U111	231093	IC, QUAD COMPARATOR	04713	LM339D
U112	231120	IC, 8-BIT, PARALLEL/SERIAL OUT S.R.	18324	74HCT166D
U113	231094	IC, DEMUX DECODER	18324	N74LS138D
U114	231137	IC, MEMORY	21793	231137
U115	231137	IC, MEMORY	21793	231137
VR1	230951	IC, 1.2V MICRO PWR V REF DIODE	27014	LM385BM-1.2
Z1	080121	RES, NETWORK, 3.3K, 16P, 8R	11236	767-163R33KS
Z2	080116	RES NETWORK, 16P8R, 10K	73138	628-AL-103J
Z3	080120	RES NETWORK, 10K	11236	767-161R10K
Z4	080119	RES NETWORK, 220K	91637	SOMC-1603-224K
Z100	080120	RES NETWORK, 10K	11236	767-161R10K
Z101	080120	RES NETWORK, 10K	11236	767-161R10K
Z102	080120	RES NETWORK, 10K	11236	767-161R10K
Z103	080120	RES NETWORK, 10K	11236	767-161R10K
{65}1	411901-005	PCB OPTION 01 (UNLOADED)	21793	411901-005
{69}A/R	500022	WIRE, BARE COPPER/TIN, 22 GA	21793	500022
{71}1	601277	IC SOCKET, 28-PIN	06776	ICA-286-S-TG
{76}1	601715	SOCKET, CHIP CARRIER, 68 PIN	09922	Q1LE68P-410T
{77}4	601735-016	CONNECTOR, PCB, RECEPT, 16 PIN	55322	SL116G32
{92}3	610257	STANDOFF, SWAGE, 1/4D, 4-40 X .31	06540	9534BB04403A
{93}1	404782	CABLE ASSY., LED FAIL	21793	404782

List of Suppliers

FSC	SUPPLIER
00779	AMP INC. HARRISBURG, PA
01295	TEXAS INSTRUMENTS INC. DALLAS, TX
01526	GENICOM CORP. WAYNESBORO, VA
02735	RCA (SOLID STATE DIV.) SOMERVILLE, NEW JERSEY
03508	GENERAL ELECTRIC CO. (SEMI-CONDUCTOR PRODUCTS) AUBURN, NY
04713	MOTOROLA INC. (SEMICONDUCTOR PRODUCTS DIV) PHOENIX, AZ
05397	UNION CARBIDE CORP (MATERIALS SYSTEMS DIV) CLEVELAND, OHIO
05972	LOCTITE CORP HARTFORD, CONN
06383	PANDUIT CORP TINLEY PARK, CA
06540	AMATOM ELECTRONIC HARDWARE NEW ROCHELLE, NY
06776	ROBINSON NUGENT INC. NEW ALBANY, IN
07263	FAIRCHILD (SEMICONDUCTOR DIV.) MOUNTAIN VIEW, CA
08261	SPECTRA-STRIP CORP GARDEN GROVE, CA
09922	BURNDY CORP. NORWALK, CT
11236	CTS OF BERNE INC. BERNE, INDIANA
11237	CTS KEENE, INC. PASO ROBLES, CA
16956	DENNISON MFG. CO. FRAMINGTON, MA
17856	SILICONIX, INC. SANTA CLARA, CA
18324	SIGNETICS INC. SUNNYVALE, CA
21793	RACAL-DANA INSTRUMENTS INC. IRVINE, CA
22526	DUPONT CONNECTOR CO. NEW CUMBERLAND, PA
27014	NATIONAL SEMI-CONDUCTOR CORP. SANTA CLARA, CA
29005	STORM PRODUCTS CO. LOS ANGELES, CA
34359	THREE (3) M CO. (COMMERCIAL TAPE DIV.) ST. PAUL, MN
52072	CIRCUIT ASSY. CORP. COSTA MESA, CA
52210	GETTING ENGRG & MFG. CO. SPRING MILLS, PA
53387	THREE (3) M CO. ST. PAUL, MN
55322	SAMTEC, INC. NEW ALBANY, IN
56235	STATE OF THE ART INC. STATE COLLEGE, PA
56289	SPAGUE ELECTRIC CO. N. ADAMS, MA
61529	AROMAT CORP. CUPERTINO, CA
62559	SCHROFF, INC. WARWICK, RI
62786	HITACHI AMERICA LTD. SAN JOSE, CA
65832	AMERICAN RESEARCH ENGRG ELGIN, IL
65940	ROHM CORP. IRVINE, CA
70903	BELDEN CORP. CHICAGO, IL
71450	CTS CORP. ELKHART, IN
73138	BECKMAN INSTRUMENTS FULLERTON, CA
73445	AMPEREX ELECTRONIC CORP. HICKSVILLE, NY
78189	ILLINOIS TOOL WORKS, INC. (SHAKEPROOF, DIV.) ELGIN, IL
81349	MILITARY SPECIFICATION
86928	SEASTROM MFG CO. INC. GLENDALE, CA
91637	DALE ELECTRONICS INC. COLUMBUS, NEBRASKA
92194	ALPHA WIRE ELIZABETH, NEW JERSEY
95275	VITRAMON, INC. BRIDGEPORT, CONNECTICUT
98291	SEALECTRO CORP. MAMARONECK, NY

20 DPDT

1260-12 ACTUATOR RELAY

1260 VXI SWITCHING CARD

RACAL-DANA

RACAL-DANA INSTRUMENTS INC.

4 Goodyear Street, P.O. Box C-19541, Irvine, CA 92713
Telephone: 714/859-8999, Fax: 714/859-2505

RACAL INSTRUMENTS, LTD.

480 Bath Road, Slough, Berkshire, SL1 6BE, England
Telephone: 44-628 604455, Fax: 44-628 662017

RACAL SYSTEMS ELECTRONIQUE S.A.

18 Avenue Dutartre, 78150 Le Chesnay, France
Telephone: 33-1-3-955-8888, Fax: 33-1-3-955-6735

RACAL ELEKTRONIK SYSTEMS GmbH

Frankenforster Strasse 21, D-5060 Bergisch-Gladbach 1, Federal Republic of Germany
Telephone: 49-22-04-60081, Fax: 49-22-04-21491

RACAL SYSTEMS ELETTRONICA

Via Roma, 108/PAL, E1, 20060 Cassina de Pecchi, Milan, Italy
Telephone: 39-2-9514717/737/770, Fax: 39-2-9514522

RACAL

PUBLICATION DATE: APRIL 1992

Copyright ©1992 by Racal-Dana Instruments Inc. Printed in the United States of America. All rights reserved.
This book or parts thereof may not be reproduced in any form without written permission of the publishers.

TABLE OF CONTENTS

1260-12 RELAY ACTUATOR MODULE

1.0	1260-12 Module Specifications	1-1
2.0	Installation Instructions	1-3
2.1	Unpacking and Inspection	1-3
2.2	Reshipment Instructions	1-3
2.3	Option 01 Installation	1-3
2.4	Module Installation	1-3
3.0	1260-12 Module Specific Syntax	1-4
3.1	Syntax	1-4
4.0	Drawings	1-8
5.0	Parts List	1-21

FIGURES

3-1	1260-12 Relay Diagram	1-4
3-2	1260-12	1-5
3-3	1260-12 Pin Connections	1-7

1.0 1260-12 Module Specification

The 1260-12 Relay Actuator Module is a 20 channel double-pole, double-throw switching module.

Specifications

User Connector:	Quick Disconnect
Maximum Switchable Voltage (Terminal-Terminal or Terminal-Chassis):	220 VDC, 220 VAC RMS
Maximum Switchable Current:	2 A DC or RMS
Maximum Switchable Power Per Channel:	60 W DC, 62.5 VA AC

DC Performance

Differential Thermal Offset:	< 3 V per channel
Path Resistance:	200 milliohm at 2A
Isolation:	$>10^9$ ohms

AC Performance

Capacitance	
Open Channel:	<25 pF
Channel-Chassis:	<25 pF
Hi-Lo:	<50 pF
Bandwidth, (-3 dB, 50 ohm Termination):	35 MHz (typical)
Insertion Loss, (50 ohm Termination):	<.20 dB at 100 kHz <.25 dB at 1 MHz <0.5 dB at 10 MHz
Crosstalk, (50 ohm Termination):	<-75 dB at 100 kHz <-60 dB at 1 MHz <-40 dB at 10 MHz
Switching Time:	≤ 10 ms / channel

General

Cooling (Airflow Backpressure)	4.0 l/s, 0.5 mm H_2O
Power Requirements:	+5V:0.4A (2.5A with Option 01 installed) +24V: 10 mA per relay
Weight:	1.174 kg (2.59 lbs) 1.315 kg (2.90 lbs)
Minimum Option 01 Firmware Revision:	2.1

2.0 Installation Instructions

2.1 Unpacking and Inspection

Before unpacking the switching module, check the exterior of the shipping carton for any signs of damage. All irregularities should be noted on the shipping bill. Remove the instrument from its carton, preserving the factory packaging as much as possible. Inspect the switching module for any defect or damage. Immediately notify the carrier if any damage is apparent. Have a qualified person check the instrument for safety before use.

2.2 Reshipment Instructions

Use the original packing when returning the switching module to Racal-Dana for calibration or servicing. The original shipping carton and the instrument's plastic foam will provide the necessary support for safe reshipment. If the original packing is unavailable, wrap the switching module in plastic sheeting and use plastic spray foam to surround and protect the instrument. Reship in either the original or a new shipping carton.

2.3 Option 01 Installation

Installation of the Option 01 to the 1260-12 is described in the Installation section of the 1260 Series VXI Switching Cards Manual.

2.4 Module Installation

Installation of the 1260-12 Switching Module into a VXI mainframe, including the setting of DIP switches, is described in the Installation section of the 1260 Series VXI Switching Cards Manual. The ID byte DIP switches,SW1-5 and SW1-6, should both be set OFF.

3.0 1260-12 Module Specific Syntax

NOTE

The 1260-12 Relay Actuator Module is supported by Option 01 Operating Systems at Revision levels 2.1 and above.

The Module Specific Syntax for the 1260-12 is required in the use of the OPEN and CLOSE commands. It will also appear in data output by the Master in response to the PDATAOUT and PSETUP commands.

3.1 Syntax

The Module Specific Syntax for the 1260-12 Relay Actuator module is as follows:

<module address>.<channel>

where <module address> is the address.

<channel> is the reference number of the relay to be closed, value 0 - 19.

NOTE

The <module address> used here is not the VXIbus defined logical address of the 1260 Master. It is peculiar to the 1260 Series and describes the switching module in relation to the Master. This address corresponds to the binary value of the switch setting of SW1 on the switching module PCB.

3.1.1 Each <channel> is a double-pole, double throw relay with two normally open and normally closed connections. The connections are between the Common and the Open pins if the <channel> is OPENed, and between the Common and the Closed pins if the <channel> is CLOSED. The pin connections made by each CLOSE <card address>.<channel> command are given in Figure 3-2.

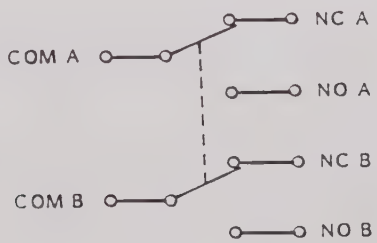

Figure 3-1, Relay Diagram

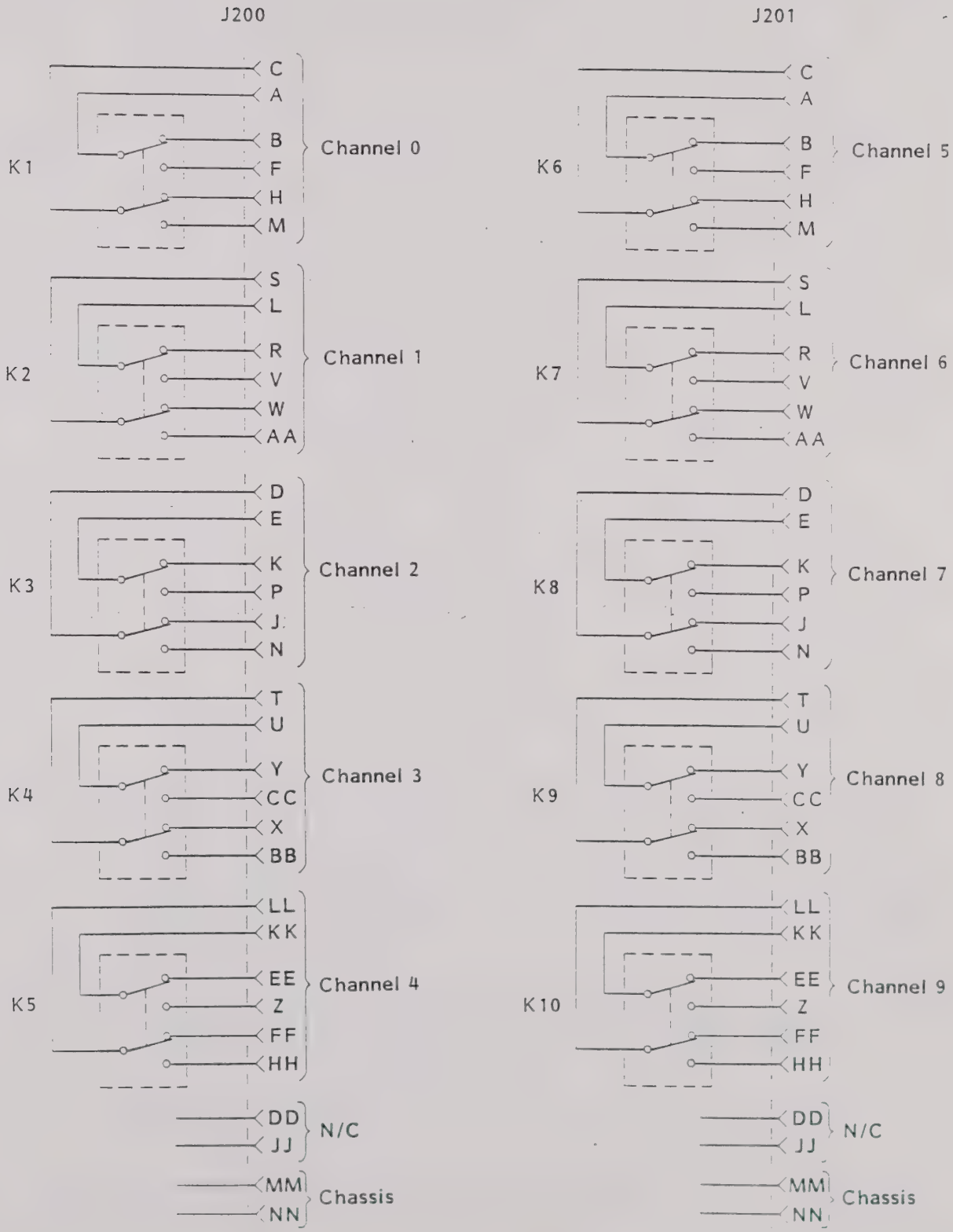

Figure 3-2, 1260-12

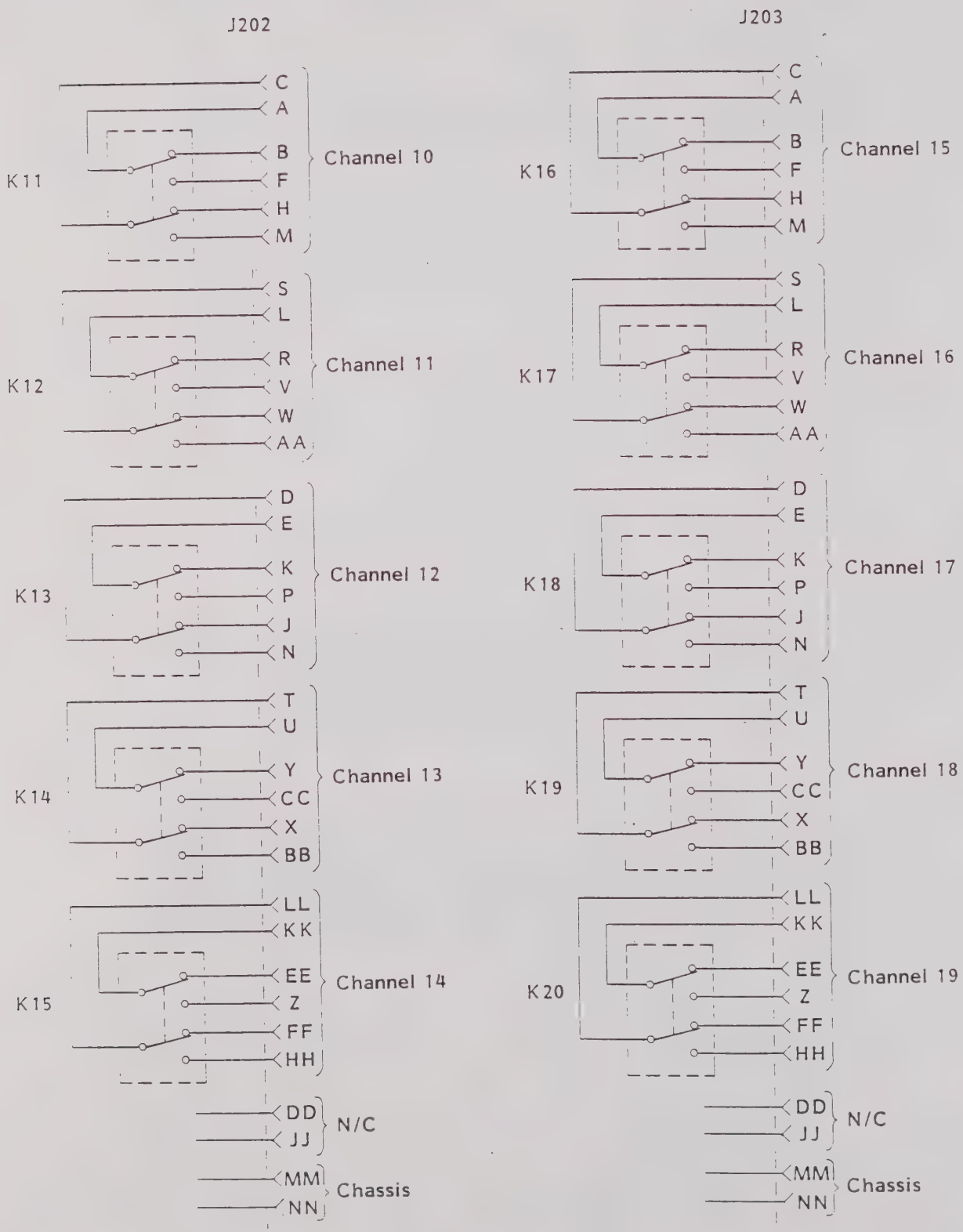

Figure 3-2, 1260-12 (continued)

3.1.2 Refer to Figure 3-3 for the pin configurations of connectors J200, J201, J202 and J203 on the 1260-12.

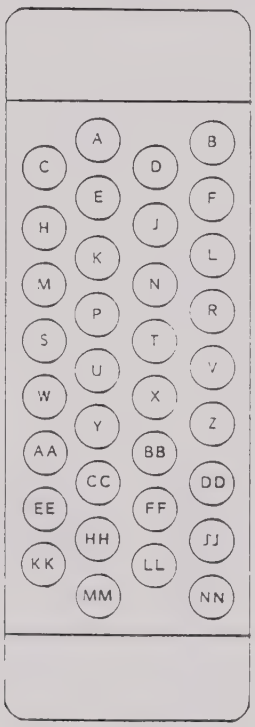

Figure 3-3, 1260-12 Pin Connections

3.1.3 The Racal-Dana part number for the mating connectors for 1260-12 connectors J200 and J201 is 601855-034, and the pins required for the mating connector are Racal-Dana Part Number 601857. 34 pins are required to fully populate each mating connector.

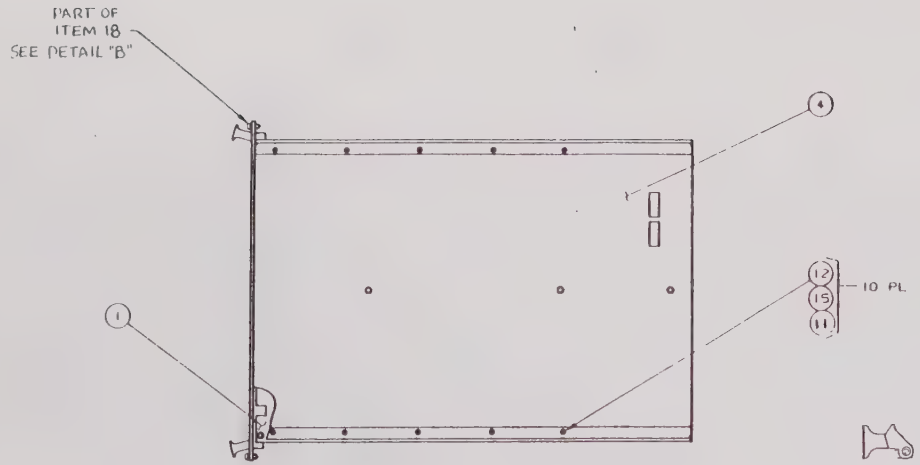

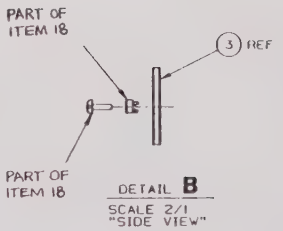

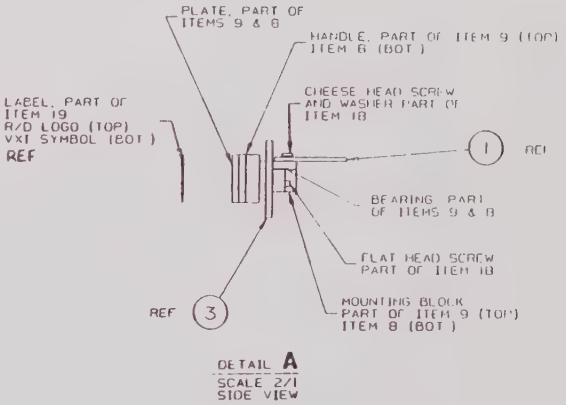

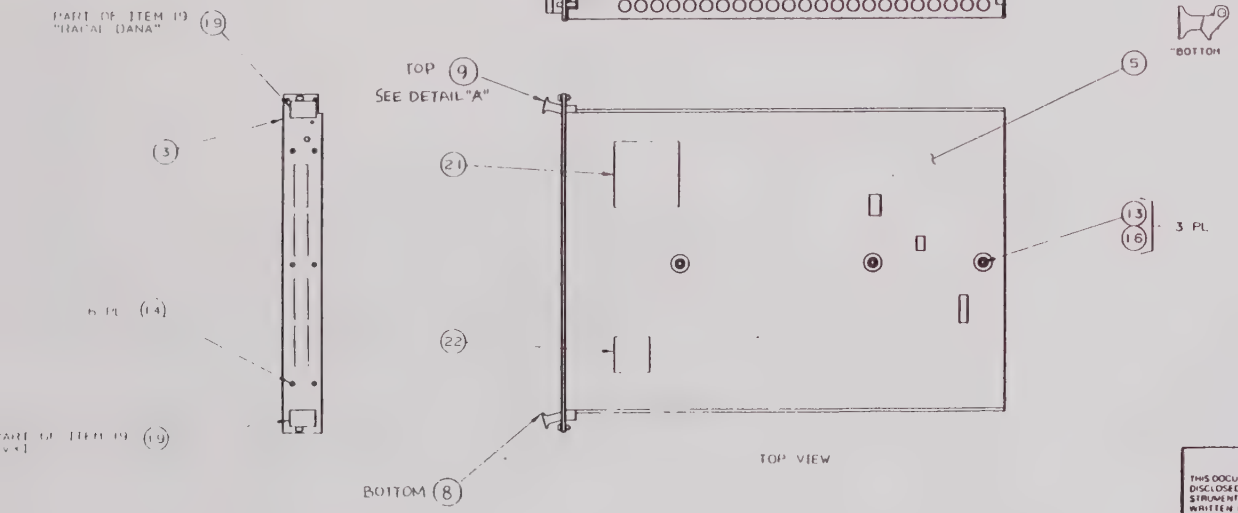

PROPRIETARY NOTICE
THIS DOCUMENT AND THE TECHNICAL DATA HEREON DISCLOSED ARE PROPRIETARY TO RACAL DANA INSTRUMENTS INC AND SHALL NOT WITHOUT EXPRESS WRITTEN PERMISSION OF RACAL DANA INSTRUMENTS INC BE USED RELEASED OR DISCLOSED IN WHOLE OR IN PART OR USED TO SOLICIT QUOTATIONS FROM A COMPETITIVE SOURCE OR USED FOR MANUFACTURE BY ANYONE OTHER THAN RACAL DANA INSTRUMENTS INC THE INFORMATION HEREON HAS BEEN DEVELOPED AT PRIVATE EXPENSE AND MAY ONLY BE USED FOR PURPOSES OF ENGINEERING EVALUATION AND FOR INCORPORATION INTO TECHNICAL SPECIFICATIONS AND OTHER DOCUMENTS WHICH SPECIFY PROCUREMENT OF PRODUCTS FROM RACAL DANA INSTRUMENTS INC

RACAL-DANA Instruments Inc.
4 GOODYEAR, IRVINE, CALIFORNIA 92714

DOCUMENT TITLE
FINAL ASSY, 1260-12

SIZE	CODE IDENT NO	DOCUMENT NO	REV
D	21793	404774	B
SCALE/2		SHEET 1 OF 2	

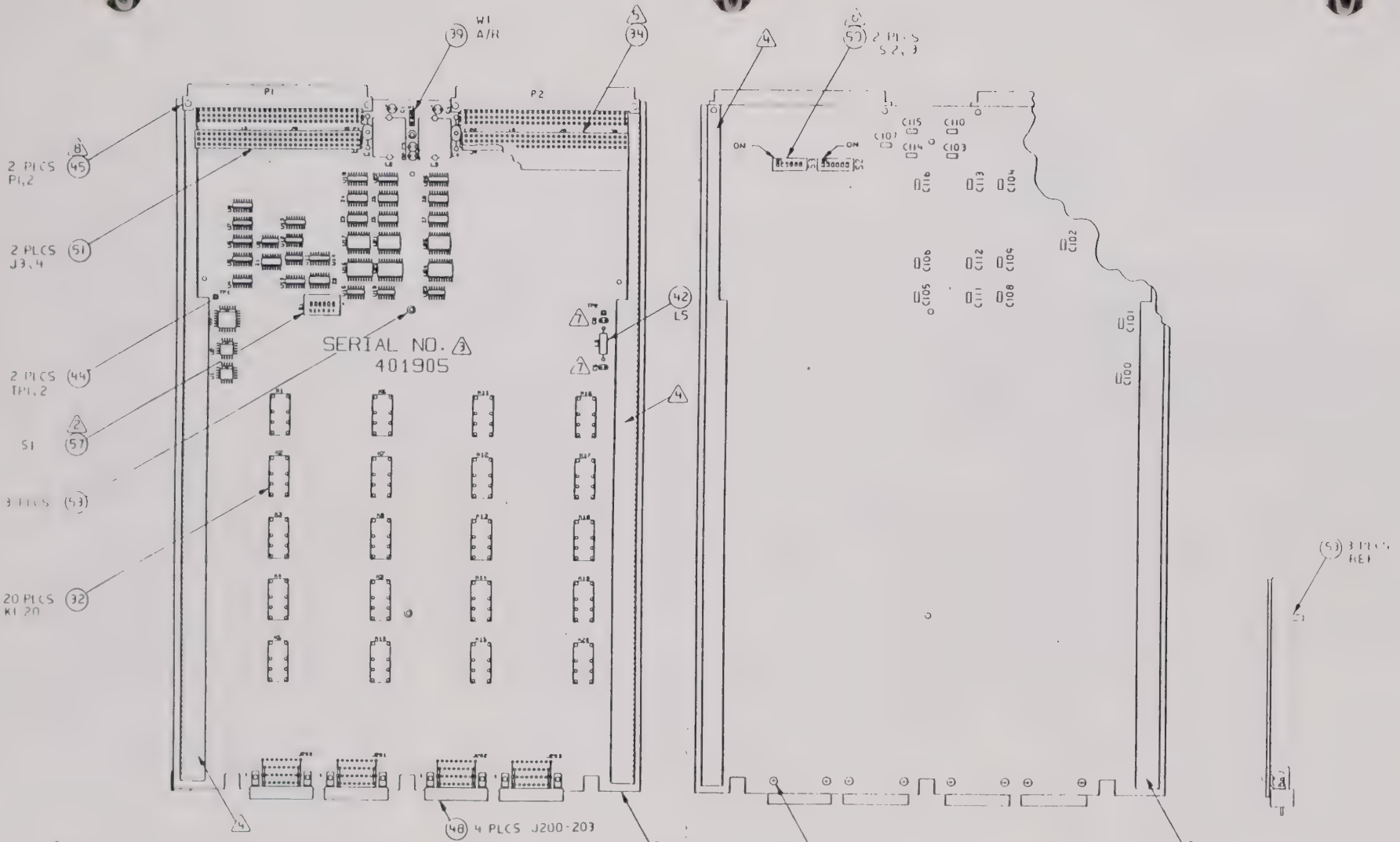

8 P1 AND P2 MUST BE INSTALLED FLUSH, AT RIGHT ANGLES TO PC BOARD.

7 C5 AND C6 ARE NOT INSTALLED.

6 SET ALL S2, S3 SWITCHES TO (ON) OR (CLOSED) OR (1) POSITION. DO NOT WAVE SOLDER.

5 INSTALL (ITEM 34). PCB JUMPER INTO (ITEM 51) J4

4 AREAS INDICATED TO BE FLAT AND FREE FROM SOLDER (BOTH SIDES).

3 INK STAMP SERIAL NO. ON COMPONENT SIDE IN INDICATED AREA.

2 SET S1 TO LOGICAL ADDRESS 1 PER TABLE 1, SHT 4 OF 4.

1. REFERENCE SCHEMATIC 431905.

PROPRIETARY NOTICE
THIS DOCUMENT AND THE TECHNICAL DATA HEREON DISCLOSED ARE PROPRIETARY TO RACAL DANA INSTRUMENTS INC AND SHALL NOT WITHOUT EXPRESS WRITTEN PERMISSION OF RACAL DANA INSTRUMENTS INC BE USED RELEASED OR DISCLOSED IN WHOLE OR IN PART OR USED TO SOLICIT QUOTATIONS FROM A COMPETITIVE SOURCE OR USED FOR MANUFACTURE BY ANYONE OTHER THAN RACAL DANA INSTRUMENTS INC THE INFORMATION HEREON HAS BEEN DEVELOPED AT PRIVATE EXPENSE AND MAY ONLY BE USED FOR PURPOSES OF ENGINEERING EVALUATION AND FOR INCORPORATION INTO TECHNICAL SPECIFICATIONS AND OTHER DOCUMENTS WHICH SPECIFY PROCUREMENT OF PRODUCTS FROM RACAL DANA INSTRUMENTS INC

RACAL-DANA Instruments Inc.
4 GOODYEAR IRVINE CALIFORNIA 92714

DOCUMENT TITLE: PCB ASSY, 1260-12

SIZE	CODE IDENT NO	DOCUMENT NO	REV
D	21793	401905	B

SCALE --- SHEET 1 OF 4

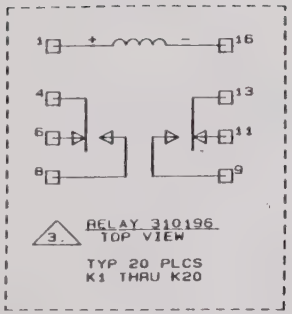

REF. DES.	IC TYPE	+5V PIN NO.	GND PIN NO
U17, 21, 25	2803		9
U16, 20, 24	74HCT273	20	10
U14	74HCT85	16	8
U13	74LS138	16	8
U11, 12, 15, 19, 23	74HCT164	14	7
U10, 18, 22, 26	74HCT166	16	8
U9	LM339	3	12
U7, 8	26LS32	16	8
U6	26LS31	16	8
U4, 5	74HCT253	16	8
U3	231154 (22V10H)	28	14
U2	231153 (16R4)	20	10
U1	231152 (16L8Q)	20	10

IC POWER AND GROUND CONNECTIONS

HIGHEST REF DES
Z8
W1
U26
TP2
S3
P2
L5
K20
J203
C116

PROPRIETARY NOTICE
THIS DOCUMENT AND THE TECHNICAL DATA HEREON DISCLOSED ARE PROPRIETARY TO RACAL DANA INSTRUMENTS INC AND SHALL NOT WITHOUT EXPRESS WRITTEN PERMISSION OF RACAL DANA INSTRUMENTS INC BE USED RELEASED OR DISCLOSED IN WHOLE OR IN PART OR USED TO SOLICIT QUOTATIONS FROM A COMPETITIVE SOURCE OR USED FOR MANUFACTURE BY ANYONE OTHER THAN RACAL DANA INSTRUMENTS INC THE INFORMATION HEREON HAS BEEN DEVELOPED AT PRIVATE EXPENSE AND MAY ONLY BE USED FOR PURPOSES OF ENGINEERING EVALUATION AND FOR INCORPORATION INTO TECHNICAL SPECIFICATIONS AND OTHER DOCUMENTS WHICH SPECIFY PROCUREMENT OF PRODUCTS FROM RACAL DANA INSTRUMENTS INC

RACAL-DANA Instruments Inc.
4 GOODYEAR, IRVINE, CALIFORNIA 92714

DOCUMENT TITLE

SCHEM., 1260-12

SIZE	CODE IDENT NO	DOCUMENT NO	REV
B	21793	431905	A

SCALE ——— SHEET 1 OF 11

4. C5 AND C6 ARE NOT INSTALLED.
3. RELAYS K1 THRU K20 ARE RACAL DANA P/N 310196.
   ALL RELAYS SHOWN IN DE-ENERGIZED POSITION.
2. RESISTOR NETWORKS ARE IN OHMS.
1. CAPACITOR VALUES ARE IN MICROFARADS, 50V, +/-20% UNLESS OTHERWISE SPECIFIED.

NOTES: UNLESS OTHERWISE SPECIFIED

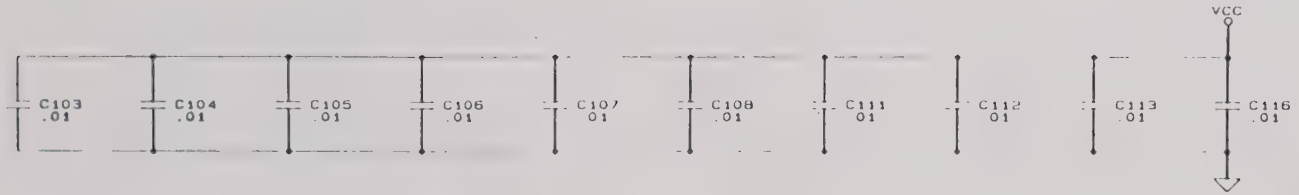

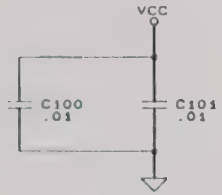

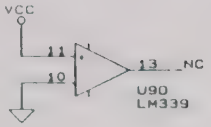

SIZE	CODE IDENT NO	DOCUMENT NO	REV
B	21793	431905	A
SCALE		SHEET 2 OF 11	

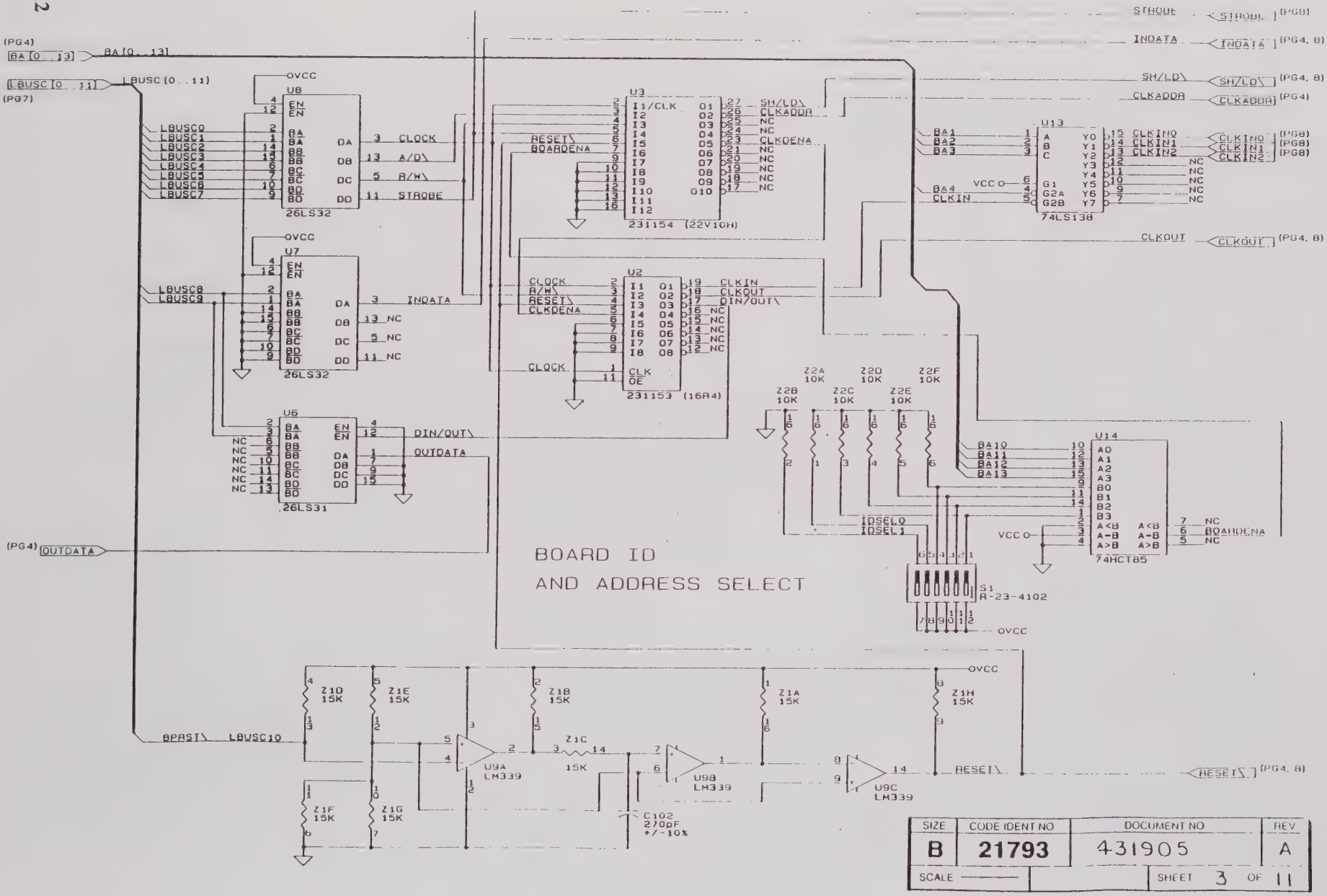

SIZE	CODE IDENT NO	DOCUMENT NO	REV
B	21793	431905	A
SCALE		SHEET 3 OF 11	

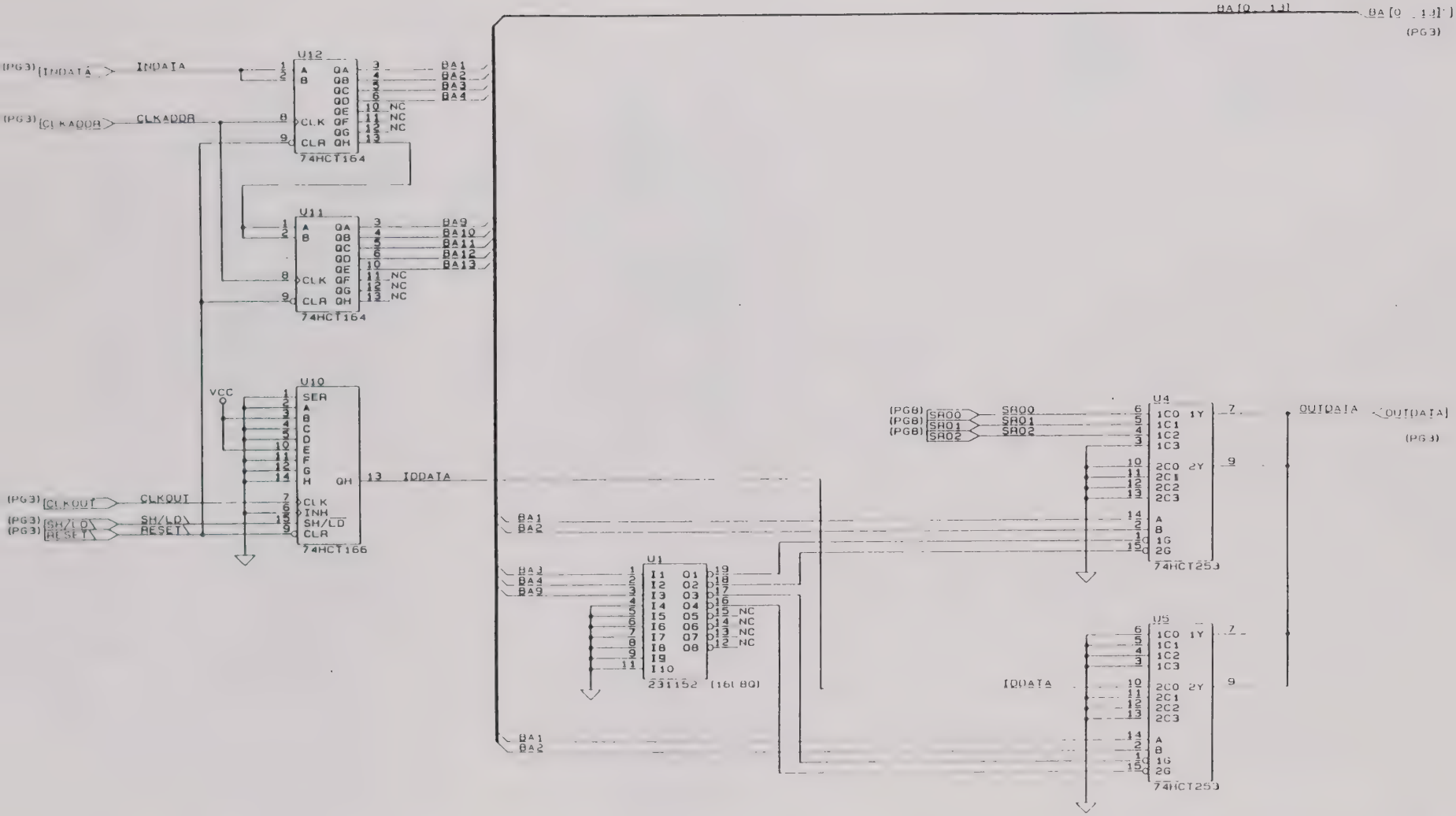

SIZE	CODE IDENT NO	DOCUMENT NO	REV
B	21793	431905	A
SCALE		SHEET 4 OF 11	

SIZE	CODE IDENT NO	DOCUMENT NO	REV
B	21793	431905	A
SCALE		SHEET 5 OF 11	

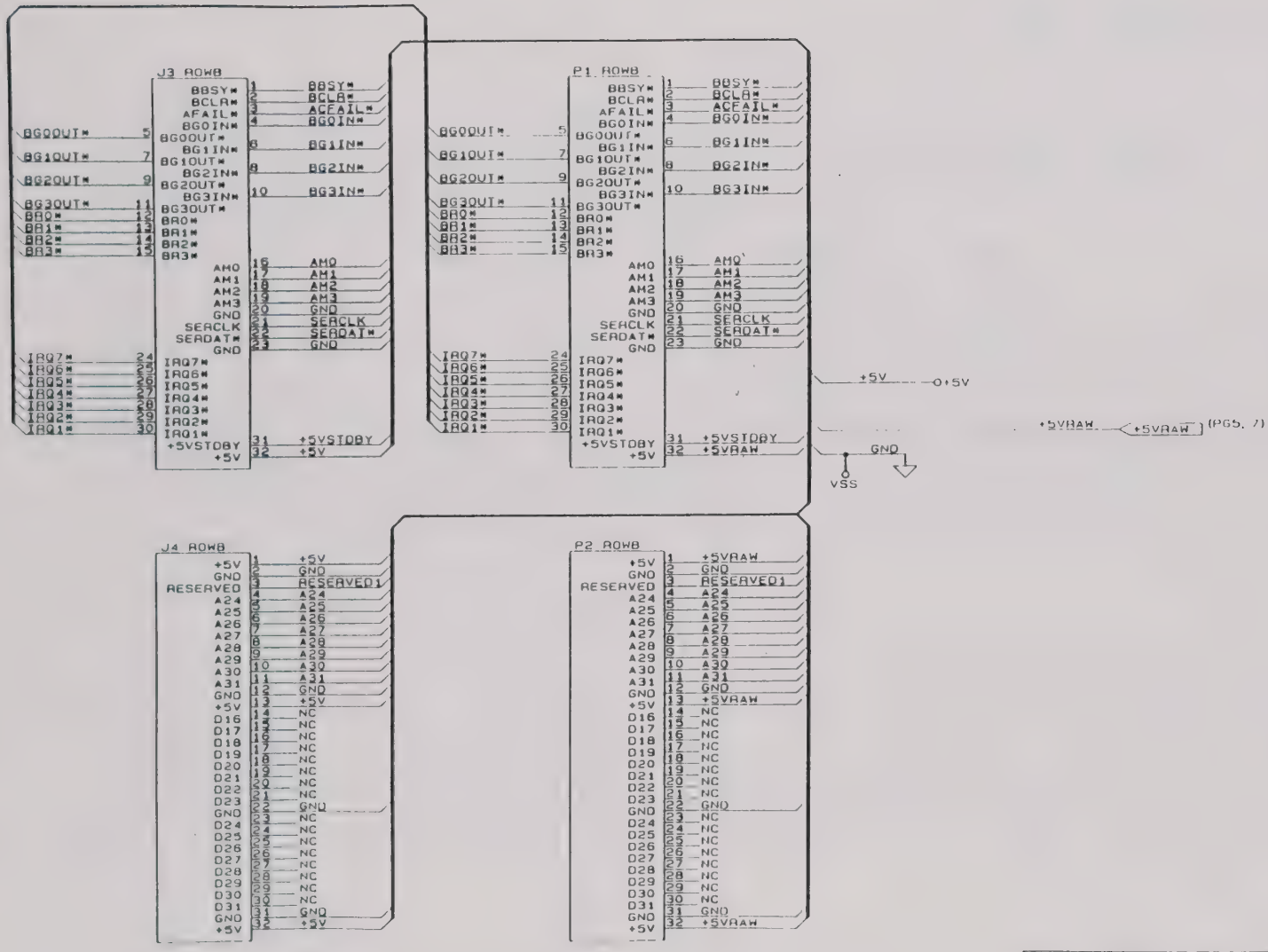

SIZE	CODE IDENT NO	DOCUMENT NO	REV
B	21793	431905	A
SCALE		SHEET 6 OF 11	

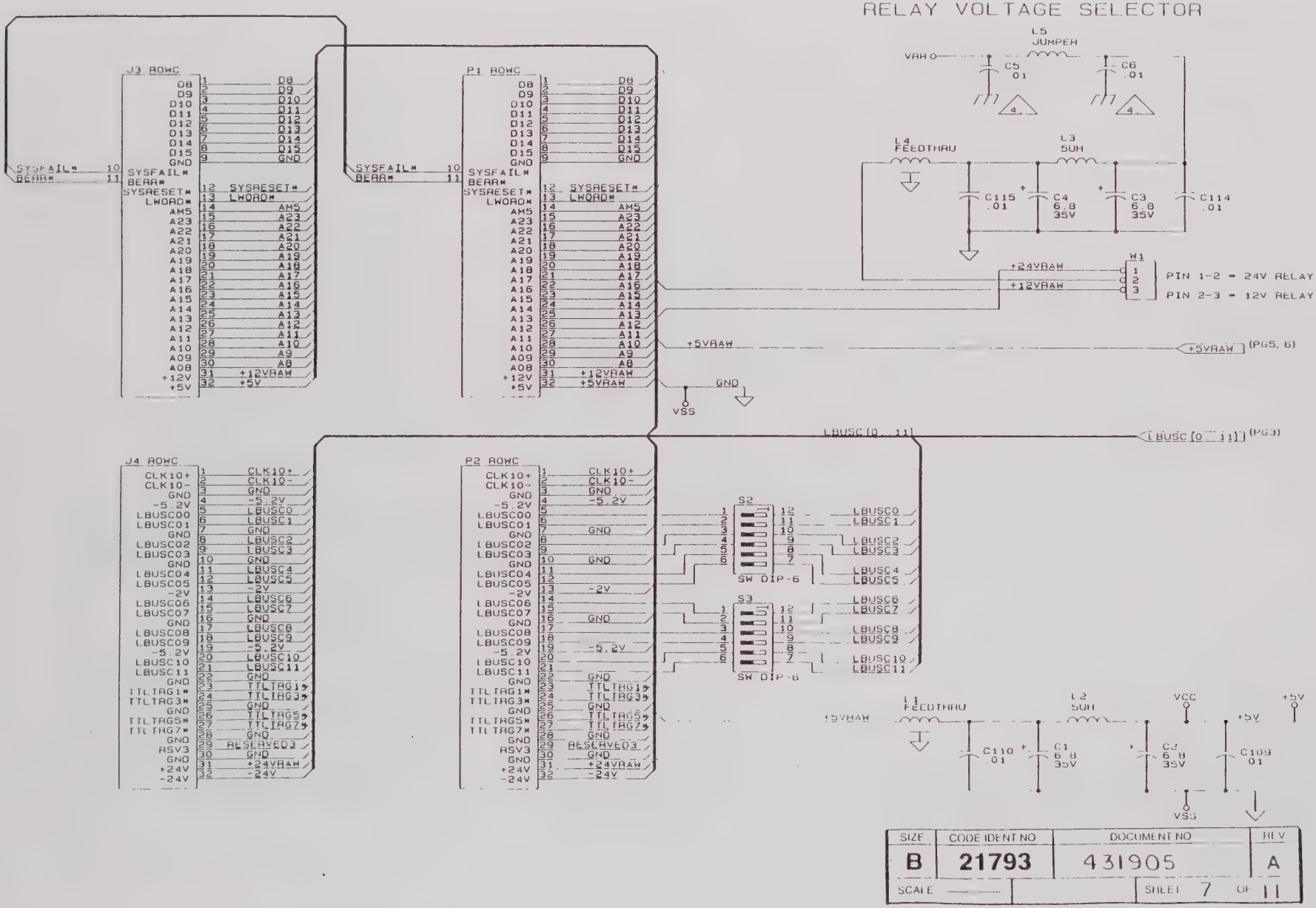

SIZE	CODE IDENT NO	DOCUMENT NO	REV
B	21793	431905	A
SCALE		SHEET 7 OF 11	

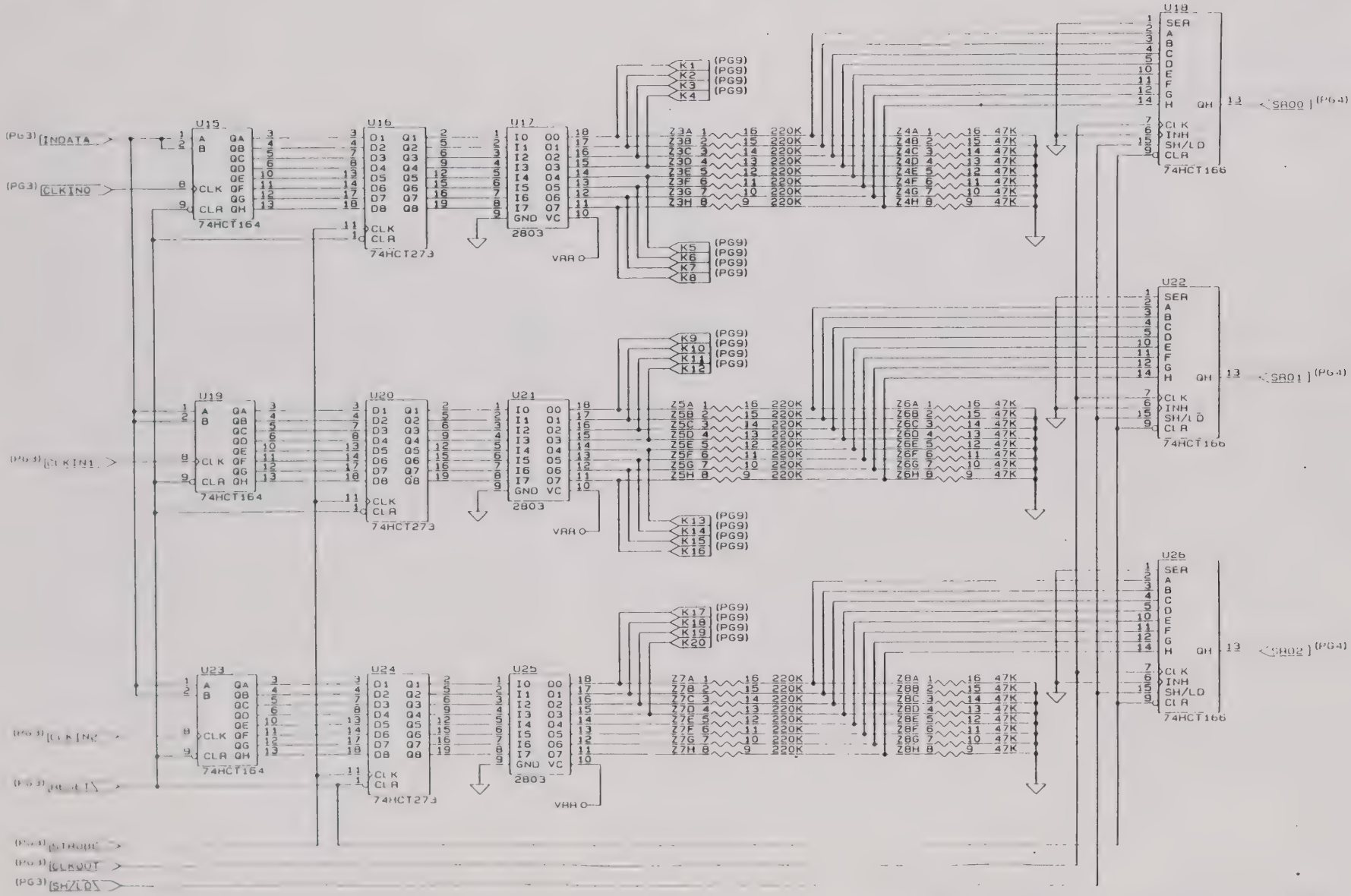

SIZE	CODE IDENT NO	DOCUMENT NO	REV
B	21793	431905	A
SCALE		SHEET 8 OF 11	

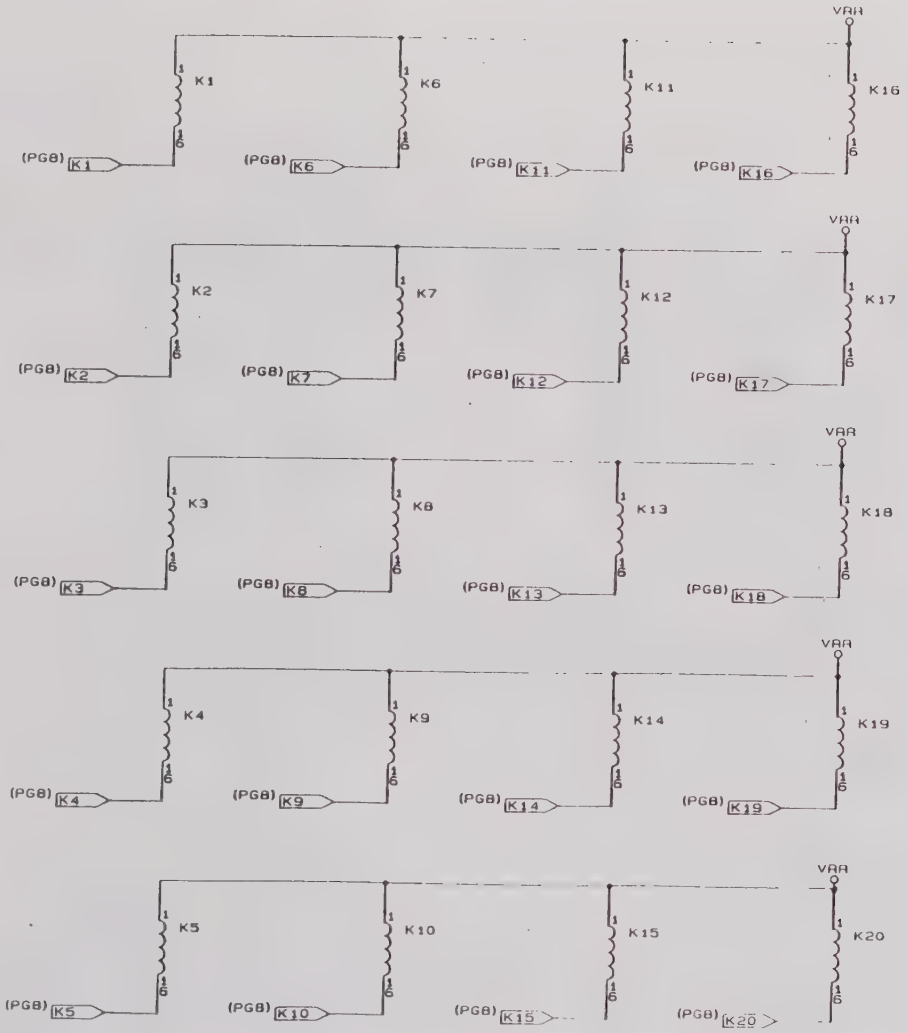

SIZE	CODE IDENT NO	DOCUMENT NO	REV
B	21793	431905	A
SCALE		SHEET 9 OF 11	

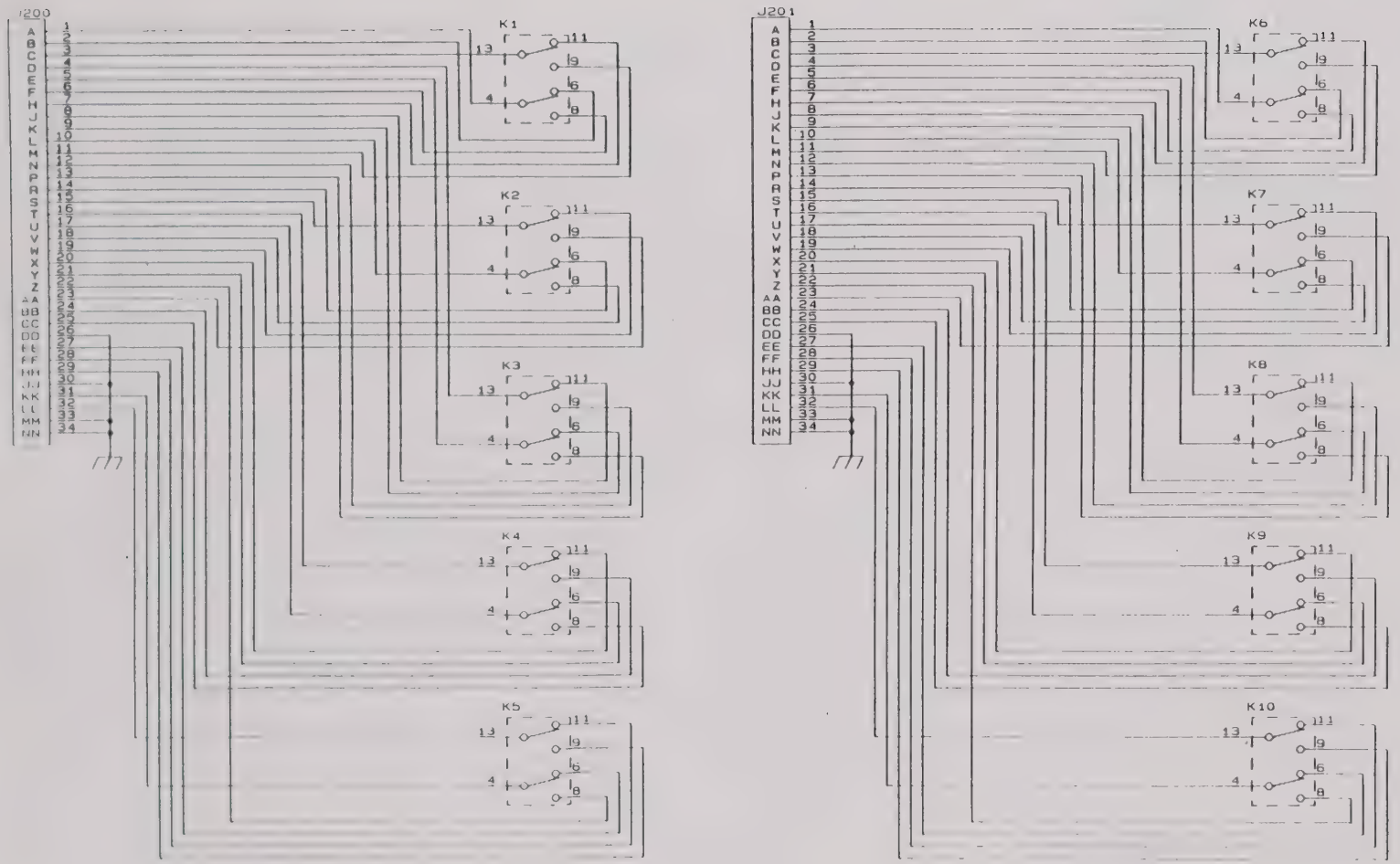

SIZE	CODE IDENT NO	DOCUMENT NO	REV
B	21793	431905	A
SCALE		SHEET 10 OF 11	

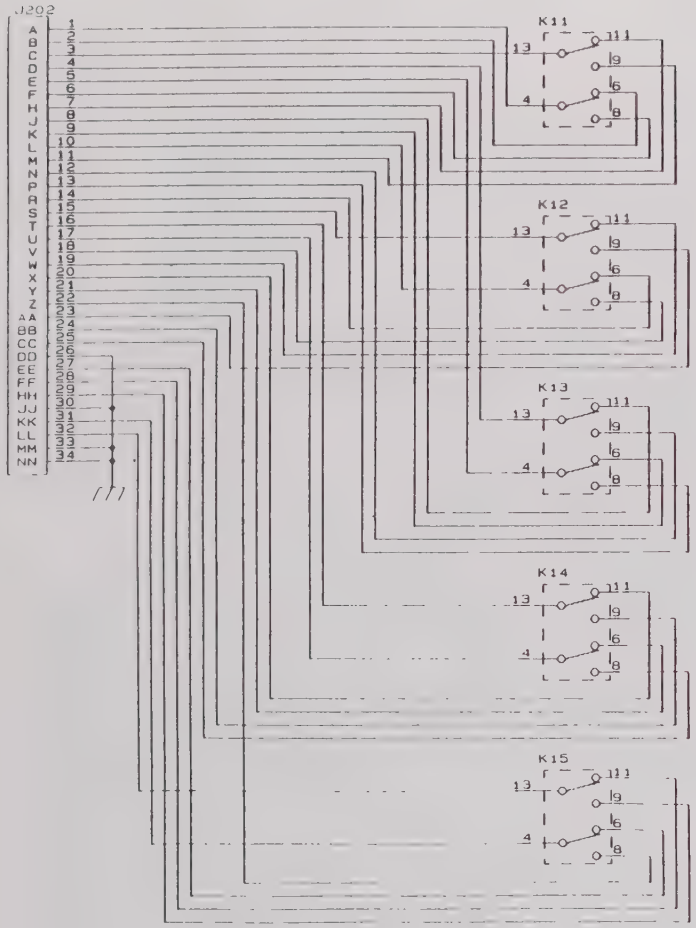

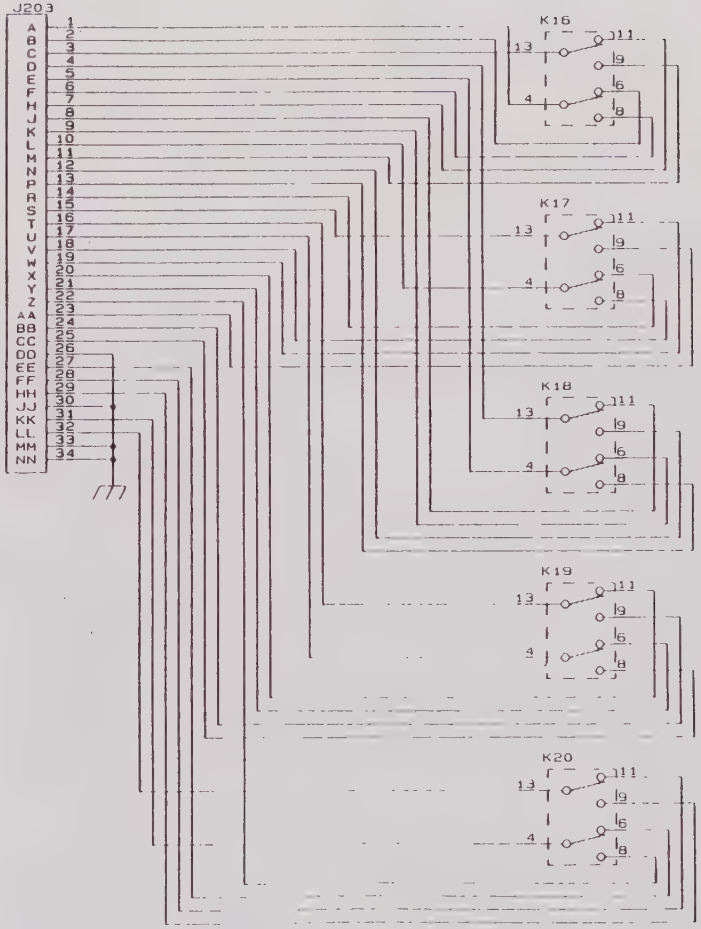

SIZE	CODE IDENT NO	DOCUMENT NO	REV
B	21793	431905	A
SCALE		SHEET 11 OF 11	

404774 FINAL ASSY., 1260-12

REF DESIG	RACAL-DANA P/N	DESCRIPTION	FSC	MANUFACTURER'S P/N
{1}1	401905	PCB ASSY., 1260-12	21793	401905
{3}1	455558-001	PANEL, FRONT, 1260-12	21793	455558-001
{4}1	455524	COVER, BOTTOM	21793	455524
{5}1	455525	COVER, TOP	21793	455525
{8}2	611264	HANDLE, EXTRACTOR, BOTTOM	62559	20817-327
{9}2	611265	HANDLE, EXTRACTOR, TOP	62559	20817-328
{11}10	617101	WASHER, FLAT, LIGHT SERIES, #2	-	-
{12}10	615014	SCREW, PPH, 2-56 X .250	-	-
{13}3	615049	SCREW, PPH, 4-40 X .875	-	-
{14}6	615512	SCREW, PFH, 2-56X.188	-	-
{15}10	617126	WASHER, LOCK, #2, LIGHT SERIES	-	-
{16}3	617127	WASHER, LOCK, #4, LIGHT SERIES	-	-
{18}1	611266	MOUNTING HARDWARE, HANDLE	62559	21100-745
{19}1	921148	LABEL SET, VXI-VME	21793	921148
{21}1	921059	LABEL, CAUTION, STATIC	21793	921059
{22}1	920710	LABEL, IDENIFICATION	21793	920710
{23}1	404934	SHIPPING KIT, 1260-12	21793	404934

404934 SHIPPING KIT, 1260-12

REF DESIG	RACAL-DANA P/N	DESCRIPTION	FSC	MANUFACTURER'S P/N
{3}2	455540	KEY, LOCKOUT, TTL, A/C	21793	455540
{4}2	455541	KEY, LOCKOUT, TTL, A/C	21793	455541
{5}2	455542	KEY, LOCKOUT, TTL, A/C	21793	455542
{7}4	601855-034	CONNECTOR, SGMC, CABLE PLUG	21793	601855-034
{8}136	601857	CONTACT, SGMC, MAIL	28198	M5422N
{10}3	615014	SCREW, PPH, 2-56 X .250	-	-

401905 PCB ASSY., 1260-12

REF DESIG	RACAL-DANA P/N	DESCRIPTION	FSC	MANUFACTURER'S P/N
C1	110126	CAP, TANTA, 6.8UF, 35V, 20 PERCENT	05397	T355F685M035A5
C2	110126	CAP, TANTA, 6.8UF, 35V, 20 PERCENT	05397	T355F685M035A5
C3	110126	CAP, TANTA, 6.8UF, 35V, 20 PERCENT	05397	T355F685M035A5
C4	110126	CAP, TANTA, 6.8UF, 35V, 20 PERCENT	05397	T355F685M035A5
C100-101	R-21-1801	CAP, CHIP, 10 NF	95275	VJ1206Y103MF
C103-116	R-21-1801	CAP, CHIP, 10 NF	95275	VJ1206Y103MF
J3	601925	CONNECTOR, PCB, RECEPT, 3 ROW, 96P	52072	618008
J4	601925	CONNECTOR, PCB, RECEPT, 3 ROW, 96P	52072	618008
J200	601856-034	CONNECTOR, SMPL, PCB RCP	28198	SMPL34FOTOL8
J201	601856-034	CONNECTOR, SMPL, PCB RCP	28198	SMPL34FOTOL8
J202	601856-034	CONNECTOR, SMPL, PCB RCP	28198	SMPL34FOTOL8
J203	601856-034	CONNECTOR, SMPL, PCB RCP	28198	SMPL34FOTOL8
K1-K20	310196	RELAY, 2FORM C	61529	DS2YE-S-DC24V
L1	100164	CAP, FEED-THRU,800PF, 50V	00779	842448-2
L2	310193	CHOKE, SHIELDED, 5UH	91637	IH-5-5-10
L3	310193	CHOKE, SHIELDED, 5UH	91637	IH-5-5-10
L4	100164	CAP, FEED-THRU,800PF, 50V	00779	842448-2
L5	600245	JUMPER, INSULATED	52210	L-2007-1
P1	601675	CONNECTOR, EUROCARD TYPE C, 96-PIN	00779	532505-1
P2	601675	CONNECTOR, EUROCARD TYPE C, 96-PIN	00779	532505-1
S1	R-23-4102	SWITCH,6-WAY,SINGLE THROW	3V841	206-006ST
S2	601915	SWITCH, DIP 6 POS, SMD	91506	ADF-06ST
S3	601915	SWITCH, DIP 6 POS, SMD	91506	ADF-06ST
TP1	601197	POST, TEST, .025 SQ	00779	6-87022-6
TP2	601197	POST, TEST, .025 SQ	00779	6-87022-6
U6	231125	IC, DIGITAL, LINE DRIVER	27014	DS26LS31MN
U7	231096	IC, QUAD DIFF RECEIVER	01295	AM26LS32ACD
U8	231096	IC, QUAD DIFF RECEIVER	01295	AM26LS32ACD
U9	231093	IC, QUAD COMPARATOR	04713	LM339D
U10	231120	IC, 8-BIT, PARALLEL/SERIAL OUT S.R.	18324	74HCT166D
U11	231131	IC, DIGITAL, SHIFT REGISTER	18324	PC74HCT164D
U12	231131	IC, DIGITAL, SHIFT REGISTER	18324	PC74HCT164D
U13	231094	IC, DEMUX DECODER	18324	N74LS138D
U14	231135	IC, DIGITAL, 4-BIT COMPARATOR	18324	PC74HCT85D
U15	231131	IC, DIGITAL, SHIFT REGISTER	18324	PC74HCT164D
U16	231130	IC, DIGITAL, FLIP FLOP	18324	PC74HC273
U17	231098	IC, SOIC TRANSISTOR	56289	ULN-2803LW
U18	231120	IC, 8-BIT, PARALLEL/SERIAL OUT S.R.	18324	74HCT166D
U19	231131	IC, DIGITAL, SHIFT REGISTER	18324	PC74HCT164D
U20	231130	IC, DIGITAL, FLIP FLOP	18324	PC74HC273
U21	231098	IC, SOIC TRANSISTOR	56289	ULN-2803LW
U22	231120	IC, 8-BIT, PARALLEL/SERIAL OUT S.R.	18324	74HCT166D
U23	231131	IC, DIGITAL, SHIFT REGISTER	18324	PC74HCT164D
U24	231130	IC, DIGITAL, FLIP FLOP	18324	PC74HC273
U25	231098	IC, SOIC TRANSISTOR	56289	ULN-2803LW
U26	231120	IC, 8-BIT, PARALLEL/SERIAL OUT S.R.	18324	74HCT166D
W1	500022	WIRE, BARE COPPER/TIN, 22 GA	21793	500022
Z1	080114	RES NETWORK, 16P8R, 15K	73138	628-AL-153J
Z2	080120	RES NETWORK, 10K	11236	767-161R10K
Z3	080119	RES NETWORK, 220K	91637	SOMC-1603-224K
Z4	080117	RES NETWORK, 16P8R, 47K	73138	628-AL-473J
Z5	080119	RES NETWORK, 220K	91637	SOMC-1603-224K
Z6	080117	RES NETWORK, 16P8R, 47K	73138	628-AL-473J
Z7	080119	RES NETWORK, 220K	91637	SOMC-1603-224K
Z8	080117	RES NETWORK, 16P8R, 47K	73138	628-AL-473J
(34)1	401951	PCB ASSY., LBUS JUMPER	21793	401951
(35)1	411905	PCB, 1260-12 (UNLOADED)	21793	411905
(53)3	611227	SPACER, PRESS, #4, PCB	46384	KFSE-116-20
(54)8	615012	SCREW, PPH, 2-56 X .125	-	-
(58)A/R	920962	LOCTITE, 242, MED STR.	05972	272

List of Suppliers

FSC	SUPPLIER
00779	AMP INC. HARRISBURG, PA
01295	TEXAS INSTRUMENTS INC. DALLAS, TX
01526	GENICOM CORP. WAYNESBORO, VA
02735	RCA (SOLID STATE DIV.) SOMERVILLE, NEW JERSEY
03508	GENERAL ELECTRIC CO. (SEMI-CONDUCTOR PRODUCTS) AUBURN, NY
04713	MOTOROLA INC. (SEMICONDUCTOR PRODUCTS DIV) PHOENIX, AZ
05397	UNION CARBIDE CORP (MATERIALS SYSTEMS DIV) CLEVELAND, OHIO
05972	LOCTITE CORP HARTFORD, CONN
06383	PANDUIT CORP TINLEY PARK, CA
06540	AMATOM ELECTRONIC HARDWARE NEW ROCHELLE, NY
06776	ROBINSON NUGENT INC. NEW ALBANY, IN
07263	FAIRCHILD (SEMICONDUCTOR DIV.) MOUNTAIN VIEW, CA
08261	SPECTRA-STRIP CORP GARDEN GROVE, CA
11236	CTS OF BERNE INC. BERNE, INDIANA
16956	DENNISON MFG. CO. FRAMINGTON, MA
18324	SIGNETICS INC. SUNNYVALE, CA
21793	RACAL-DANA INSTRUMENTS INC. IRVINE, CA
22526	DUPONT CONNECTOR CO. NEW CUMBERLAND, PA
27014	NATIONAL SEMI-CONDUCTOR CORP. SANTA CLARA, CA
29005	STORM PRODUCTS CO. LOS ANGELES, CA
34359	THREE (3) M CO. (COMMERCIAL TAPE DIV.) ST. PAUL, MN
52072	CIRCUIT ASSY. CORP. COSTA MESA, CA
52210	GETTING ENGRG & MFG. CO. SPRING MILLS, PA
53387	THREE (3) M CO. ST. PAUL, MN
55322	SAMTEC, INC. NEW ALBANY, IN
56289	SPAGUE ELECTRIC CO. N. ADAMS, MA
61529	AROMAT CORP. CUPERTINO, CA
62559	SCHROFF, INC. WARWICK, RI
65832	AMERICAN RESEARCH ENGRG ELGIN, IL
70903	BELDEN CORP. CHICAGO, IL
73138	BECKMAN INSTRUMENTS FULLERTON, CA
73445	AMPEREX ELECTRONIC CORP. HICKSVILLE, NY
78189	ILLINOIS TOOL WORKS, INC. (SHAKEPROOF, DIV.) ELGIN, IL
81349	MILITARY SPECIFICATION
86928	SEASTROM MFG CO. INC. GLENDALE, CA
91637	DALE ELECTRONICS INC. COLUMBUS, NEBRASKA
92194	ALPHA WIRE ELIZABETH, NEW JERSEY
95275	VITRAMON, INC. BRIDGEPORT, CONNECTICUT
98291	SEALECTRO CORP. MAMARONECK, NY

40 DPST

1260-13 SIGNAL SWITCHING/RELAY MODULE

1260 VXI SWITCHING CARD

RACAL-DANA

RACAL-DANA INSTRUMENTS INC.

4 Goodyear Street, P.O. Box C-19541, Irvine, CA 92713
Telephone: 714/859-8999, Fax: 714/859-2505

RACAL INSTRUMENTS, LTD.

480 Bath Road, Slough, Berkshire, SL1 6BE, England
Telephone: 44-628 604455, Fax: 44-628 662017

RACAL SYSTEMS ELECTRONIQUE S.A.

18 Avenue Dutartre, 78150 Le Chesnay, France
Telephone: 33-1-3-955-8888, Fax: 33-1-3-955-6735

RACAL ELEKTRONIK SYSTEMS GmbH

Frankenforster Strasse 21, D-5060 Bergisch-Gladbach 1, Federal Republic of Germany
Telephone: 49-22-04-60081, Fax: 49-22-04-21491

RACAL SYSTEMS ELETTRONICA

Via Roma, 108/PAL, E1, 20060 Cassina de Pecchi, Milan, Italy
Telephone: 39-2-9514717/737/770, Fax: 39-2-9514522

RACAL

PUBLICATION DATE: APRIL 1992

Copyright ©1992 by Racal-Dana Instruments Inc. Printed in the United States of America. All rights reserved.
This book or parts thereof may not be reproduced in any form without written permission of the publishers.

TABLE OF CONTENTS

1260-13 SIGNAL SWITCHING/RELAY ACTUATOR MODULE

1.0	1260-13 Module Specification	1-1
2.0	Installation Instructions	1-3
2.1	Unpacking and Inspection	1-3
2.2	Reshipment Instructions	1-3
2.3	Option 01 Installation	1-3
2.4	Module Installation	1-3
3.0	1260-13 Module Specific Syntax	1-4
3.1	Syntax	1-4
3.2	Configuration Setting	1-4
3.3	Connector Pin Configuration	1-5
4.0	Drawing	1-11
5.0	Parts List	1-27

TABLES

3-1	1260-13 "A,B,C and D" Assignments	1-5

FIGURES

3-1	1260-13 Relay Diagram	1-5
3-2	1260-13 J200-J203 Pin Configurations	1-5
3-3	1260-13 Channel	1-8
3-4	1260-13 Components Per Channel	1-9
3-5	1260-13 Jumper Locations	1-10

1.0 1260-13 Module Specification

The 1260-13 Signal Switching/Relay Actuator module provides 40 independent channels of DPST switching. All pins of each channel are accessible through the front panel allowing each channel to finction independently. Each channel features mounting holes to allow the addition of a series and shunt element such as arc suppressor for contact protection, filter, etc. It also provides mounting holes for jumpers to allow the configuration of custom relay switching networks. The module permits switching up to 2 amps and 220 volts DC or 250 volts rms per channel.

Specifications (per independent channel)

Switch Configuration	40 DPST Relays
User Connector	Positronics SMPL 4 FOTO LB
Maximum Switchable Voltage	220 VDC, 250 VAC RMS
Maximum Switchable Current Per Channel	2 ADC or AC RMS
Maximum Switchable Power:	60 W or 62.5 VA
Path Resistance:	< 300 milliohms
Capacitance Per Independent Channel)	
Open Channel:	< 50 picofarads
Hi-Lo:	< 80 picofarads
Bandwidth, 50-ohm Termination:	100 MHz
Isolation, 50-ohm Termination:	0.2 dB to 100 kHz 0.3 dB to 1 MHz 0.5 dB to 10 MHz
Crosstalk, 50-ohm Termination:	< -70 dB to 100 kHz < -50 dB to 1 MHz < -25 dB to 10 MHz
Switching Time:	10 milliseconds

Cooling Requirements	
Airflow:	4 liters/sec
Backpressure:	0.5 mm of Hg
Power Requirements (I_{pm})	+5 V = 2.5 A +24 V = 10 mA per relay
Weight	1.26 kg (2.77 lbs) without Option 01 1.41 kg (3.11 lbs) with Option 01
Minimum Option 01 Firmware Revision:	5.1

2.0 Installation Instructions

2.1 Unpacking and Inspection

Before unpacking the switching module, check the exterior of the shipping carton for any signs of damage. All irregularities should be noted on the shipping bill. Remove the instrument from its carton, preserving the factory packaging as much as possible. Inspect the switching module for any defect or damage. Immediately notify the carrier if any damage is apparent. Have a qualified person check the instrument for safety before use.

2.2 Reshipment Instructions

Use the original packing when returning the switching module to Racal-Dana for calibration or servicing. The original shipping carton and the instrument's plastic foam will provide the necessary support for safe reshipment. If the original packing is unavailable, wrap the switching module in plastic sheeting and use plastic spray foam to surround and protect the instrument. Reship in either the original or a new shipping carton.

2.3 Option 01 Installation

Installation of the Option 01 to the 1260-13 is described in the Installation section of the 1260 Series VXI Switching Cards Manual.

2.4 Module Installation

Installation of the 1260-13 Switching Module into a VXI mainframe, including the setting of DIP switches, is described in the Installation section of the 1260 Series VXI Switching Cards Manual. The ID byte DIP switches, SW1-5 and SW1-6, should be set OFF.

3.0 1260-13 Module Specific Syntax

The module specific syntax for the 1260-13 is required in the use of the OPEN and CLOSE commands. It will also appear in the data output by the Master in response to the PDATAOUT and PSETUP commands.

3.1 Syntax

The Module Specific Syntax for the 1260-13 module is as follows:

<module address>.<channel>

where <module address> is the address.

<channel> is the channel number to be switched; the valid values for

<channel> range from 0 to 39

NOTE

The <module address> used here is not the VXIbus defined logical address of the 1260 Master. It is peculiar to the 1260 Series, and describes the switching module in relation to the Master. This address corresponds to the binary value of the switch setting of SW1 on the module PCB.

3.2 Configuration Setting

3.2.1 The 1260-13 Signal Switching/Relay Actuator module provides 40 independent channels of DPST switching. All four pins of each DPST relay are accessible through the front panel allowing each channel to function independently. Each channel features mounting holes to allow the addition of a series and shunt element such as arc suppressor for contact protection, filter, etc. It also provides mounting holes for jumpers to allow the configuration of custom relay switching networks. The module permits switching up to 2 amps and 220 volts, DC or 250 volts rms per channel.

3.2.2 A total of 200 pins are accessible through the front panel connectors, 22 of which are not used. Each channel is assigned 4 pins, A,B,C and D, as shown in Figure 3-1.

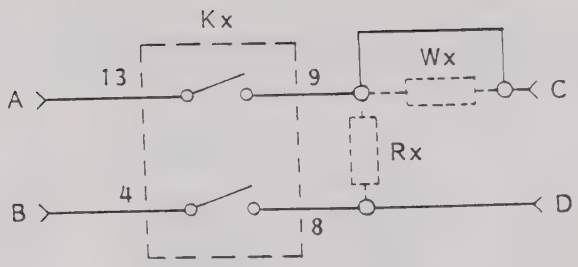

Figure 3-1, 1260-13 Relay Diagram

3.2.3 The corresponding pin assignments of the 4 pins for each channel is tabulated on Table 3-1.

3.3 Connector Pin Configuration

3.3.1 Refer to Figure 3-2 below for the pin configurations of the front panel connectors J200 to J203. J200 to J203 is Racal-Dana Part Number 601856-050. The mating connectors are Racal-Dana Part Number 601855-050, and mating pins are Racal-Dana Part Number 601857.

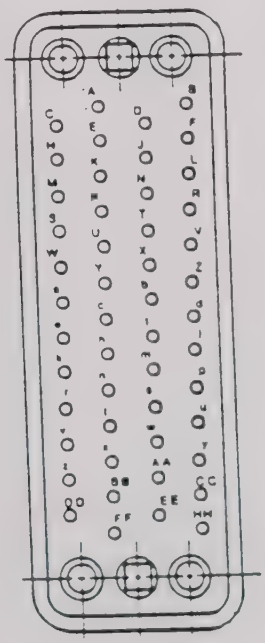

Figure 3-2, 1260-13 J200-J203 Pin Configurations

Table 3-1, 1260-13 "A,B,C and D" Assignments

CHANNEL NO.	Pin A	Pin C	Pin B	Pin D
00	J200-s	J200-p	J200-r	J200-n
01	J200-m	J200-j	J200-k	J200-h
02	J200-f	J200-d	J200-e	J200-c
03	J200-b	J200-Z	J200-a	J200-Y
04	J200-X	J200-V	J200-W	J200-U
05	J200-T	J200-R	J200-S	J200-P
06	J200-N	J200-L	J200-M	J200-K
07	J200-J	J200-F	J200-H	J200-E
08	J201-f	J201-d	J201-e	J201-c
09	J201-b	J201-Z	J201-a	J201-Y
10	J201-X	J201-V	J201-W	J201-U
11	J201-T	J201-R	J201-S	J201-P
12	J201-N	J201-L	J201-M	J201-K
13	J201-J	J201-F	J201-H	J201-E
14	J200-EE	J200-CC	J200-DD	J200-BB
15	J200-AA	J200-y	J200-z	J200-x
16	J202-X	J202-V	J202-W	J202-U
17	J202-T	J202-R	J202-S	J202-P
18	J202-N	J202-L	J202-M	J202-K
19	J202-J	J202-F	J202-H	J202-E
20	J201-EE	J201-CC	J201-DD	J201-BB
21	J201-AA	J201-y	J201-z	J201-x
22	J201-w	J201-u	J201-v	J201-t
23	J201-s	J201-p	J201-r	J201-n
24	J203-N	J203-L	J203-M	J203-K
25	J203-J	J203-F	J203-H	J203-E
26	J202-EE	J202-CC	J202-DD	J202-BB
27	J202-AA	J202-y	J202-z	J202-x
28	J202-w	J202-u	J202-v	J202-t
29	J202-s	J202-p	J202-r	J202-n
30	J202-m	J202-j	J202-k	J202-h
31	J202-f	J202-d	J202-e	J202-c
32	J203-EE	J203-CC	J203-DD	J203-BB
33	J203-AA	J203-y	J203-z	J203-x
34	J203-w	J203-u	J203-v	J203-t
35	J203-s	J203-p	J203-r	J203-n
36	J203-m	J203-j	J203-k	J203-h
37	J203-f	J203-d	J203-e	J203-c
38	J203-b	J203-Z	J203-a	J203-Y
39	J203-X	J203-V	J203-W	J203-U

Table 3-1, 1260-13 "A,B,C and D" Assignments (continued)

COM	A	B
0	J200-D	J200-C
1	J200-w	J200-v
2	J201-m	J201-k
3	J202-b	J202-a
4	J203-T	J203-S

Chassis ground

J200-A	J200-FF
J201-A	J201-FF
J202-A	J202-FF
J203-A	J203-FF

3.3.2 Figure 3-3 shows a 1260-13 channel with a series and shunt element associated with each channel. The series elements are designated W1 to W40 while the shunt elements are designated R1 to R40. To allow immediate use of the module, a zero-ohm jumper is installed on all positions for W1 to W40. No component is installed on R1 to R40.

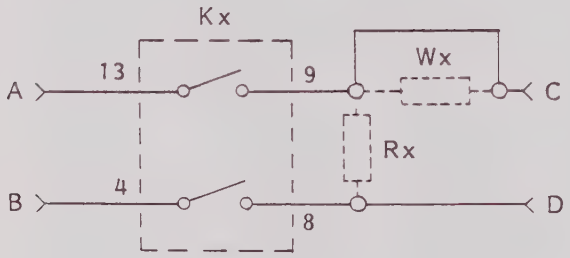

Figure 3-3, 1260-13 Channel

3.3.3 To install a shunt element at a particular, locate the "R" position which has a numerical assignment that is one higher than the channel number. For example, the shunt element associated with CH 19 will have the designation R20. The same procedure applies to the installation of a series element except, instead of an "R" designation, a series element will be installed on a "W" position. Since the module is shipped with jumpers installed on W1 to W40, installation of a series element will first require the removal of the jumper on the location of interest. Figure 3-4 summarizes the components associated with each channel. It also shows how the series and shunt elements are connected to the relay which is useful when the elements being installed have associated polarities.

3.3.4 Custom relay switching networks can be implemented by using jumpers and mounting holes on the module. Referring to Figure 3-4, mounting holes are provided on the "A" and "B" side of each relay. In addition, a pair of "common" lines with mounting holes run alongside each column of 8 relays. These lines can be used to implement a multiplexer using the 8 adjacent relays. For example, to implement an 8 x 1 multiplexer using K1 to K8, use jumpers to connect E1-1, to E1-2, E2-1 to E2-2,..., E16-1 to E16-2 (See Figure 3-5). K1 to K8 now composes a 2-wire, 8 x 1 multiplexer with COM0A and COM0B as the common pair. The other four columns of eight relays can be configured in the same manner to provide a total of five 8 x 1 multiplexers. The pin assignment of the common pairs in shown on Table 3-1.

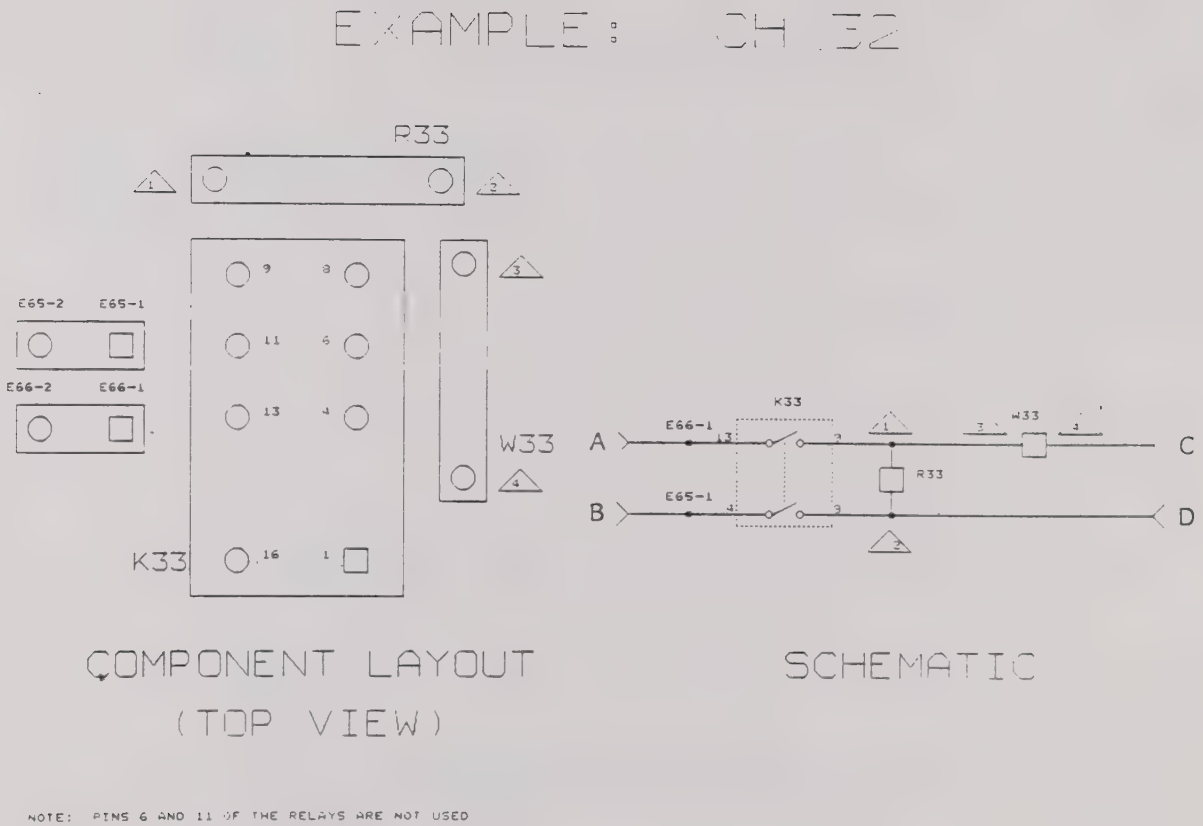

Figure 3-4, 1260-13 Components Per Channel

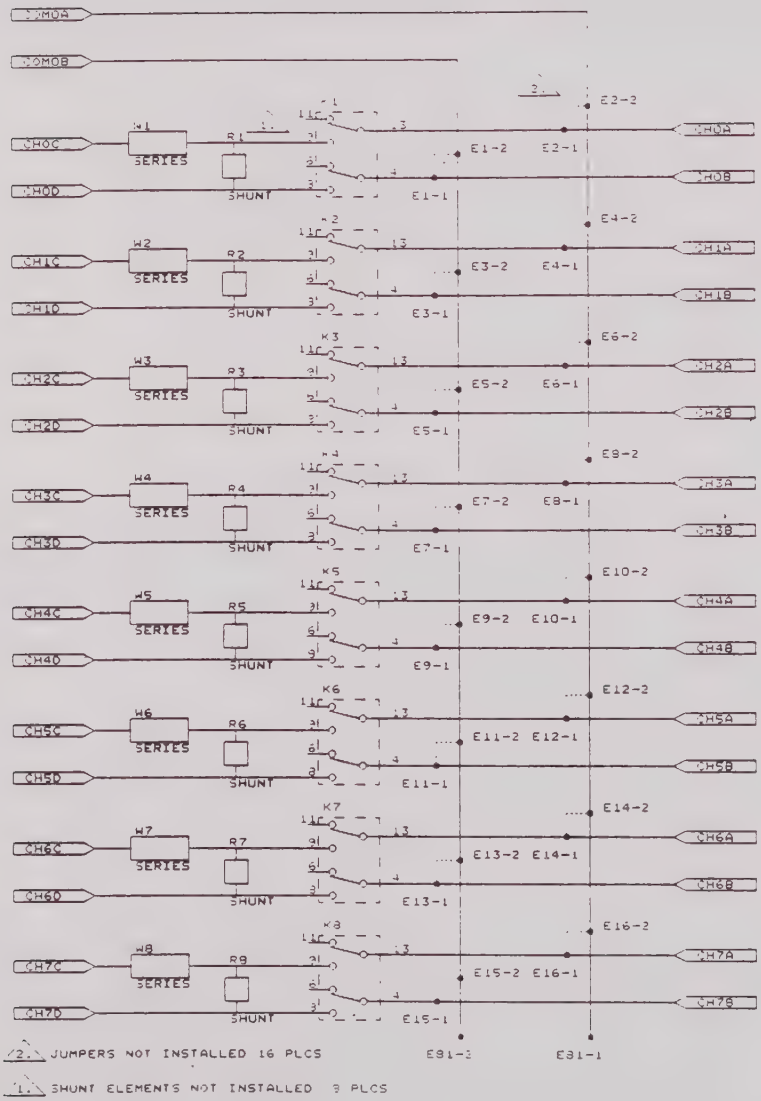

Figure 3-5, 1260-13 Jumper Locations

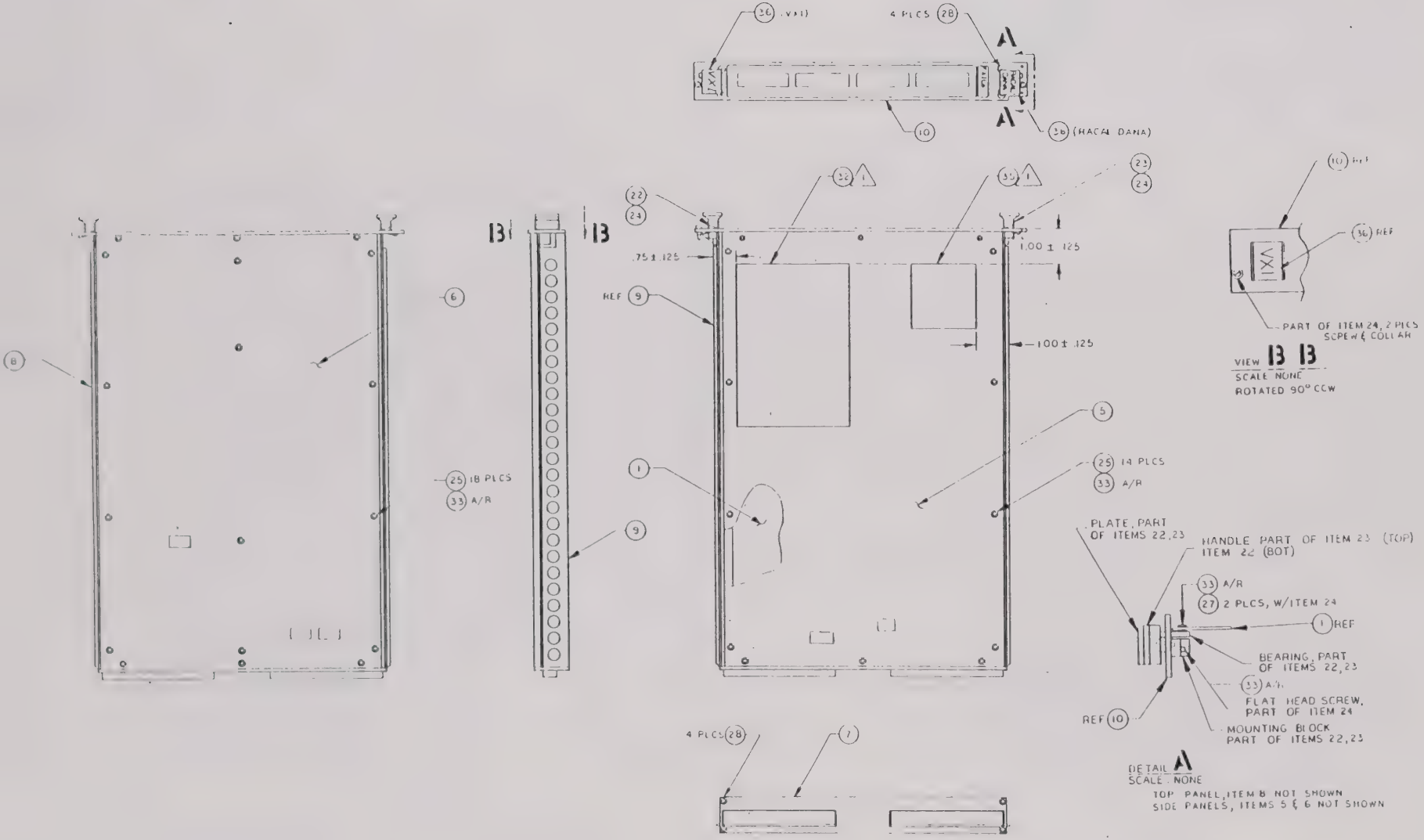

2 INCLUDE ITEM 2 (SHIPPING KIT) IN BOX WITH ASSY

⚠ LOCATE LABELS WHERE SHOWN

NOTES UNLESS OTHERWISE SPECIFIED

PROPRIETARY NOTICE
THIS DOCUMENT AND THE TECHNICAL DATA HEREIN DISCLOSED ARE PROPRIETARY TO RACAL DANA INSTRUMENTS INC AND SHALL NOT WITHOUT EXPRESS WRITTEN PERMISSION OF RACAL DANA INSTRUMENTS INC BE USED RELEASED OR DISCLOSED IN WHOLE OR IN PART OR USED TO SOLICIT QUOTATIONS FROM A COMPETITIVE SOURCE OR USED FOR MANUFACTURE BY ANYONE OTHER THAN RACAL DANA INSTRUMENTS INC THE INFORMATION HEREIN HAS BEEN DEVELOPED AT PRIVATE EXPENSE AND MAY ONLY BE USED FOR PURPOSES OF ENGINEERING EVALUATION AND FOR INCORPORATION INTO TECHNICAL SPECIFICATIONS AND OTHER DOCUMENTS WHICH SPECIFY PROCUREMENT OF PRODUCTS FROM RACAL DANA INSTRUMENTS INC

RACAL-DANA Instruments Inc.
4 GOODYEAR, IRVINE CALIFORNIA 92714

DOCUMENT TITLE: FINAL ASSY, 1260-13

SIZE	CODE IDENT NO	DOCUMENT NO	REV
D	21793	404941	A

SCALE --- SHEET 1 OF 2

1-11

COMPONENT SIDE

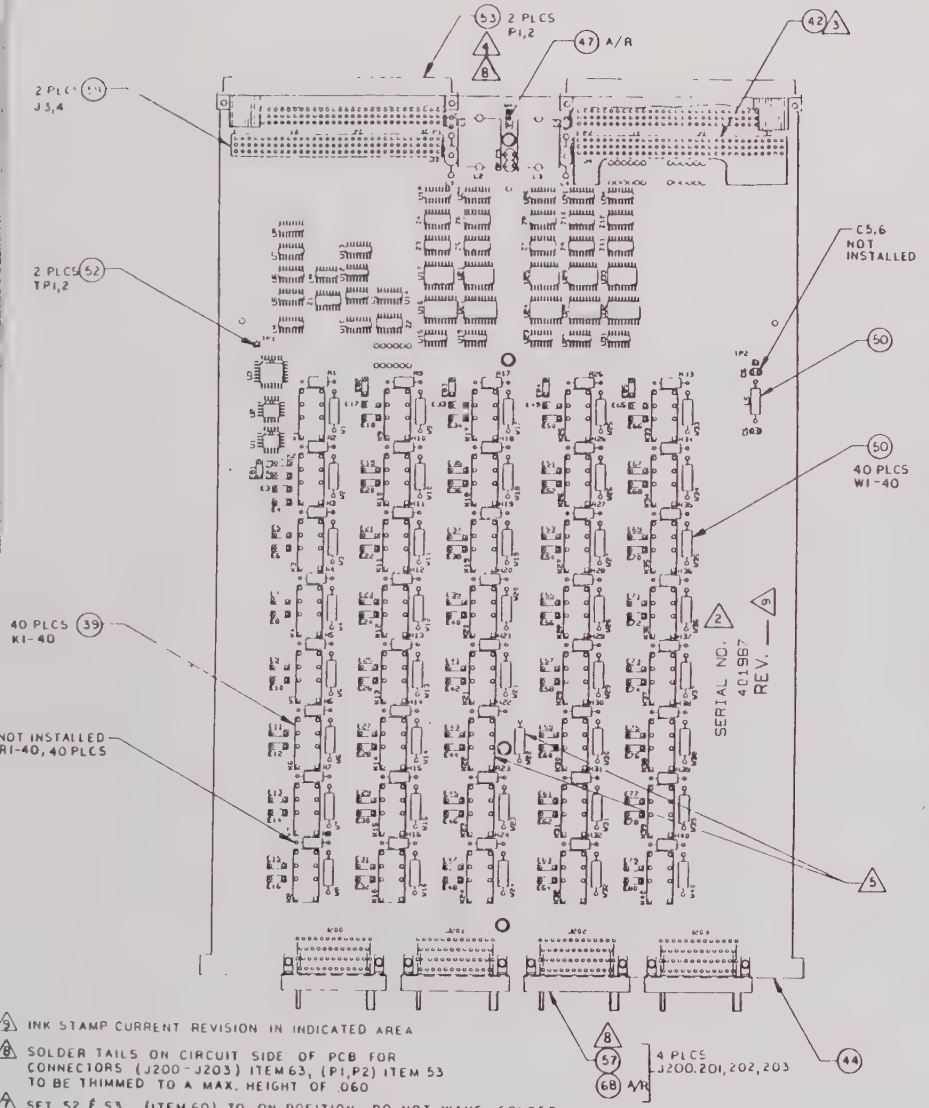

CIRCUIT SIDE

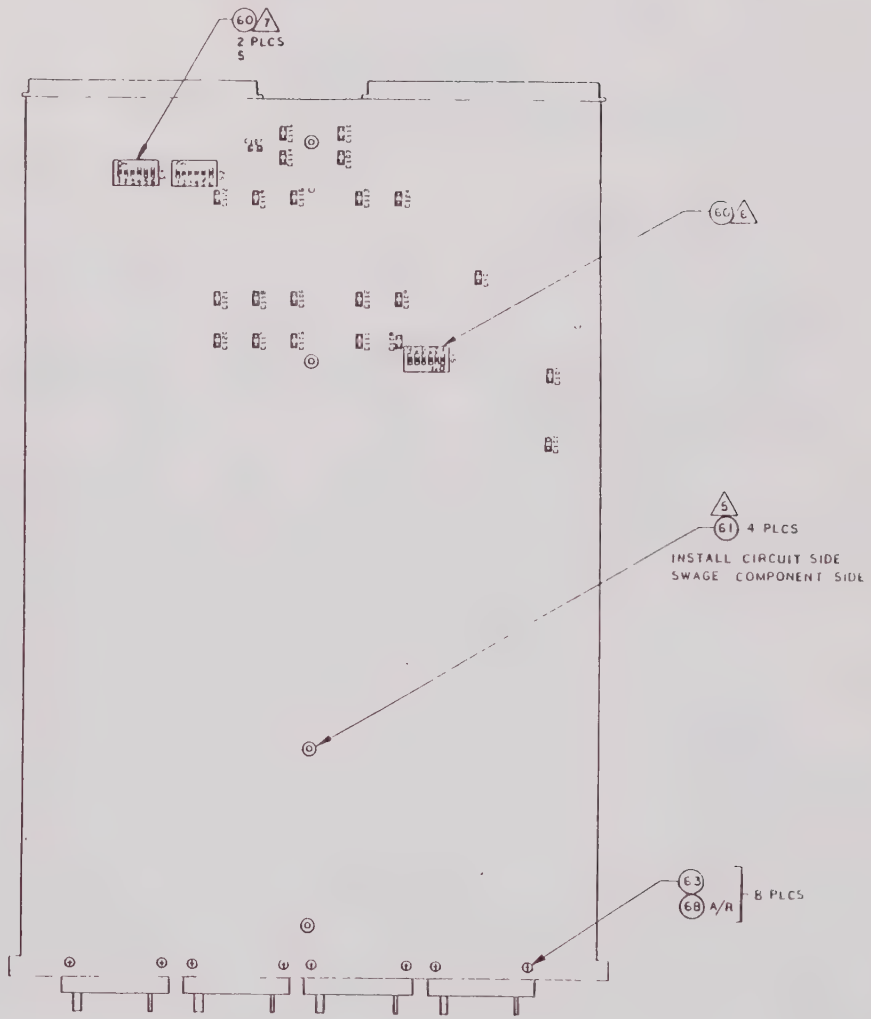

2 INK STAMP CURRENT REVISION IN INDICATED AREA

6 SOLDER TAILS ON CIRCUIT SIDE OF PCB FOR CONNECTORS (J200-J203) ITEM 63, (P1,P2) ITEM 53 TO BE TRIMMED TO A MAX. HEIGHT OF .060

7 SET S2 & S3 (ITEM 60) TO ON POSITION. DO NOT WAVE SOLDER

6 SET S1 (ITEM 60) TO LOGICAL ADDRESS 1 PER TABLE 1 DO NOT WAVE SOLDER.

3 K22 AND W22 TO BE INSTALLED AFTER INSTALLATION OF STANDOFF, ITEM 61.

4 P1 AND P2 MUST BE INSTALLED FLUSH AT RIGHT ANGLES TO PC BOARD.

5 INSTALL (ITEM 42) PCB INTO (ITEM 59) J4

2 INK STAMP SERIAL NUMBER ON COMPONENT SIDE IN INDICATED AREA.

1. REFERENCE SCHEMATIC 431987

NOTES UNLESS OTHERWISE SPECIFIED

PROPRIETARY NOTICE
THIS DOCUMENT AND THE TECHNICAL DATA HEREIN DISCLOSED ARE PROPRIETARY TO RACAL DANA INSTRUMENTS INC. AND SHALL NOT WITHOUT EXPRESS WRITTEN PERMISSION OF RACAL DANA INSTRUMENTS INC. BE USED, RELEASED OR DISCLOSED IN WHOLE OR IN PART, OR USED TO SOLICIT QUOTATIONS FROM A COMPETITIVE SOURCE OR USED FOR MANUFACTURE BY ANYONE OTHER THAN RACAL DANA INSTRUMENTS INC. THE INFORMATION HEREIN HAS BEEN DEVELOPED AT PRIVATE EXPENSE AND MAY ONLY BE USED FOR PURPOSES OF ENGINEERING EVALUATION AND FOR INCORPORATION INTO TECHNICAL SPECIFICATIONS AND OTHER DOCUMENTS WHICH SPECIFY PROCUREMENT OF PRODUCTS FROM RACAL DANA INSTRUMENTS INC.

RACAL-DANA Instruments Inc.
4 GOODYEAR, IRVINE CALIFORNIA 92714

DOCUMENT TITLE
PCB ASSY, 1260-13

SIZE	CODE IDENT NO	DOCUMENT NO	REV
D	21793	401987	A

SCALE 1:1 SHEET 1 OF 2

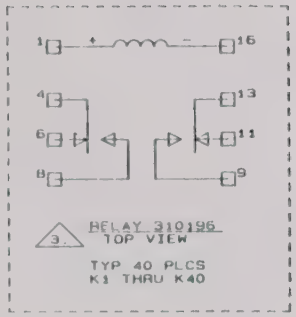

REF. DES.	IC TYPE	+5V PIN NO.	GND PIN NO.
U17, 21, 25, 29, 33	2803		9
U16, 20, 24, 28, 32	74HCT273	20	10
U14	74HCT85	16	8
U13	74LS138	16	8
U11, 12, 15, 19, 23, 27, 31	74HCT164	14	7
U10, 18, 22, 26, 30, 34	74HCT166	16	8
U9	LM339	3	12
U7, 8	26LS32	16	8
U6	26LS31	16	8
U4, 5	74HCT253	16	8
U3	231154 (22V10H)	28	14
U2	231153 (16R4)	20	10
U1	231152 (16L8Q)	20	10

IC POWER AND GROUND CONNECTIONS

HIGHEST REF. DES.
Z12
W41
U34
TP2
SW3
R40
P2
L5
K40
J203
E85
C122

4 C5, C6, R1 THRU R40 ARE NOT INSTALLED

3 RELAYS K1 THRU K40 ARE RACAL DANA P/N 310196
ALL RELAYS SHOWN IN DE-ENERGIZED POSITION.

2. RESISTOR NETWORKS ARE IN OHMS.

1. CAPACITOR VALUES ARE IN MICROFARADS, 50V, +/-20% UNLESS OTHERWISE SPECIFIED.

NOTES UNLESS OTHERWISE SPECIFIED

PROPRIETARY NOTICE
THIS DOCUMENT AND THE TECHNICAL DATA HEREON DISCLOSED ARE PROPRIETARY TO RACAL DANA INSTRUMENTS INC. AND SHALL NOT, WITHOUT EXPRESS WRITTEN PERMISSION OF RACAL DANA INSTRUMENTS INC. BE USED, RELEASED OR DISCLOSED IN WHOLE OR IN PART, OR USED TO SOLICIT QUOTATIONS FROM A COMPETITIVE SOURCE OR USED FOR MANUFACTURE BY ANYONE OTHER THAN RACAL DANA INSTRUMENTS INC. THE INFORMATION HEREON HAS BEEN DEVELOPED AT PRIVATE EXPENSE AND MAY ONLY BE USED FOR PURPOSES OF ENGINEERING EVALUATION AND FOR INCORPORATION INTO TECHNICAL SPECIFICATIONS AND OTHER DOCUMENTS WHICH SPECIFY PROCUREMENT OF PRODUCTS FROM RACAL DANA INSTRUMENTS INC.

RACAL-DANA Instruments Inc.
4 GOODYEAR, IRVINE, CALIFORNIA 92714

DOCUMENT TITLE
SCHEM, 1260-13

SIZE	CODE IDENT NO	DOCUMENT NO	REV
B	21793	431987	A

SCALE | SHEET 1 OF 14

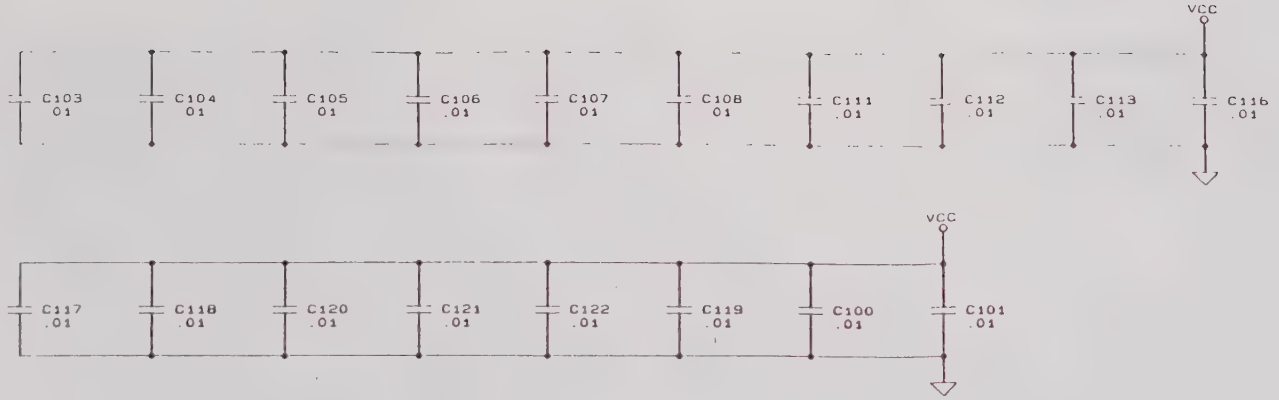

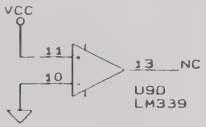

SIZE	CODE IDENT NO	DOCUMENT NO	REV
B	21793	431987	A
SCALE		SHEET 2 OF 14	

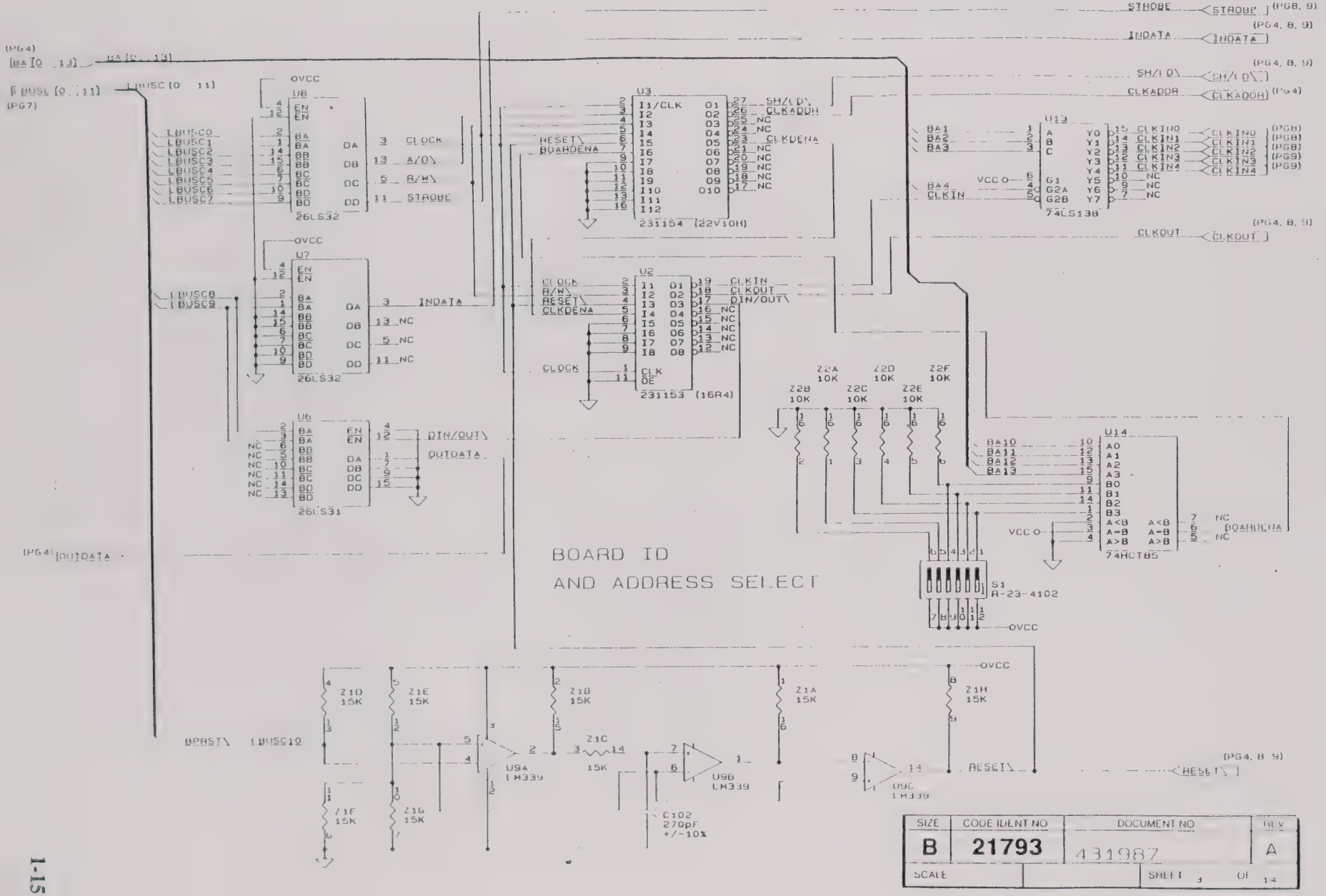
BOARD ID
AND ADDRESS SELECT
U8
26LS32
U7
26LS32
U6
26LS31
U3
231154 (22V10H)
U2
231153 (16R4)
U13
74LS138
U14
74HCT85
S1
R-23-4102
U9A
LM339
U9B
LM339
U9C
LM339
C102
270pF
+/-10%
STROBE
INDATA
SH/LD\
CLKADDR
CLKOUT
CLOCK
A/D\
R/W\
DIN/OUT\
OUTDATA
RESET\
BOARDENA
CLKDENA
CLKIN
BPRST\
LBUSC10
OVCC
VCC
SIZE
B
CODE IDENT NO
21793
DOCUMENT NO
431987
REV
A
SCALE
SHEET 3 OF 14

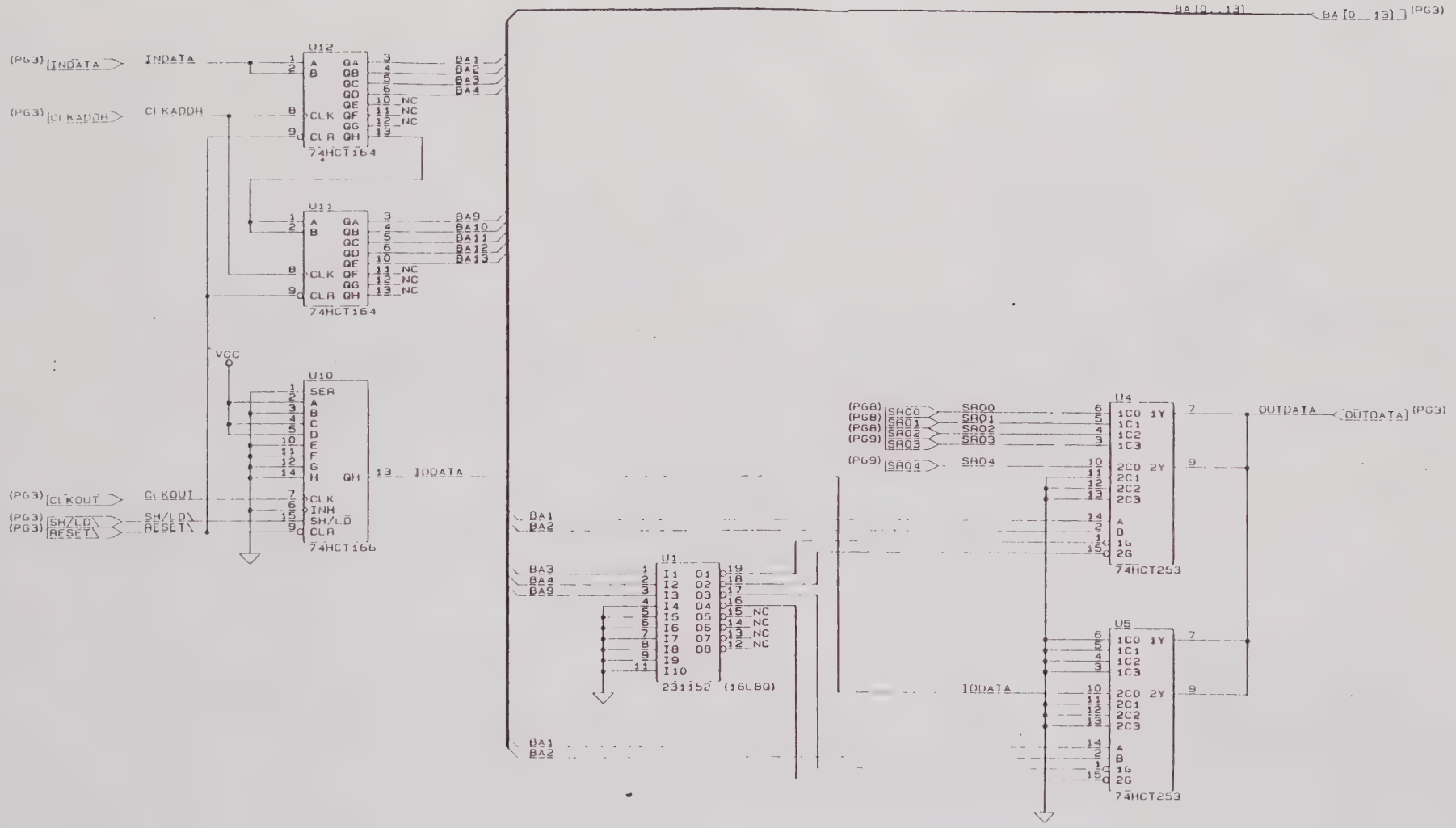

SIZE	CODE IDENT NO	DOCUMENT NO	REV
B	21793	131987	A
SCALE		SHEET 4 OF 14	

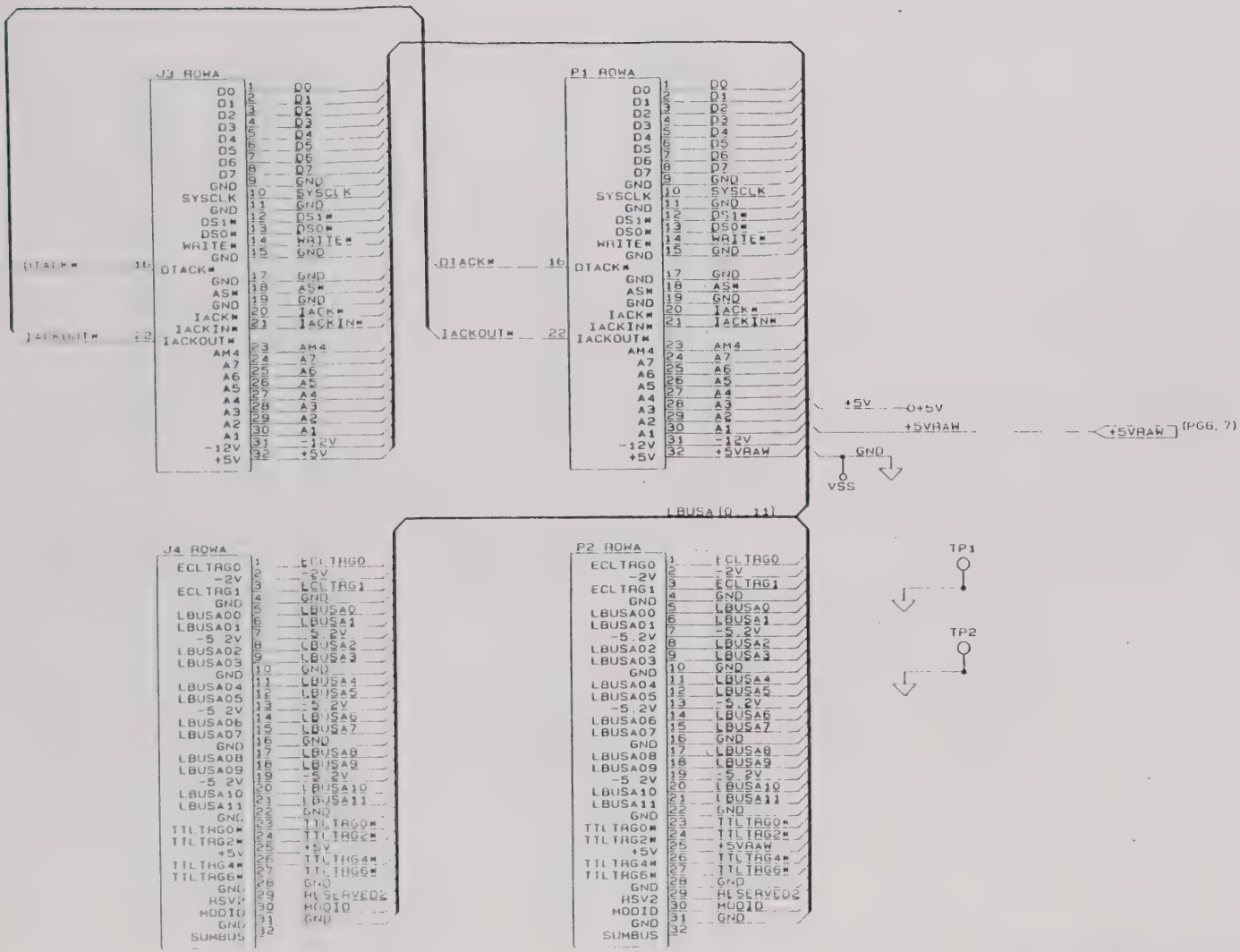

SIZE	CODE IDENT NO	DOCUMENT NO	REV
B	21793	131983	A
SCALE		SHEET 5 OF 14	

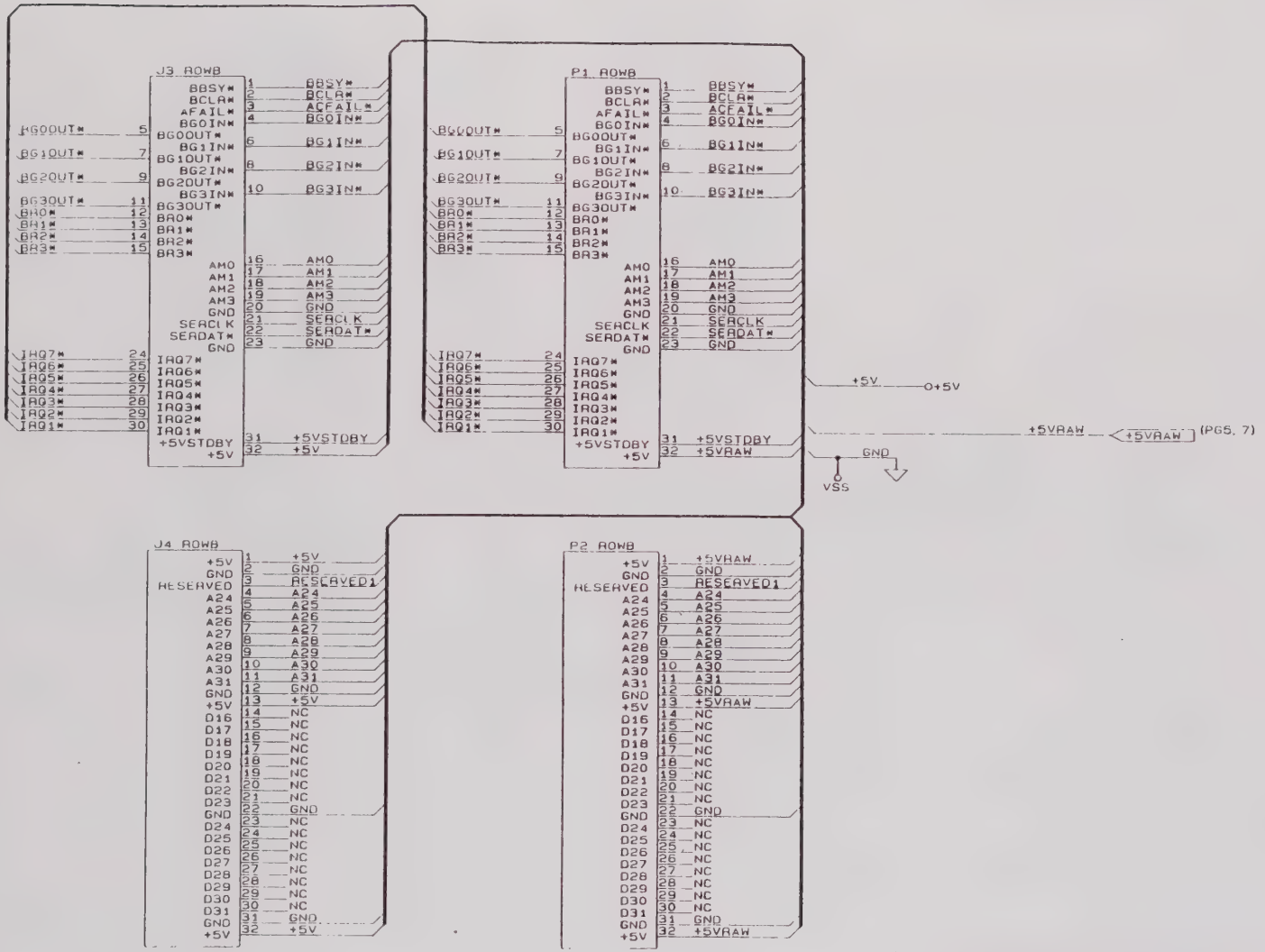

SIZE	CODE IDENT NO	DOCUMENT NO	REV
B	21793	431987	A
SCALE		SHEET 6 OF 14	

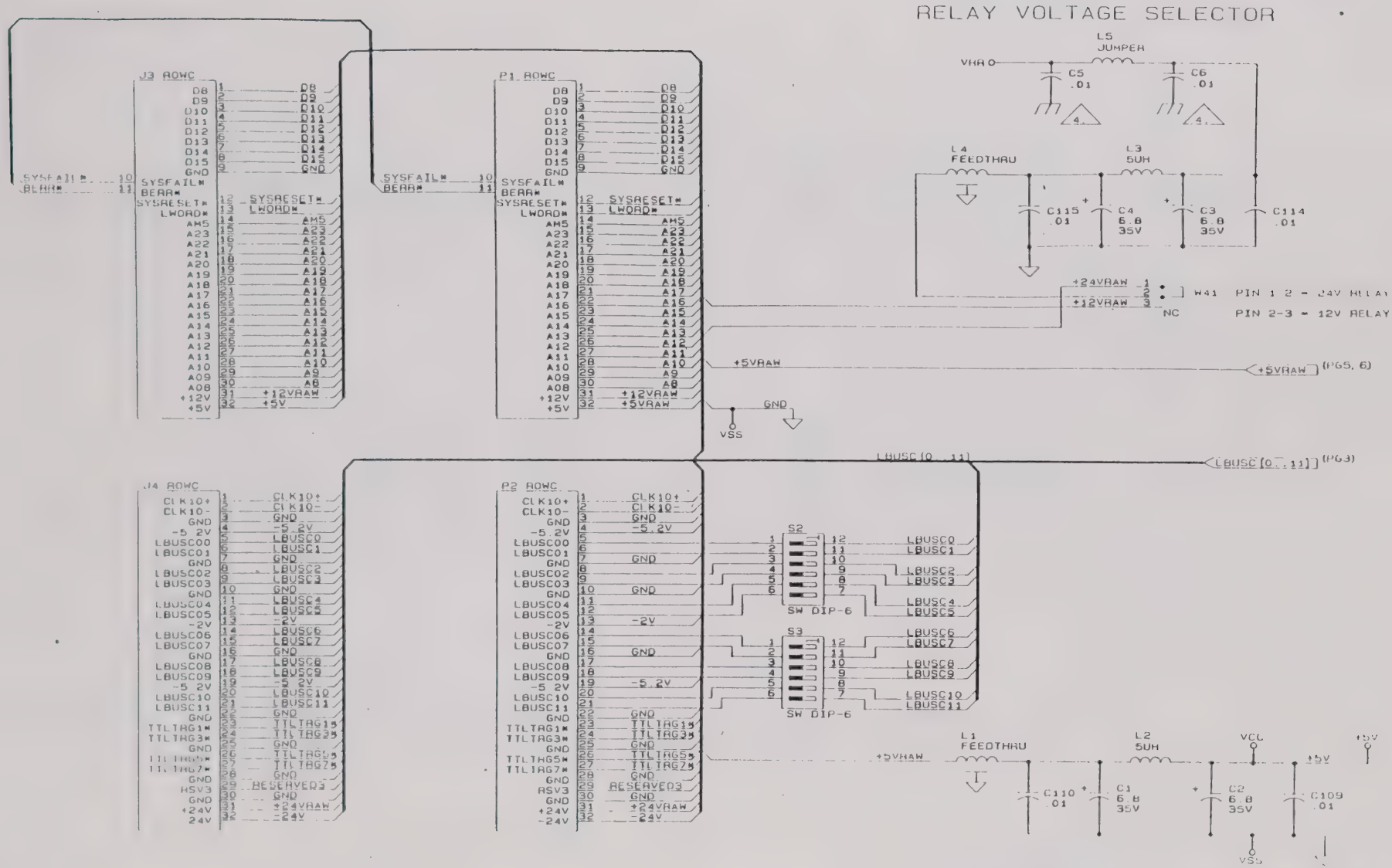

SIZE	CODE IDENT NO	DOCUMENT NO	REV
B	21793	431987	A
SCALE		SHEET / OF 14	

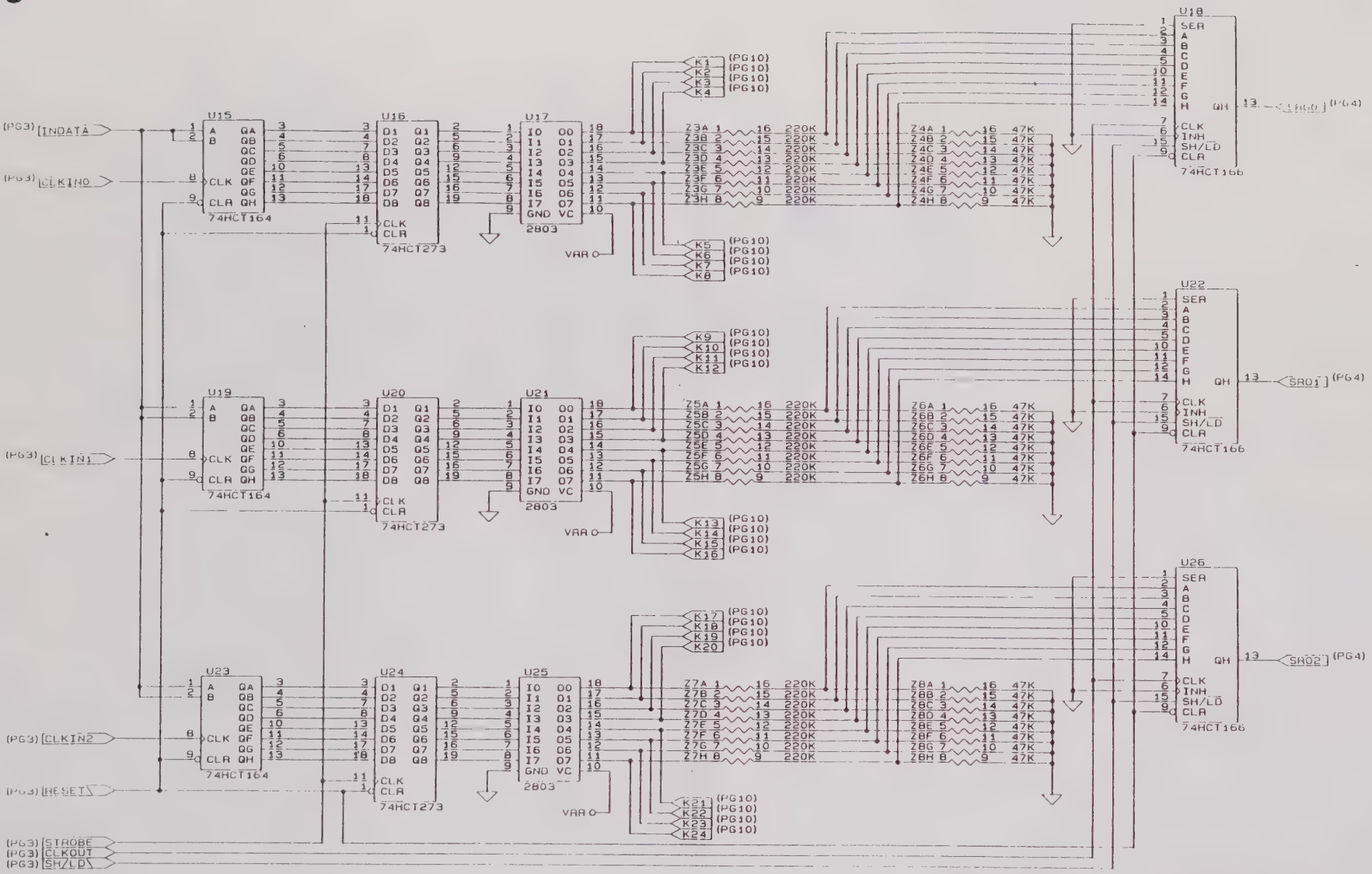

SIZE	CODE IDENT NO	DOCUMENT NO	REV
B	21793	431987	A
SCALE - - - -		SHEET 8 OF 14	

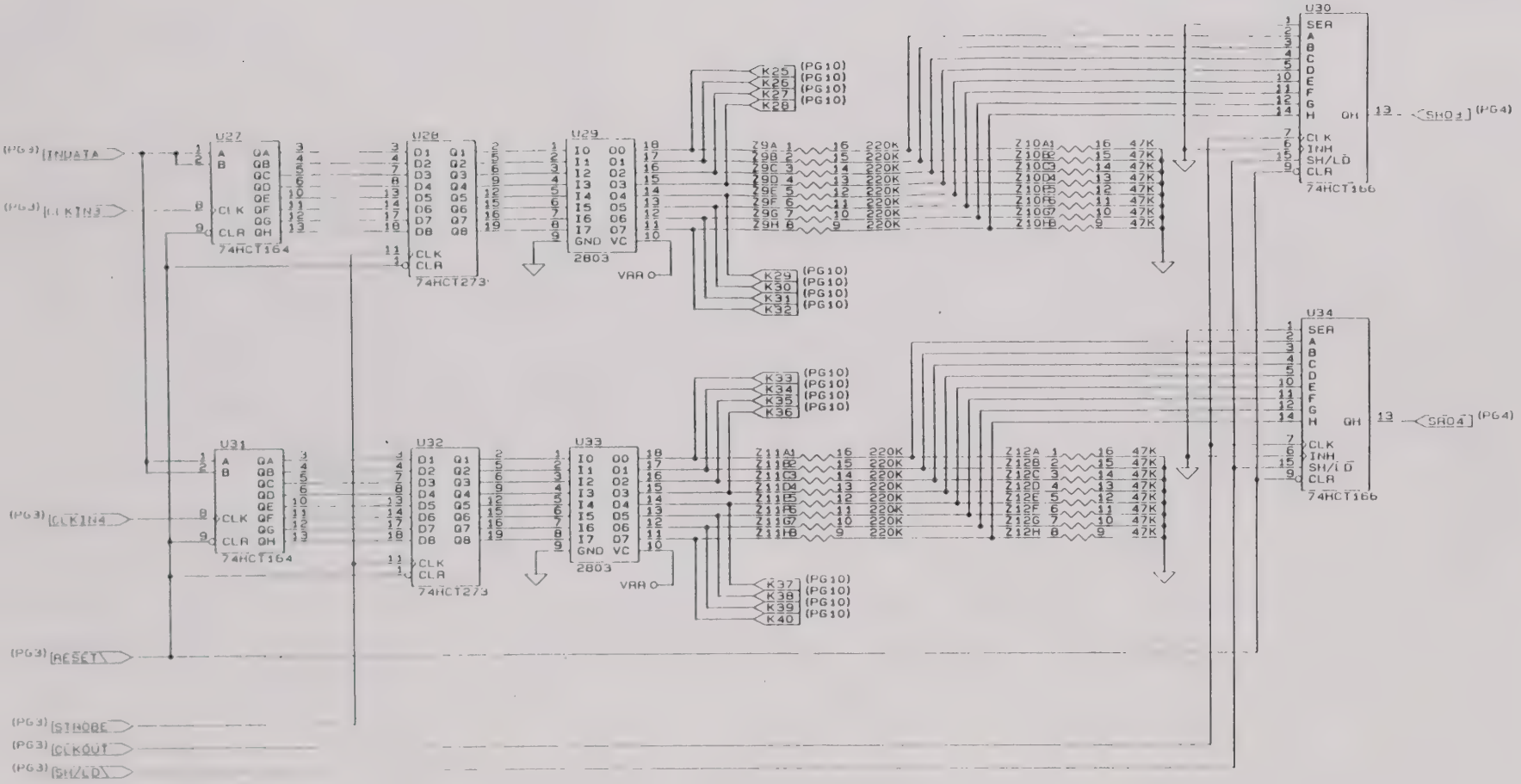

SIZE	CODE IDENT NO	DOCUMENT NO	REV
B	21793	1 1 1 9 8 3 /	A
SCALE		SHEET 9 OF 14	

SIZE	CODE IDENT NO	DOCUMENT NO	REV
B	21793	431987	A
SCALE		SHEET 10 OF 14	

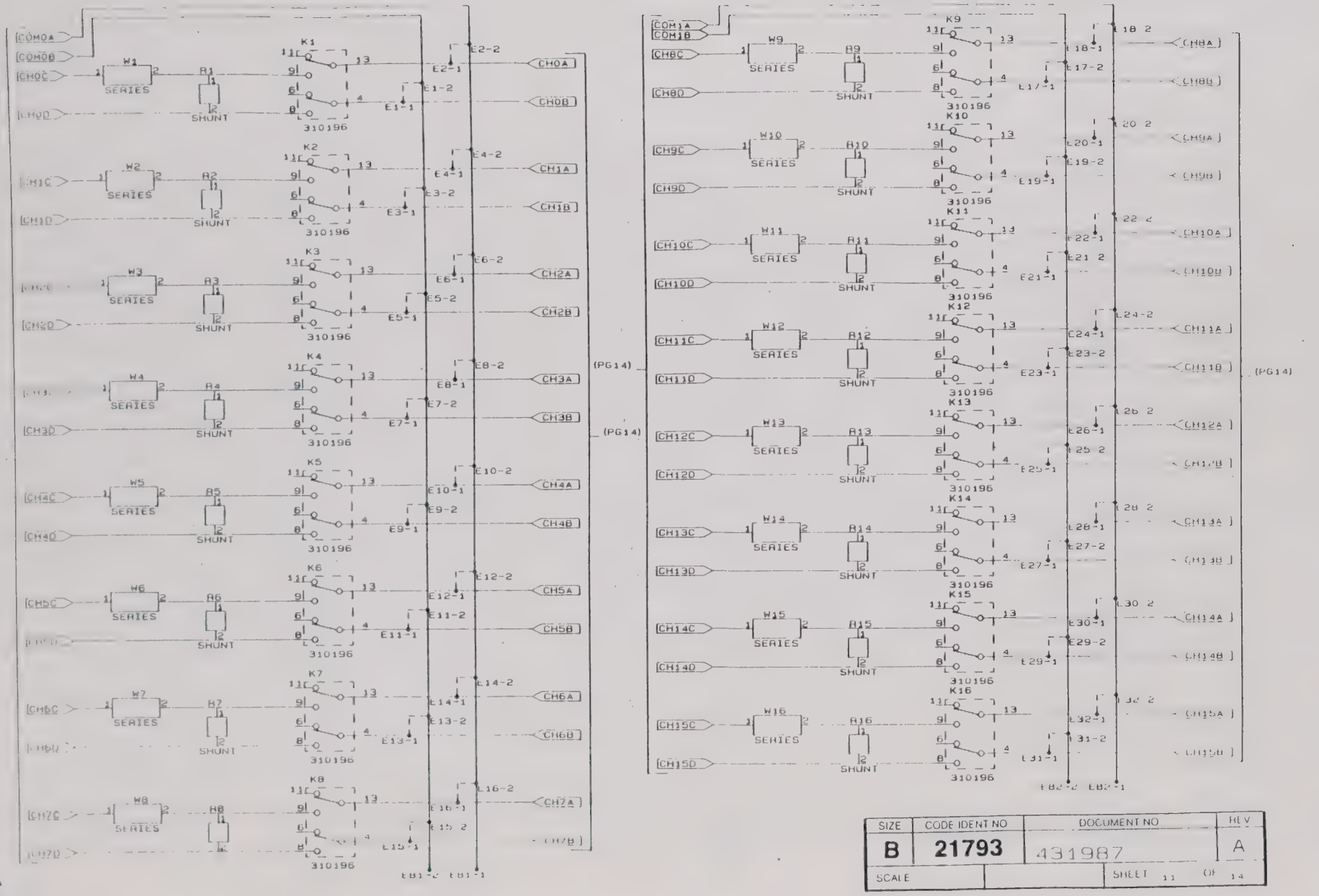

SIZE	CODE IDENT NO	DOCUMENT NO	REV
B	21793	431987	A
SCALE		SHEET 11 OF 14	

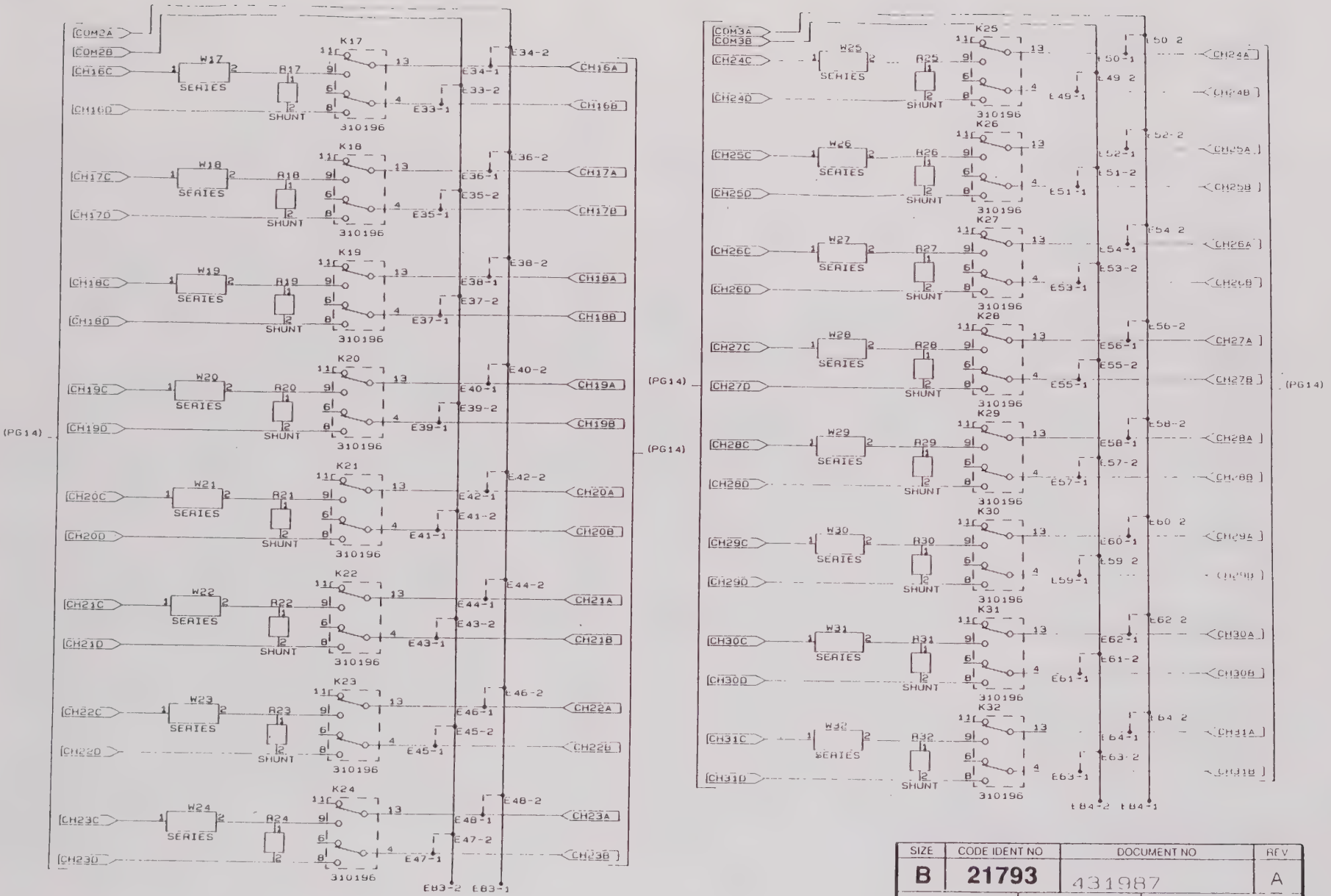

SIZE	CODE IDENT NO	DOCUMENT NO	REV
B	21793	431987	A
SCALE		SHEET 12 OF 14	

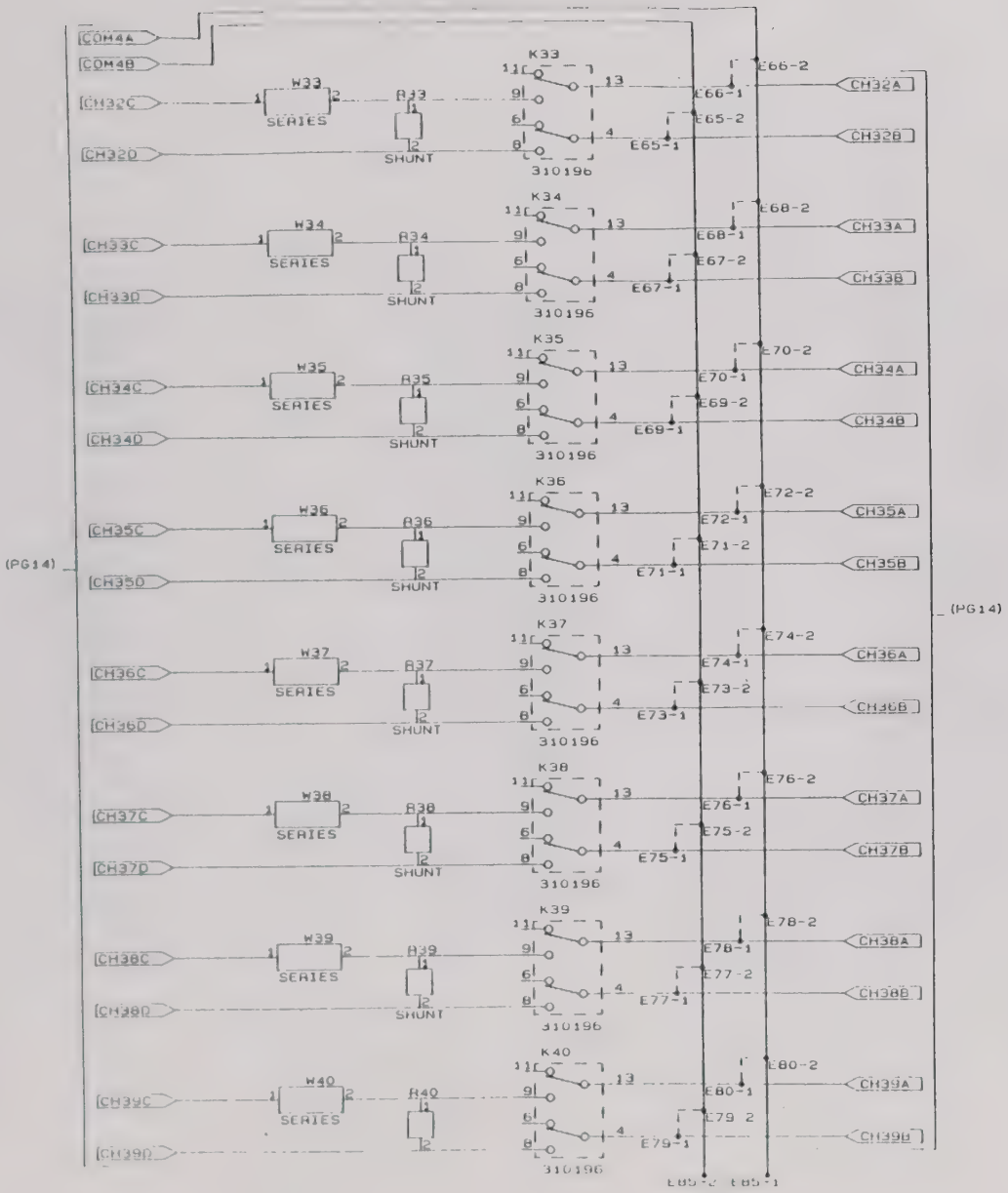

SIZE	CODE IDENT NO	DOCUMENT NO	REV
B	21793	431987	A
SCALE		SHEET 13 OF 14	

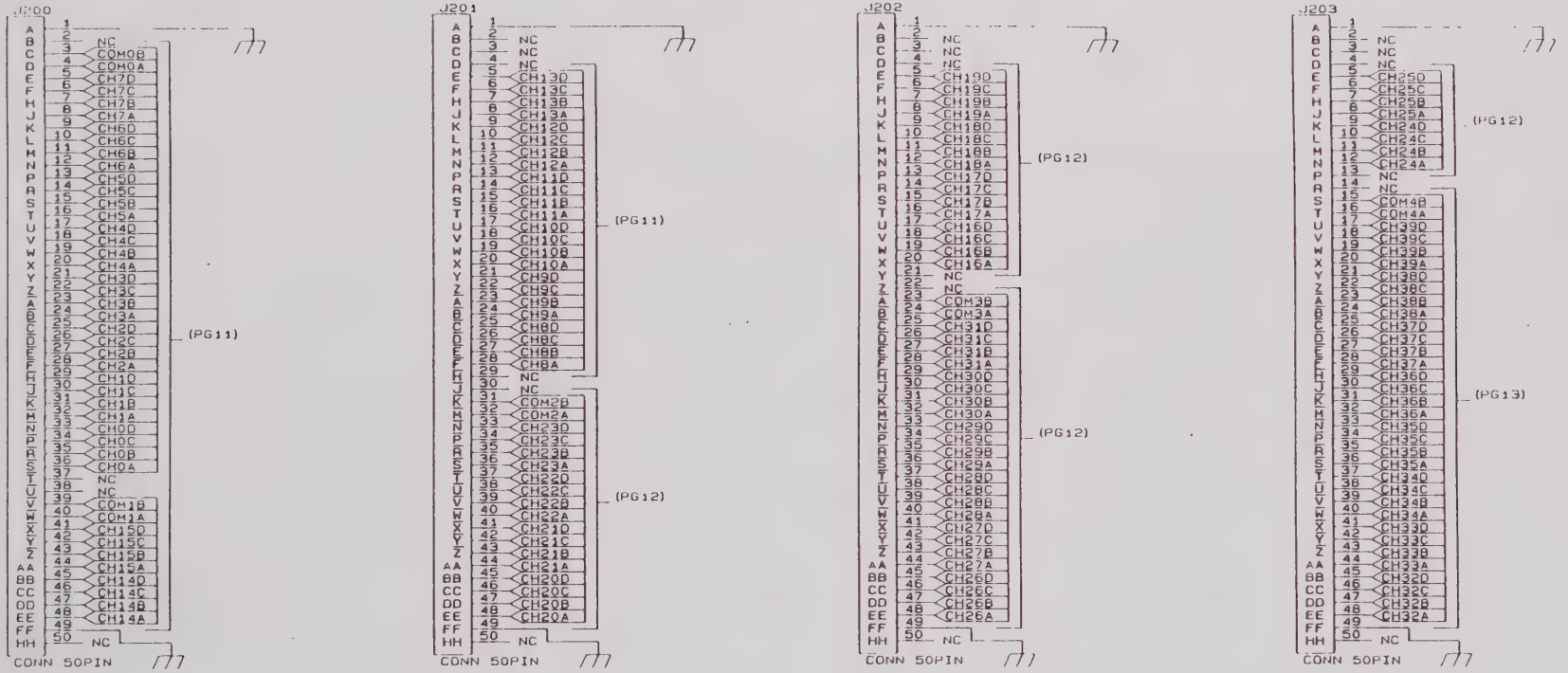

SIZE	CODE IDENT NO	DOCUMENT NO	REV
B	21793	431987	A
SCALE		SHEET 14 OF 14	

404941 FINAL ASSY., 1260-13

REF DESIG	RACAL-DANA P/N	DESCRIPTION	FSC	MANUFACTURER'S P/N
{1}1	401987	PCB ASSY., 1260-13 (UNLOADED)	21793	401987
{3}1	404942	SHIPPING KIT, 1260-13	21793	404942
{5}1	455901	PANEL, RIGHT SIDE	21793	455901
{6}1	455779-003	PANEL, SIDE, LEFT	21793	455779-003
{7}1	455781	PANEL, REAR, SINGLE	21793	455781
{8}1	455784-001	PANEL, VXI TOP	21793	455784-001
{9}1	455784-002	PANEL, VXI BOTTOM	21793	455784-002
{10}1	455795	PANEL, FRONT, 1260-13	21793	455795
{22}1	611264	HANDLE, EXTRACTOR, BOTTOM	62559	20817-327
{23}1	611265	HANDLE, EXTRACTOR, TOP	62559	20817-328
{24}0.5	611266	MOUNTING HARDWARE, HANDLE	62559	21100-745
{25}32	615539	SCREW, PFH, 4-40X, 125	-	-
{27}2	616405	SCREW, PFH, M2.5-.45 X 12	-	-
{28}8	616480	SCREW, PFH, 4-40 X .375	-	-
{32}1	921212-008	LABEL, VXI, 1260-13	21793	921212-008
{33}A/R	920962	LOCTITE, 242, MED STR.	05972	272
{35}1	921059	LABEL, CAUTION, STATIC	21793	921059
{36}1	921148	LABEL SET, VXI-VME	21793	921148

404942 SHIPPING KIT, 1260-13

REF DESIG	RACAL-DANA P/N	DESCRIPTION	FSC	MANUFACTURER'S P/N
{1}2	455540	KEY, LOCKOUT, TTL, A/C	21793	455540
{2}2	455541	KEY, LOCKOUT, TTL, A/C	21793	455541
{3}2	455542	KEY, LOCKOUT, TTL, A/C	21793	455542
{6}4	601855-050	CONNECTOR, SGMC, CABLE PLUG	21793	601855-050
{7}200	601857	CONTACT, SGMC, MALE	28198	M5422N
{9}3	615013	SCREW, PPH, 2-56 X .188	-	-

401987 PCB ASSY., 1260-13

REF DESIG	RACAL-DANA P/N	DESCRIPTION	FSC	MANUFACTURER'S P/N
C1-C4	110126	CAP, TANTA, 6.8UF, 35V, 20 PERCENT	05397	T355F685M035A5
C100	R-21-1801	CAP, CHIP, 10 NF	95275	VJ1206Y103MF
C101	R-21-1801	CAP, CHIP, 10 NF	95275	VJ1206Y103MF
C102	130177	CAPACITOR, CHIP, SMD, 270PF	95275	VJ1206A271KXAMT
C103-C122	R-21-1801	CAP, CHIP, 10 NF	95275	VJ1206Y103MF
J3	601925	CONNECTOR, PCB, RECEPT, 3 ROW, 96P	52072	618008
J4	601925	CONNECTOR, PCB, RECEPT, 3 ROW, 96P	52072	618008
J200	601856-050	CONNECTOR, SMPL, PCB RECEPT	21793	601856-050
J201	601856-050	CONNECTOR, SMPL, PCB RECEPT	21793	601856-050
J202	601856-050	CONNECTOR, SMPL, PCB RECEPT	21793	601856-050
J203	601856-050	CONNECTOR, SMPL, PCB RECEPT	21793	601856-050
K1-K40	310196	RELAY, 2FORM C	61529	DS2YE-S-DC24V
L1	100164	CAP, FEED-THRU,800PF, 50V	00779	842448-2
L2	310193	CHOKE, SHIELDED, 5UH	91637	IH-5-5-10
L3	310193	CHOKE, SHIELDED, 5UH	91637	IH-5-5-10
L4	100164	CAP, FEED-THRU,800PF, 50V	00779	842448-2
L5	600245	JUMPER, INSULATED	52210	L-2007-1
P1	601675	CONNECTOR, EUROCARD TYPE C, 96-PIN	00779	532505-1
P2	601675	CONNECTOR, EUROCARD TYPE C, 96-PIN	00779	532505-1
S1-S3	601969	SWITCH, DIP 6 POS, LOW PROFILE	65832	K406S
TP1	601197	POST, TEST, .025 SQ	00779	6-87022-6
TP2	601197	POST, TEST, .025 SQ	00779	6-87022-6
U1	231152	IC, PROGRAMMED PIA	21793	231152
U2	231153	IC, PROGRAMMED PLA	21793	231153
U3	231154	IC, PROGRAMMED PLA	21793	231154
U4	231147	IC, MULTIPLEXER	04713	74HC253D
U5	231147	IC, MULTIPLEXER	04713	74HC253D
U6	231125	IC, DIGITAL, LINE DRIVER	27014	DS26LS31MN
U7	231096	IC, QUAD DIFF RECEIVER	01295	AM26LS32ACD
U8	231096	IC, QUAD DIFF RECEIVER	01295	AM26LS32ACD
U9	231093	IC, QUAD COMPARATOR	04713	LM339D
U10	231120	IC, 8-BIT, PARALLEL/SERIAL OUT S.R.	18324	74HCT166D
U11	231131	IC, DIGITAL, SHIFT REGISTER	18324	PC74HCT164D
U12	231131	IC, DIGITAL, SHIFT REGISTER	18324	PC74HCT164D
U13	231094	IC, DEMUX DECODER	18324	N74LS138D
U14	231135	IC, DIGITAL, 4-BIT COMPARATOR	18324	PC74HCT85D
U15	231131	IC, DIGITAL, SHIFT REGISTER	18324	PC74HCT164D
U16	231130	IC, DIGITAL, FLIP FLOP	18324	PC74HC273
U17	231098	IC, SOIC TRANSISTOR	56289	ULN-2803LW
U18	231120	IC, 8-BIT, PARALLEL/SERIAL OUT S.R.	18324	74HCT166D
U19	231131	IC, DIGITAL, SHIFT REGISTER	18324	PC74HCT164D
U20	231130	IC, DIGITAL, FLIP FLOP	18324	PC74HC273
U21	231098	IC, SOIC TRANSISTOR	56289	ULN-2803LW
U22	231120	IC, 8-BIT, PARALLEL/SERIAL OUT S.R.	18324	74HCT166D
U23	231131	IC, DIGITAL, SHIFT REGISTER	18324	PC74HCT164D
U24	231130	IC, DIGITAL, FLIP FLOP	18324	PC74HC273
U25	231098	IC, SOIC TRANSISTOR	56289	ULN-2803LW
U26	231120	IC, 8-BIT, PARALLEL/SERIAL OUT S.R.	18324	74HCT166D
U27	231131	IC, DIGITAL, SHIFT REGISTER	18324	PC74HCT164D
U28	231130	IC, DIGITAL, FLIP FLOP	18324	PC74HC273
U29	231098	IC, SOIC TRANSISTOR	56289	ULN-2803LW
U30	231120	IC, 8-BIT, PARALLEL/SERIAL OUT S.R.	18324	74HCT166D
U31	231131	IC, DIGITAL, SHIFT REGISTER	18324	PC74HCT164D
U32	231130	IC, DIGITAL, FLIP FLOP	18324	PC74HC273
U33	231098	IC, SOIC TRANSISTOR	56289	ULN-2803LW
U34	231120	IC, 8-BIT, PARALLEL/SERIAL OUT S.R.	18324	74HCT166D
W1-W40	600245	JUMPER, INSULATED	52210	L-2007-1
Z1	080114	RES NETWORK, 16P8R, 15K	73138	628-AL-153J
Z2	080120	RES NETWORK, 10K	11236	767-161R10K

401987 PCB ASSY., 1260-13

REF DESIG	RACAL-DANA P/N	DESCRIPTION	FSC	MANUFACTURER'S P/N
Z3	080119	RES NETWORK, 220K	91637	SOMC-1603-224K
Z4	080117	RES NETWORK, 16P8R, 47K	73138	628-AL-473J
Z5	080119	RES NETWORK, 220K	91637	SOMC-1603-224K
Z6	080117	RES NETWORK, 16P8R, 47K	73138	628-AL-473J
Z7	080119	RES NETWORK, 220K	91637	SOMC-1603-224K
Z8	080117	RES NETWORK, 16P8R, 47K	73138	628-AL-473J
Z9	080119	RES NETWORK, 220K	91637	SOMC-1603-224K
Z10	080117	RES NETWORK, 16P8R, 47K	73138	628-AL-473J
Z11	080119	RES NETWORK, 220K	91637	SOMC-1603-224K
Z12	080117	RES NETWORK, 16P8R, 47K	73138	628-AL-473J
{42}1	401951	PCB ASSY., LBUS JUMPER	21793	401951
{44}1	411987	PCB 1260-13 (UNLOADED)	21793	411987
{47}A/R	500022	WIRE, BARE COPPER/TIN, 22 GA	21793	500022
{61}4	611258-001	STANDOFF, SWAGE 4-40 X .170	06540	8091-11B-B-440-28
{63}8	615012	SCREW, PPH, 2-56 X .125	-	-
{68}A/R	920962	LOCTITE, 242, MED STR.	05972	272

List of Suppliers

FSC	SUPPLIER
00779	AMP INC. HARRISBURG, PA
01295	TEXAS INSTRUMENTS INC. DALLAS, TX
01526	GENICOM CORP. WAYNESBORO, VA
02735	RCA (SOLID STATE DIV.) SOMERVILLE, NEW JERSEY
03508	GENERAL ELECTRIC CO. (SEMI-CONDUCTOR PRODUCTS) AUBURN, NY
04713	MOTOROLA INC. (SEMICONDUCTOR PRODUCTS DIV) PHOENIX, AZ
05397	UNION CARBIDE CORP (MATERIALS SYSTEMS DIV) CLEVELAND, OHIO
05972	LOCTITE CORP HARTFORD, CONN
06383	PANDUIT CORP TINLEY PARK, CA
06540	AMATOM ELECTRONIC HARDWARE NEW ROCHELLE, NY
06776	ROBINSON NUGENT INC. NEW ALBANY, IN
07263	FAIRCHILD (SEMICONDUCTOR DIV.) MOUNTAIN VIEW, CA
08261	SPECTRA-STRIP CORP GARDEN GROVE, CA
11236	CTS OF BERNE INC. BERNE, INDIANA
16956	DENNISON MFG. CO. FRAMINGTON, MA
18324	SIGNETICS INC. SUNNYVALE, CA
21793	RACAL-DANA INSTRUMENTS INC. IRVINE, CA
22526	DUPONT CONNECTOR CO. NEW CUMBERLAND, PA
27014	NATIONAL SEMI-CONDUCTOR CORP. SANTA CLARA, CA
29005	STORM PRODUCTS CO. LOS ANGELES, CA
34359	THREE (3) M CO. (COMMERCIAL TAPE DIV.) ST. PAUL, MN
52072	CIRCUIT ASSY. CORP. COSTA MESA, CA
52210	GETTING ENGRG & MFG. CO. SPRING MILLS, PA
53387	THREE (3) M CO. ST. PAUL, MN
55322	SAMTEC, INC. NEW ALBANY, IN
56289	SPAGUE ELECTRIC CO. N. ADAMS, MA
61529	AROMAT CORP. CUPERTINO, CA
62559	SCHROFF, INC. WARWICK, RI
65832	AMERICAN RESEARCH ENGRG ELGIN, IL
70903	BELDEN CORP. CHICAGO, IL
73138	BECKMAN INSTRUMENTS FULLERTON, CA
73445	AMPEREX ELECTRONIC CORP. HICKSVILLE, NY
78189	ILLINOIS TOOL WORKS, INC. (SHAKEPROOF, DIV.) ELGIN, IL
81349	MILITARY SPECIFICATION
86928	SEASTROM MFG CO. INC. GLENDALE, CA
91637	DALE ELECTRONICS INC. COLUMBUS, NEBRASKA
92194	ALPHA WIRE ELIZABETH, NEW JERSEY
95275	VITRAMON, INC. BRIDGEPORT, CONNECTICUT
98291	SEALECTRO CORP. MAMARONECK, NY

1260-14 DIGITAL I/O MODULE

1260 VXI
SWITCHING CARD

RACAL-DANA

RACAL-DANA INSTRUMENTS INC.

4 Goodyear Street, P.O. Box C-19541, Irvine, CA 92713
Telephone: 714/859-8999, Fax: 714/859-2505

RACAL INSTRUMENTS, LTD.

480 Bath Road, Slough, Berkshire, SL1 6BE, England
Telephone: 44-628 604455, Fax: 44-628 662017

RACAL SYSTEMS ELECTRONIQUE S.A.

18 Avenue Dutartre, 78150 Le Chesnay, France
Telephone: 33-1-3-955-8888, Fax: 33-1-3-955-6735

RACAL ELEKTRONIK SYSTEMS GmbH

Frankenforster Strasse 21, D-5060 Bergisch-Gladbach 1, Federal Republic of Germany
Telephone: 49-22-04-60081, Fax: 49-22-04-21491

RACAL SYSTEMS ELETTRONICA

Via Roma, 108/PAL, E1, 20060 Cassina de Pecchi, Milan, Italy
Telephone: 39-2-9514717/737/770, Fax: 39-2-9514522

PUBLICATION DATE: APRIL 1992

Copyright ©1992 by Racal-Dana Instruments Inc. Printed in the United States of America. All rights reserved.
This book or parts thereof may not be reproduced in any form without written permission of the publishers.

TABLE OF CONTENTS

1260-14 DIGITAL I/O MODULE

1.0	1260-14 Module Specification	1-1
2.0	Installation Instructions	1-3
2.1	Unpacking and Inspection	1-3
2.2	Reshipment Instructions	1-3
2.3	Option 01 Installation	1-3
2.4	Module Installation	1-3
3.0	1260-14 Module Specific Syntax	1-4
3.1	Syntax	1-4
3.2	1260-14 Pin Configuration	1-11
3.3	1260-14 Operating Modes	1-17
4.0	Drawings	1-19
5.0	Parts List	1-38

TABLES

3-1	1260-14 Channels and Ports	1-11
3-2	1260-14 Pins, Signals and Descriptions	1-13

FIGURES

1-1	1260-14 Block Diagram	1-1
3-1	1260-14 Front Panel and Pin Configuration	1-12
3-2	1260-14 Tri-State Control	1-17
3-3	1260-14 Input and Output Handshake Modes	1-18

1.0 1260-14 Module Specification

The 1260-14 provides 96 TTL compatible digital I/O lines in 12 groups of 8 bits each. Each port of 8 bits can be individually controlled in the asynchronous mode, or be synchronous with other ports. Data appears at the outputs on a port-by-port basis.

Two handshake lines are available for the synchronous I/O mode of operation at a transfer rate of up to 1 kHz. The polarity of these lines is programmable to provide a flexible interface with user handshake signals.

Tri-state output control is provided for each port, under either software or hardware control.

The module is programmable in several operating modes, and data may be manipulated in either Hex, Decimal or Binary. Memory is available on the Option 01 Smart Card to allow buffered I/O operations.

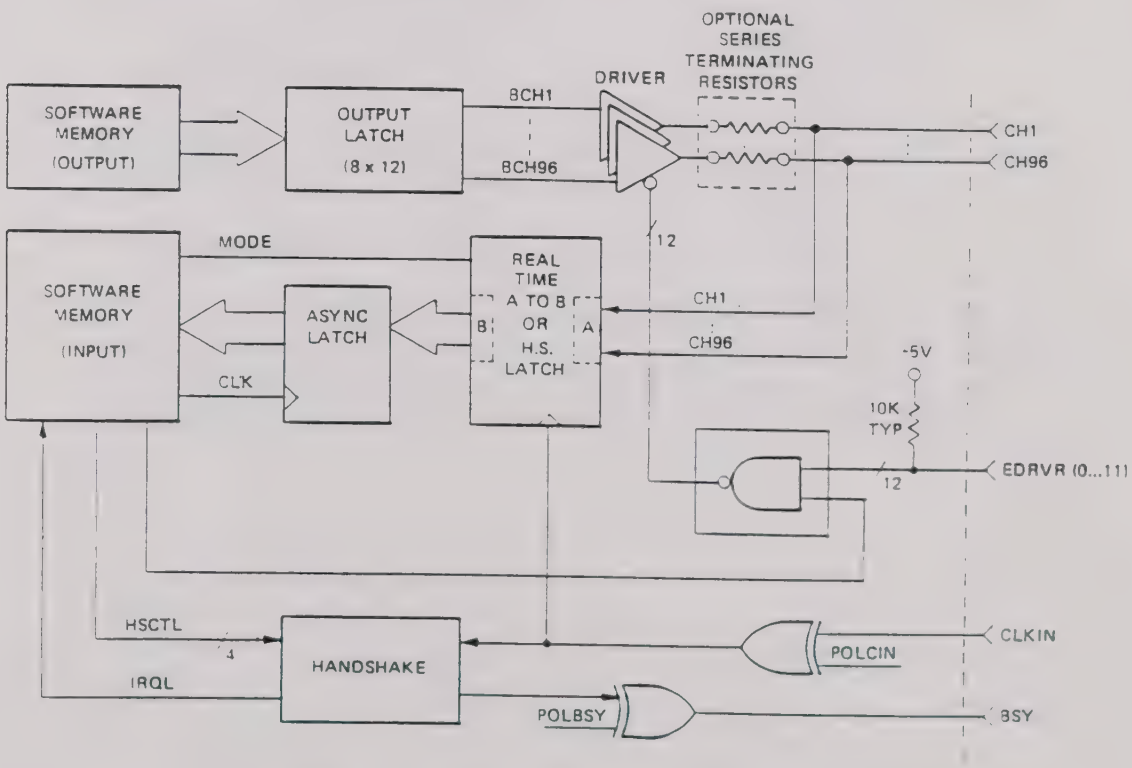

Figure 1-1, 1260-14 Block Diagram

Specifications

User Connector	Two 50 pin IDC and two 60 pin IDC
Number of I/O Channels	96
Configuration	I/O lines selected as either input or output on an 8-bit byte basis
Data Rate	Static to approximately 1 kHz
Operating Modes	Asynchronous Synchronous Mixed Synchronous and Asynchronous
Input / Output	TTL compatible *
Output	
V_{out} (High):	≥ 2.4 V at -3 mA output
V_{out} (Low):	≤ 0.5 V at 48 mA output
Input	
V_{in} (High):	≥ 2.0 V
V_{in} (Low):	≤ 0.8 V
V_{ih} (Max):	5.25 VDC
Minimum Option 01 Firmware Revision	7.1

* A CMOS-compatible version of the 1260-14 is available as an option.

2.0 Installation Instructions

2.1 Unpacking and Inspection

Before unpacking the switching module, check the exterior of the shipping carton for any signs of damage. All irregularities should be noted on the shipping bill. Remove the instrument from its carton, preserving the factory packaging as much as possible. Inspect the switching module for any defect or damage. Immediately notify the carrier if any damage is apparent. Have a qualified person check the instrument for safety before use.

2.2 Reshipment Instructions

Use the original packing when returning the switching module to Racal-Dana for calibration or servicing. The original shipping carton and the instrument's plastic foam will provide the necessary support for safe reshipment. If the original packing is unavailable, wrap the switching module in plastic sheeting and use plastic spray foam to surround and protect the instrument. Reship in either the original or a new shipping carton.

2.3 Option 01 Installation

Installation of the Option 01 to the 1260-14 is described in the Installation section of the 1260 Series VXI Switching Cards Manual.

2.4 Module Installation

Installation of the 1260-14 Switching Module into a VXI mainframe, including the setting of DIP switches, is described in the Installation section of the 1260 Series VXI Switching Cards Manual. The ID byte DIP switches, SW1-5 and SW1-6, should be set OFF.

3.0 1260-14 Module Specific Syntax

NOTE

The 1260-14 Digital I/O module is supported by Option 01 Operating Systems at Revision levels 4.1 and above.

The 1260-14 Digital I/O module supports the READ, WRITE, PSETUP, RESET and PDATAOUT commands.

3.1 Syntax

The module specific syntax for the 1260-14 Digital I/O module is:

<module address>.<command>

where <module address> is the address.

NOTE

The <module address> used here is not the VXIbus defined logical address of the Master. It is peculiar to the 1260 Series and describes the switching module in relation to the Master. This address corresponds to the binary value of the switch setting of SW1 on the switching module PCB.

<command> is the operation or setup to be carried out by the 1260-14.

3.1.1 <command> is one of:

3.1.1.1 SE[TUP] m.EN[ABLE][,p,p,p,...,p]

Enable the output drivers for each specified port. The output drivers are tri-stated when not enabled. In order for write data to be present on the data lines, the output driver must be enabled. In order to read data from the data lines, the output driver must be tri-stated. All output drivers are disabled on power up.

CAUTION

Damage to users equipment or to the Digital I/O card could occur if the user enables the output drivers for a port that is connected to a device that is also attempting to drive the data lines.

3.1.1.2 SE[TUP] m.SY[NC],n

Enable the handshake mode of operation (synchronous mode) for "n" number of ports. Synchronous ports are always the lowest numbered ports, i.e., the command SETUP 1.SYNC,5 would cause the digital I/O card at address 1 to have 5 synchronous ports from port 0 to port 4. On power up, synchronous mode is disabled for all ports. When the SYNC command is given, those ports that change configuration from nonsynchronous to synchronous, or vice versa, are re-initialized. This causes any old format, mode, or read/write data to be removed. Consequently, all new synchronous ports must be reprogrammed with a SETUP m.READ/WRITE command before they can be used in synchronous operations. Only those ports that have been defined as synchronous may perform data transfers utilizing the CLKIN and BUSY handshake lines. A WRITE command will work normally on a synchronous port, but a READ command will return whatever data was last left in the port. It will <u>not</u> read the data lines.

3.1.1.3 SE[TUP] m.RD s[,B | ,H],q
SE[TUP] m.RD s,W[,B | ,H],q
SE[TUP] m.RD s,Xx[,Xx...],q

Set up a synchronous port to perform a buffered read operation. A READ of the port will be initiated by the active edge of CLKIN. Read data will be stored in a buffer for up to "q" number of handshake operations. A "q" of 0 implies that the port is to do nothing. The maximum "q" is 256. After the final data transfer has occurred for all synchronous ports, the ARM will be automatically disabled. The user can access the READ data via the PDATA command, but only after the card has been disarmed, either by completing all of its synchronous operations or by the user turning the ARM off. A "W" specifies the port is in the 16 bit WORD mode. Word operations may only occur on even numbered ports, and will place the least significant eight bits in the even port and the most significant eight bits in the following odd numbered port. Word sized operations may <u>not</u> be mixed with bit or byte operations. An "X" specifies the BIT mode of operation. Any number of bits from X0 through X7 may be specified. Only those bits that have been requested will be printed when the user sends a PDATA for the port. The bits will be printed in msb to lsb order. The format defaults to binary when the BIT mode is used. The default MODE is byte mode. An "H" specifies that the output format for the data is to be hexadecimal, a "B" specifies that the output mode is binary, and the default output mode is decimal.

3.1.1.4 SE[TUP] m.WR s[,Y][,yd1,yd2,...yd256]
SE[TUP] m.WR s[,W][,wd1,wd2,...wd256]
SE[TUP] m.WR s[,X][,xd1; xd2;...;xd256]

Set up a synchronous port to perform a buffered write operation. A WRITE to the port will be initiated by the active edge of CLKIN. Up to 256 data items can be set up ahead of time, allowing up to 256 synchronous write operations to occur. Three different modes of operation may be specified for a port. Any time a mode is specified, the previous WRITE data is cleared from the ports buffer, otherwise the data will be appended to the existing data in the buffer, for up to 256 data items. The Word, Byte and Bit modes may not be mixed in a port; only one mode may be used at a time. A "W" specifies the port is in the 16 bit WORD mode. Word operations may only occur on even numbered ports, and will place the least significant eight bits in the even port and the most significant eight bits in the following odd numbered port. A "Y" will set the port to the BYTE sized transfer. An "X" specifies the bit mode of operation. The xth bit of the port will be ORed (if "Hx"') or ANDed (if "Lx"') with the previous data item. then written to the ports buffer. Data from each ports buffer will be written to the port following each active edge of CLKIN, for as long as there is data in the buffer. The buffer may contain up to 256 data items. See example A below.

3.1.1.5 SE[TUP] m.BU[SY],POS | NEG

Define the polarity of the BUSY handshake line. Setting the polarity to negative will cause the BUSY line to be inverted. The default power up condition is POS.

3.1.1.6 SE[TUP] m.CL[KIN],POS | NEG

Define the polarity of the CLKIN handshake line. Setting the polarity to negative will cause the CLKIN line to be inverted. The default power up condition is POS.

3.1.1.7 SE[TUP] m.AR[M],ON | OFF

Arm/disarm the synchronous handshake mode. Setup data for may only be entered when the ARM is OFF. Once the card is armed, any attempts to send a setup command other than a SETUP x.ARM,OFF will cause an error. The completion of the last buffered READ/WRITE will automatically set the ARM mode to OFF. Synchronous data transfers may only take place when ARM is ON. The active edge of CLKIN, which is used to invoke data transfers, will be disregarded when ARM is OFF. The default power up condition is OFF. Each time the ARM is toggled, synchronous READ/WRITE operations restart at the

beginning, i.e., if the user sets up a port to output five data items, resetting the ARM will cause the first data item to be transferred at the next CLKIN signal no matter what the last data item transferred was. PDATA commands will not be recognized until ARM is OFF.

3.1.1.8 PS[ETUP] m

Show the condition of all the setup variables.

3.1.1.9 RE[AD] m.p[,B | ,H]
RE[AD] m.p,W[,B | ,H]
RE[AD] m.p,Xx[,Xx...]

Read data from the specified ports with no handshaking. An immediate read of the specified ports will occur, and an SRQ will be sent to the GPIB when completed. Data for each requested port will be sent to the user in the order of lowest port to highest. All data will be in the form requested. A READ from a synchronous port will not read the data lines. Instead, it will return whatever the last data was that was latched into the port by CLKIN. A "W" specifies that the port is in the 16 bit WORD mode. Word operations may only occur on even numbered ports and will place the least significant eight bits in the even port and the most significant eight bits in the following odd numbered port. An "X" specifies the BIT mode of operation. Any number of bits from X0 through X7 may be specified. Although all eight bits of the port are read, only those bits that have been requested will be printed. The bits will be printed in msb to lsb order. The format defaults to binary when the BIT mode is used. The default MODE is byte mode. An "H" specifies that the output format for the data is to be hexadecimal, a "B" specifies that the output mode is binary, and the default output mode is decimal.

3.1.1.10 WR[ITE] m.p[,yd0,yd1,...,yd11]
WR[ITE] m.p[,W][,wd0,wd2,...wd10]
WR[ITE] m.p[,X][,xd0;xd1;.....;xd11]

Write data to the specified port with no handshaking. This will cause all specified data to be written immediately to the port with no handshaking, one data item per port. Data is in low port to high port order. A "W" will put the port in the WORD mode. Word sized operations may only occur on even numbered ports, and will place the least significant 8 bits in the even port and the most significant 8 bits in the following odd numbered port. An Lx or Hx specifies the port is in the BIT mode. The data from the ports most recent READ or RIGHT will be ORed (if Hx) or ANDed (if Lx) with the bit data then written to the port. An "X" will cause the data to be ORed or ANDed with zero instead of the previous value.

3.1.1.11 PD[ATA] m1[.p],...,mn[.p]

Output data for specified ports in the order given. Each ports data will be preceded with the port number and a colon. For each synchronous port specified, the data will be output in the format defined by the last setup command for that port. For each asynchronous port, the data will be output in the same format used by the last read or write command to that port.

3.1.1.12 DEFINITION OF TERMS: All terms in capital letters are to be used directly in the command syntax. All lower case letters are to be replaced by a numeric value in the range specified.

B ==:	Specifies a BINARY format for output data.
Bv==:	Specifies a BINARY format for input data.
H ==:	Specifies a HEXADECIMAL format for output data.
Hv==:	Specifies a HEXADECIMAL format for input data.
Hx==:	HI written to bit number x (0-7) for the specified port.
Lx==:	LOW written to bit number x (0-7) for the specified port.
W ==:	Set WORD mode active & clear the buffer for this port.
X ==:	Set BIT mode active & clear the buffer for this port.
Xx==:	Sets which bits (X0 - X7) to display for this read port.
Y ==:	Set BYTE mode active & clear the buffer for this port.
d ==:	8 or 16 bit data in the form:
	v ==: Decimal format
	Bv ==: Binary format
	Hv ==: Hexadecimal format
m ==:	Module logical address (1-11).
n ==:	Number of ports to make synchronous (0-12).
p ==:	Port number (0-11) or range of ports in the form (s | low_s-high_s).
q ==:	Number of buffered READ operations to perform for this port.
s ==:	single port number (0-11).
v ==:	Decimal, hexadecimal, or binary numeric value.
x ==:	Bit number (0-7).
wd==:	16 bit data in the form v | Bv | Hv where $0 \leq v \leq 65535$
xd==:	1 bit data in the form Lx | Hx[,Lx | ,Hx]
yd==:	8 bit data in the form v | Bv | Hv where $0 \leq v \leq 255$
[]==:	All entries in brackets are optional.
| ==:	Select one of the choices given.

EXAMPLE A: An example of SETUP READ/WRITE commands (1260-14 in slot 1) using the Synchronous mode of operation.

1. SE 1.SY,2<CR><LF>	Sets up 2 ports for SYNC mode (starting at port 0); ports 2-11 will be in ASYN mode.
2. SE 1.RE 0,8<CR><LF>	Reads data into 1st 8 buffer locations.
3. SE 1.WR,1,Y,1,2,3,4<CR><LF>	Writes data to the 1st 4 buffer locations.
4. SE 1.WR,1,5,6,7,8<CR><LF>	Writes data to the next 4 buffer locations.

Now the 1260-14 has data in the 1st 8 buffer locations for port 1.

5. SE AR, ON<CR><LF>	Enable SYNC handshake of READ/WRITE.

Now 8 clock inputs occur each one causing a READ/WRITE to/from ports 0/1 for the 8 programmed buffer locations. The 8th clock input will cause an SRQ, and the 1260-14 will dis-arm and stop handshaking till it has been (optionally re-programmed then) re-armed.

6. PD 1.0<CR><LF>	Read the data from the 1260-14.

Now repeat Steps 3-6 above using a new set of WRITE data, or just re-arm repeat the above test.

EXAMPLE B: An example of SETUP READ/WRITE commands (1260-14 in slot 1) using a mixture of Synchronous and Asynchronous modes of operation.

1. SE 1.SY,1<CR><LF>	Set 1 port starting at port 0 for SYNC mode (port 0 will be used as a handshake control port while ports 1-11 will be data ports), ports 1-11 will be in ASYN mode.

For this example, port 1 will do ASYN WRITEs, and ports 2-5 ASYN READs.

2. SE 1.WR,0,Y,1<CR><LF>	Write data (1) for port 0; buffer length = 1.
3. WR 1.1,22<CR><LF>	Write data (22) to port 1.

4. SE AR, ON<CR><LF> Enable SYNC handshake on port 0.

Now 1 clock input will occur causing the 1260-14 to dis-arm and stop handshaking.

5. RE 1.2-5,H<CR><LF> Read data in Hex format from ports 2-5.

6. WR 1.1,44<CR><LF> Write new data (44) to port 1.

7. SE AR, ON<CR><LF> Enable SYNC handshake on port 0.

Now 1 clock input will occur causing the 1260-14 to dis-arm and stop handshaking. Loop Steps 5-7 as above to repeat WRITE/READ operation.

3.2 1260-14 Pin Configuration

3.2.1 The 1260-14 Digital I/O module has 96 channels, grouped as 12 eight bit ports available at front panel connectors J1 through J4. Each port may be configured as an input or an output.

3.2.2 Refer to Figure 3-1 for the pin configurations of the 50 and 60 pin connectors on the front panel, and to Table 3-1 for the correspondence between the physical channel assignments and the port numbers used in the command codes.

3.2.3 Refer to Table 3-2 for the correspondence between the front panel pins and the signal names and descriptions.

Table 3-1, 1260-14 Channels and Ports

Channel No.	Port No.	Tri-State Control
1 - 8	0	EDRVR0
9 - 16	1	EDRVR1
17 - 24	2	EDRVR2
25 - 32	3	EDRVR3
33 - 40	4	EDRVR4
41 - 48	5	EDRVR5
49 - 56	6	EDRVR6
57 - 64	7	EDRVR7
65 - 72	8	EDRVR8
73 - 80	9	EDRVR9
81 - 88	10	EDRVR10
89 - 96	11	EDRVR11

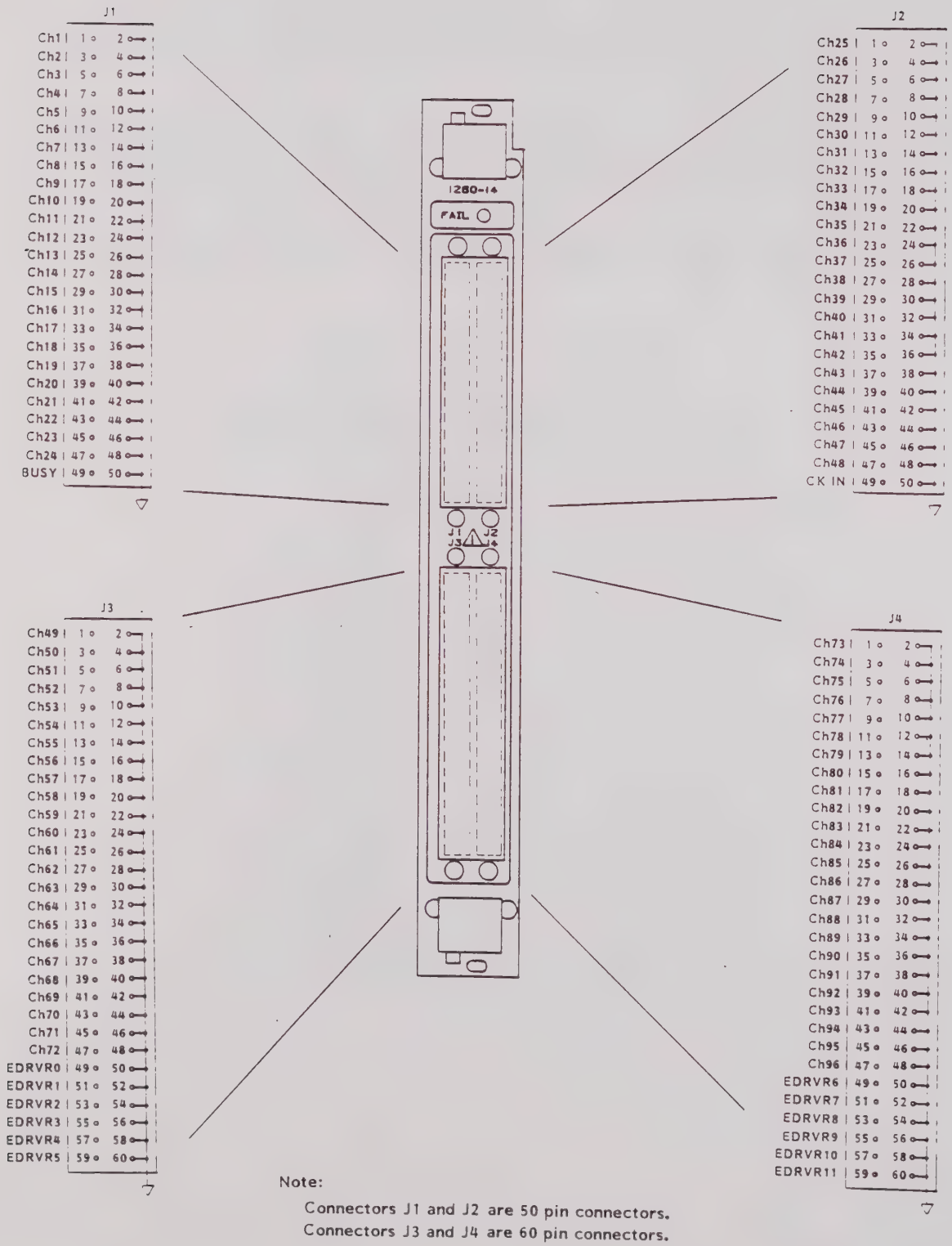

Note:

Connectors J1 and J2 are 50 pin connectors.
Connectors J3 and J4 are 60 pin connectors.

Figure 3-1, 1260-14 Front Panel and Pin Configuration

Table 3-2, 1260-14 Pins, Signals and Descriptions

J1 Pin	Row A Signal	Description
1	CH1	Channel 1 I/O
3	CH2	Channel 2 I/O
5	CH3	Channel 3 I/O
7	CH4	Channel 4 I/O
.	.	.
.	.	.
.	.	.
45	CH23	Channel 23 I/O
47	CH24	Channel 24 I/O
49	BSY	BUSY Handshake output.

J1 Pin	Row B Signal	Description
2	GND	Channel 1 RTN
4	GND	Channel 2 RTN
6	GND	Channel 3 RTN
8	GND	Channel 4 RTN
.	.	.
.	.	.
.	.	.
44	GND	Channel 22 RTN
46	GND	Channel 23 RTN
48	GND	Channel 24 RTN
50	GND	BUSY Signal return

Table 3-2, 1260-14 Pins, Signals and Descriptions (continued)

JPin	Row A Signal	Description
1	CH25	Channel 25 I/O
3	CH26	Channel 26 I/O
5	CH27	Channel 27 I/O
7	CH28	Channel 28 I/O
.	.	.
.	.	.
.	.	.
45	CH47	Channel 47 I/O
47	CH48	Channel 48 I/O
49	BSY	CKIN Handshake output.

J2 Pin	Row B Signal	Description
2	GND	Channel 25 RTN
4	GND	Channel 26 RTN
6	GND	Channel 27 RTN
8	GND	Channel 28 RTN
.	.	.
.	.	.
.	.	.
44	GND	Channel 46 RTN
46	GND	Channel 47 RTN
48	GND	Channel 48 RTN
50	GND	CKIN Signal return

Table 3-2, 1260-14 Pins, Signals and Descriptions (continued)

J3 Pin	Row A Signal	Description
1	CH49	Channel 49 I/O
3	CH50	Channel 50 I/O
5	CH51	Channel 51 I/O
7	CH52	Channel 52 I/O
.	.	.
.	.	.
.	.	.
45	CH71	Channel 71 I/O
47	CH72	Channel 72 I/O
49	EDRVR 0	Driver Enable 0
51	EDRVR 1	Driver Enable 1
53	EDRVR 2	Driver Enable 2
55	EDRVR 3	Driver Enable 3
57	EDRVR 4	Driver Enable 4
59	EDRVR 5	Driver Enable 5

J3 Pin	Row B Signal	Description
2	GND	Channel 49 RTN
4	GND	Channel 50 RTN
6	GND	Channel 51 RTN
8	GND	Channel 52 RTN
.	.	.
.	.	.
.	.	.
44	GND	Channel 70 RTN
46	GND	Channel 71 RTN
48	GND	Channel 72 RTN
50	GND	EDRVR0 RTN
52	GND	EDRVR1 RTN
54	GND	EDRVR2 RTN
56	GND	EDRVR3 RTN
58	GND	EDRVR4 RTN
60	GND	EDRVR5 TRN

3.2.4 When operating as an output, the port may be tri-stated under either software or hardware control, as shown in Figure 3-2. If the EDRVR(n) signal is not tied to a logic level via the user interface, internal pull-up resistors act to enable the drivers for port (n).

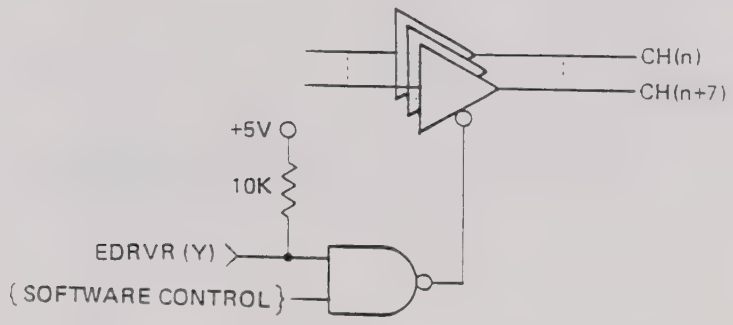

Figure 3-2, 1260-14 Tri-State Control

3.3 1260-14 Operating Modes

The 1260-14 has three operating modes available. These are:

- Synchronous
- Asynchronous
- Mixed Synchronous and Asynchronous

There is a limitation placed on the module in the mixed synchronous and asynchronous mode. Synchronous and asynchronous transfers cannot occur simultaneously.

3.3.1 1260-14 Handshaking Mode

The module has a two wire handshake mode available for the control of synchronous I/O transactions. The polarity of the handshake lines is programmable for both the BUSY and CLKIN lines. Refer to Figure 3-3 for the timing diagrams of the input and output handshaking modes available.

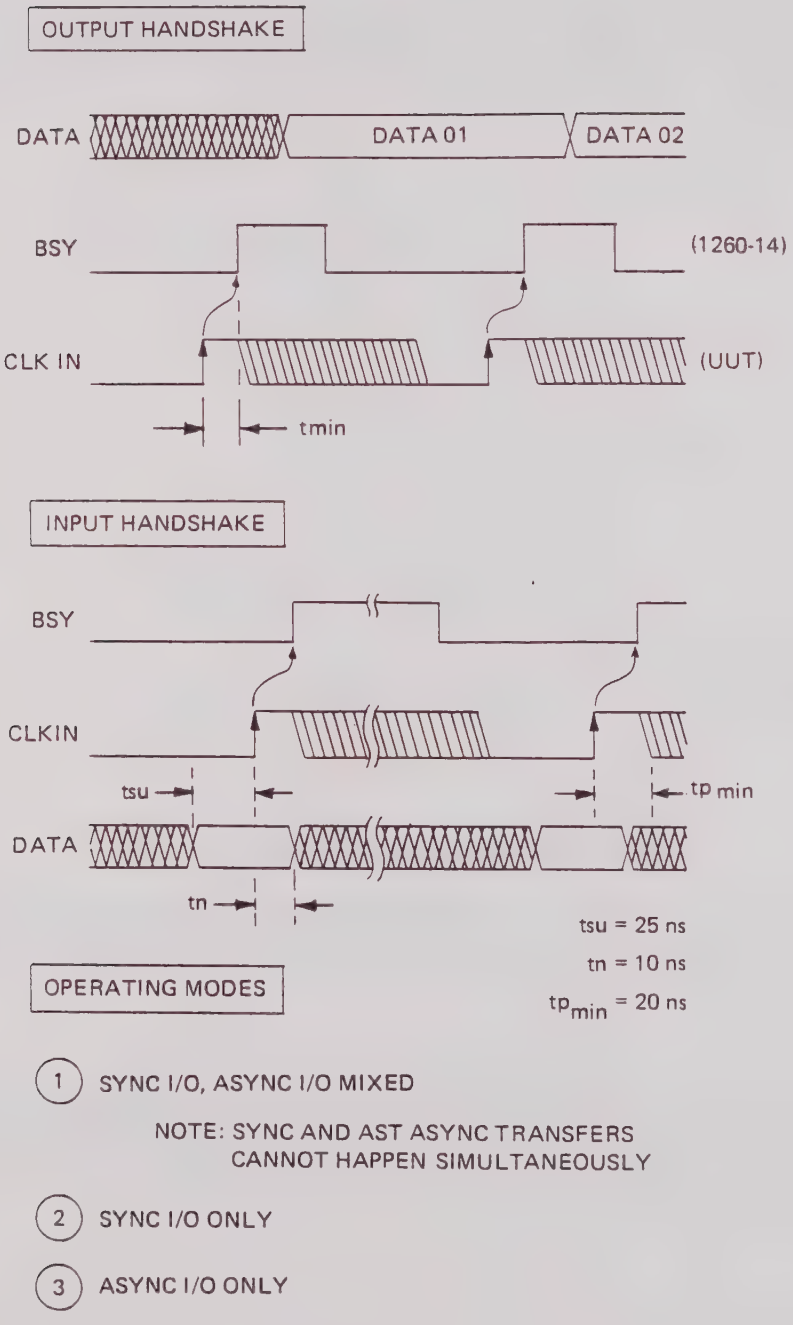

Figure 3-3, 1260-14 Input and Output Handshake Modes

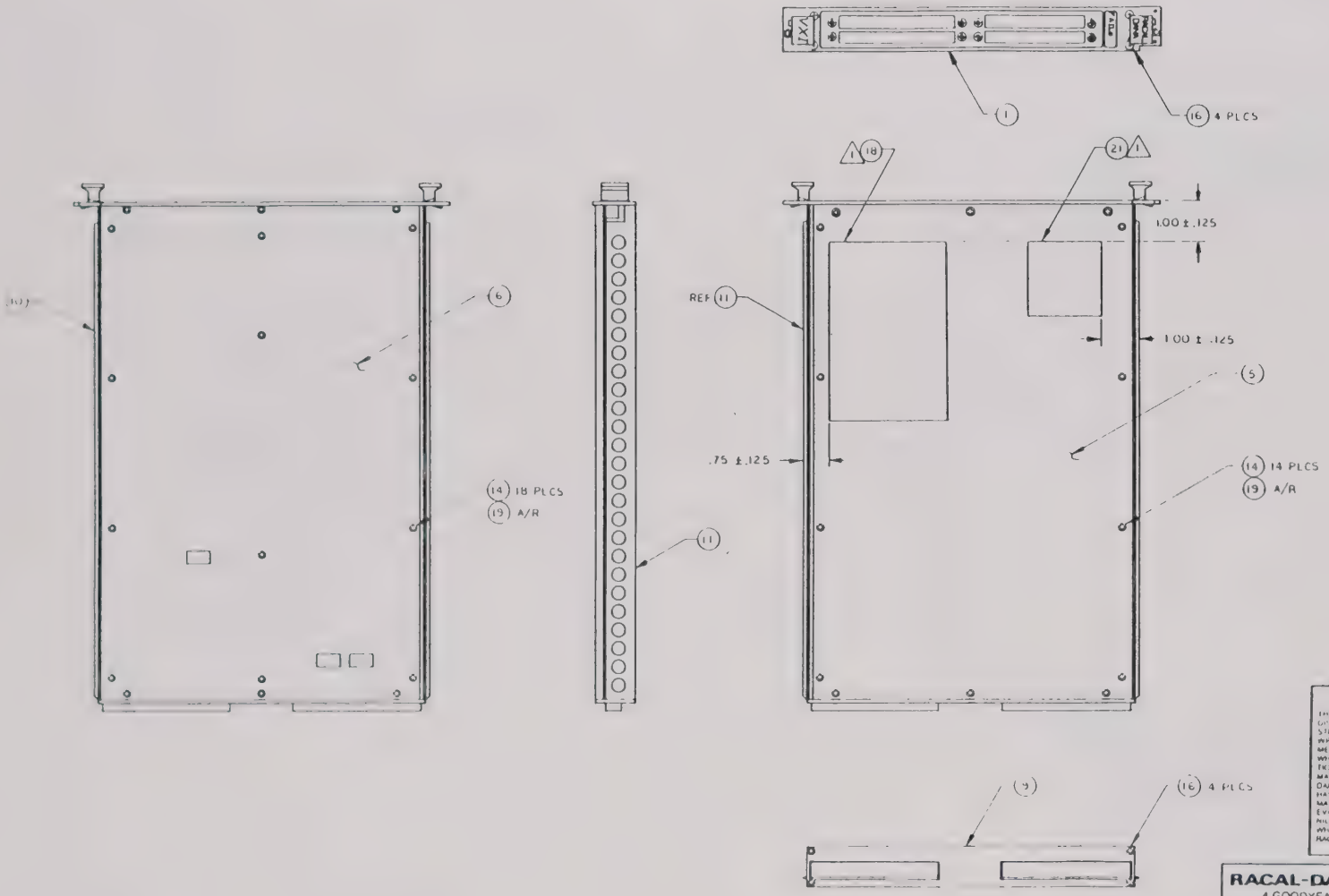

PROPRIETARY NOTICE

THIS DOCUMENT AND THE TECHNICAL DATA HEREIN DISCLOSED ARE PROPRIETARY TO RACAL-DANA INSTRUMENTS INC. AND SHALL NOT WITHOUT EXPRESS WRITTEN PERMISSION OF RACAL-DANA INSTRUMENTS INC. BE USED, RELEASED OR DISCLOSED IN WHOLE OR IN PART, OR USED TO SOLICIT QUOTATIONS FROM A COMPETITIVE SOURCE OR USED FOR MANUFACTURE BY ANYONE OTHER THAN RACAL-DANA INSTRUMENTS INC. THE INFORMATION HEREON HAS BEEN DEVELOPED AT PRIVATE EXPENSE AND MAY ONLY BE USED FOR PURPOSES OF ENGINEERING EVALUATION AND FOR INCORPORATION INTO TECHNICAL SPECIFICATIONS AND OTHER DOCUMENTS WHICH SPECIFY PROCUREMENT OF PRODUCTS FROM RACAL-DANA INSTRUMENTS INC.

RACAL-DANA Instruments Inc.
4 GOODYEAR, IRVINE CALIFORNIA 92714

DOCUMENT TITLE

FINAL ASSY, 1260-14

SIZE	CODE IDENT NO	DOCUMENT NO	REV
D	21793	404916	A
SCALE		SHEET 1 OF 2	

2. INCLUDE ITEM 3 (SHIPPING KIT) IN BOX WITH ASSY
3. LOCATE LABELS WHERE SHOWN

NOTES: UNLESS OTHERWISE SPECIFIED

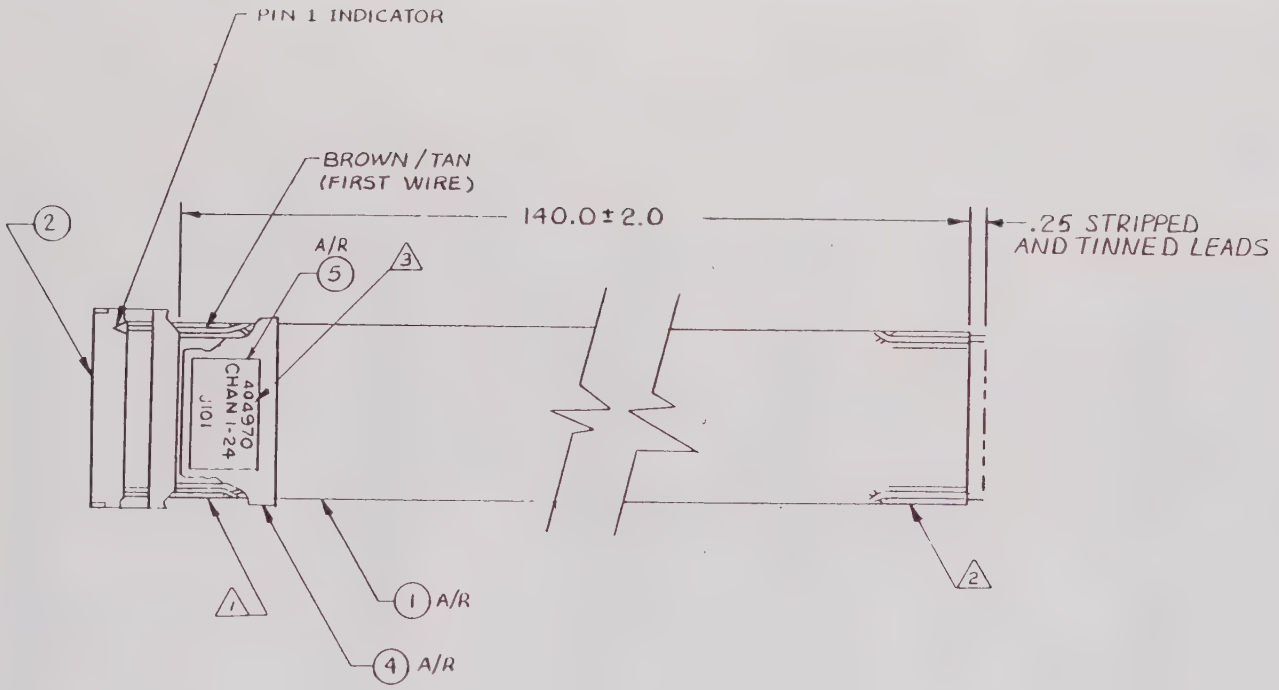

3. MARK CABLE USING BLACK EPOXY INK OR EQUIVALENT.

2. LEADS TO BE STRIPPED AND TINNED IN STRAIGHT (NON-TWISTED) SECTION OF CABLE.

1. CONNECTOR (ITEM 2) TO BE INSTALLED IN STRAIGHT (NON-TWISTED) SECTION OF CABLE.

NOTES UNLESS OTHERWISE SPECIFIED

PROPRIETARY NOTICE
THIS DRAWING AND THE TECHNICAL DATA HEREIN DISCLOSED ARE THE PROPRIETARY PROPERTY OF RACAL DANA INSTRUMENTS INC. AND SHALL NOT WITHOUT EXPRESS WRITTEN PERMISSION OF RACAL DANA INSTRUMENTS INC BE USED, RELEASED OR DISCLOSED IN WHOLE OR IN PART OR USED TO SOLICIT QUOTATIONS FROM A COMPETITIVE SOURCE OTHERWISE MANUFACTURING BY ANYONE OTHER THAN RACAL DANA INSTRUMENTS INC. THE INFORMATION HEREIN HAS BEEN DEVELOPED AT PRIVATE EXPENSE AND MAY ONLY BE USED FOR PURPOSES OF ENGINEERING EVALUATION AND FOR INCORPORATION INTO TECHNICAL SPECIFICATIONS AND OTHER DOCUMENTS WHICH SPECIFY PROCUREMENT OF PRODUCTS FROM RACAL DANA INSTRUMENTS INC.

RACAL-DANA Instruments Inc.
4 GOODYEAR IRVINE, CALIFORNIA 92714

DOCUMENT TITLE
CABLE ASSY, 1260-14, J101

SIZE	CODE IDENT NO	DOCUMENT NO	REV
C	21793	404970	A

SCALE NONE SHEET 1 OF 2

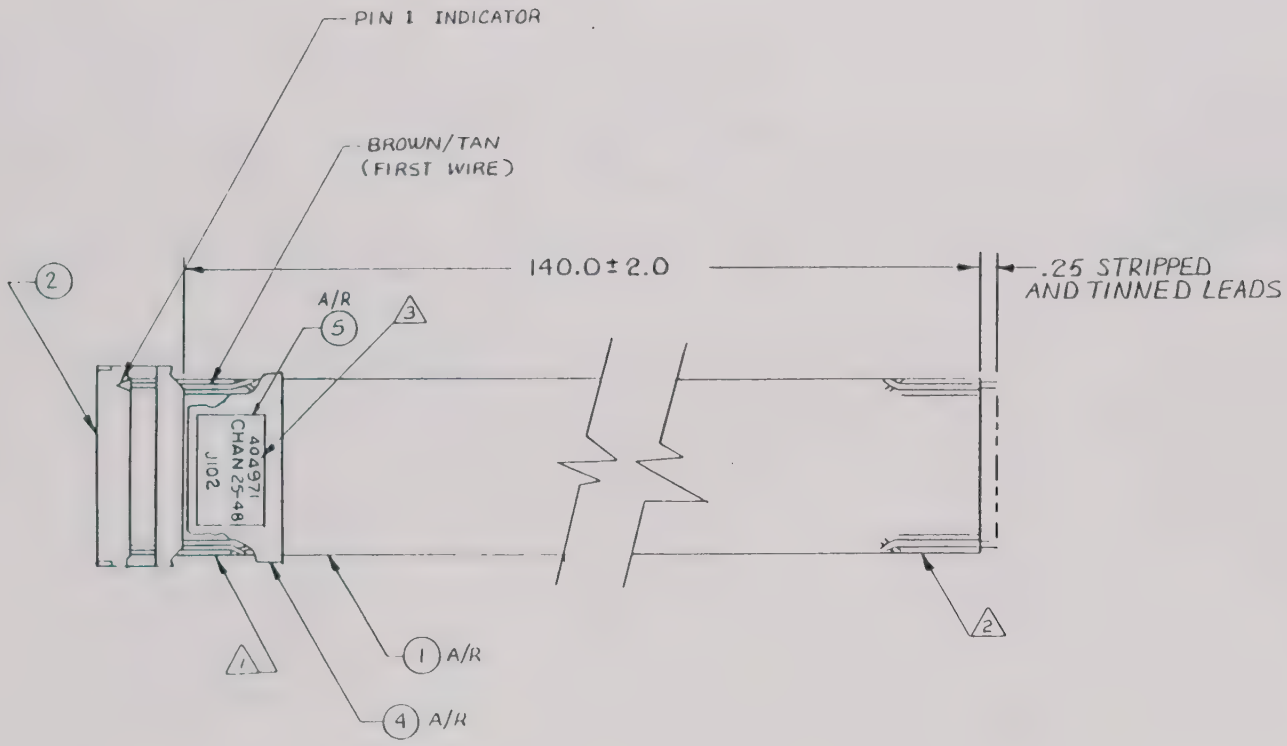

3. MARK CABLE USING BLACK EPOXY INK OR EQUIVALENT.

4. LEADS TO BE STRIPPED AND TINNED IN STRAIGHT (NON-TWISTED) SECTION OF CABLE.

5. CONNECTOR (ITEM 2) TO BE INSTALLED IN STRAIGHT (NON-TWISTED) SECTION OF CABLE.

PROPRIETARY NOTICE
THIS DOCUMENT AND THE TECHNICAL DATA HEREIN DISCLOSED ARE PROPRIETARY TO RACAL DANA INSTRUMENTS INC. AND SHALL NOT, WITHOUT EXPRESS WRITTEN PERMISSION OF RACAL DANA INSTRUMENTS INC., BE USED, RELEASED OR DISCLOSED IN WHOLE OR IN PART OR USED TO SOLICIT QUOTATIONS FROM A COMPETITIVE SOURCE OR USED FOR MANUFACTURE BY ANYONE OTHER THAN RACAL DANA INSTRUMENTS INC. THE INFORMATION HEREIN CONTAINED HAS BEEN DEVELOPED AT PRIVATE EXPENSE AND MAY ONLY BE USED FOR PURPOSES OF ENGINEERING EVALUATION AND FOR INFORMATION INTO TECHNICAL SPECIFICATIONS AND OTHER DOCUMENTS WHICH SPECIFY PROCUREMENT OF PRODUCTS FROM RACAL DANA INSTRUMENTS INC.

RACAL-DANA Instruments Inc.
4 GOODYEAR, IRVINE, CALIFORNIA 92714

DOCUMENT TITLE
CABLE ASSY, 1260-14, J102

SIZE	CODE IDENT NO	DOCUMENT NO	REV
C	21793	404971	A

SCALE NONE SHEET 1 OF 2

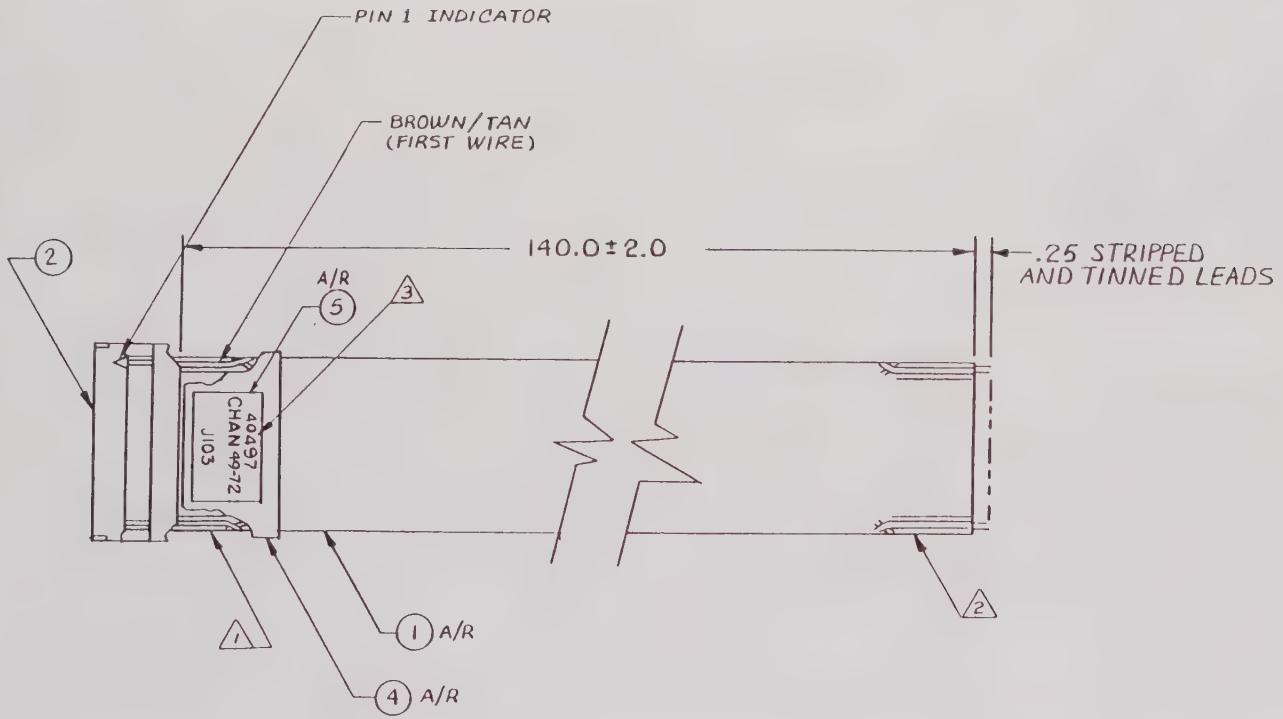

3. MARK CABLE USING BLACK EPOXY INK OR EQUIVALENT.

2. LEADS TO BE STRIPPED AND TINNED IN STRAIGHT (NON-TWISTED) SECTION OF CABLE.

1. CONNECTOR (ITEM 2) TO BE INSTALLED IN STRAIGHT (NON-TWISTED) SECTION OF CABLE.

NOTES UNLESS OTHERWISE SPECIFIED

PROPRIETARY NOTICE
THIS DOCUMENT AND THE TECHNICAL DATA HEREON DISCLOSED ARE PROPRIETARY TO RACAL DANA INSTRUMENTS INC. AND SHALL NOT WITHOUT EXPRESS WRITTEN PERMISSION OF RACAL DANA INSTRUMENTS INC. BE USED, RELEASED OR DISCLOSED IN WHOLE OR IN PART OR USED TO SOLICIT QUOTATIONS FROM A COMPETITIVE SOURCE OR USED FOR MANUFACTURE BY ANYONE OTHER THAN RACAL DANA INSTRUMENTS INC. THE INFORMATION HEREON HAS BEEN DEVELOPED AT PRIVATE EXPENSE AND MAY ONLY BE USED FOR PURPOSES SUCH AS ENGINEERING EVALUATION AND FOR INCORPORATION INTO TECHNICAL SPECIFICATIONS AND OTHER DOCUMENTS WHICH SPECIFY PROCUREMENT OF PRODUCTS FROM RACAL DANA INSTRUMENTS INC.

RACAL-DANA Instruments Inc.
4 GOODYEAR, IRVINE, CALIFORNIA 92714

DOCUMENT TITLE

CABLE ASSY, 1260-14, J103

SIZE	CODE IDENT NO	DOCUMENT NO	REV
C	21793	404973	A

SCALE NONE SHEET 1 OF 2

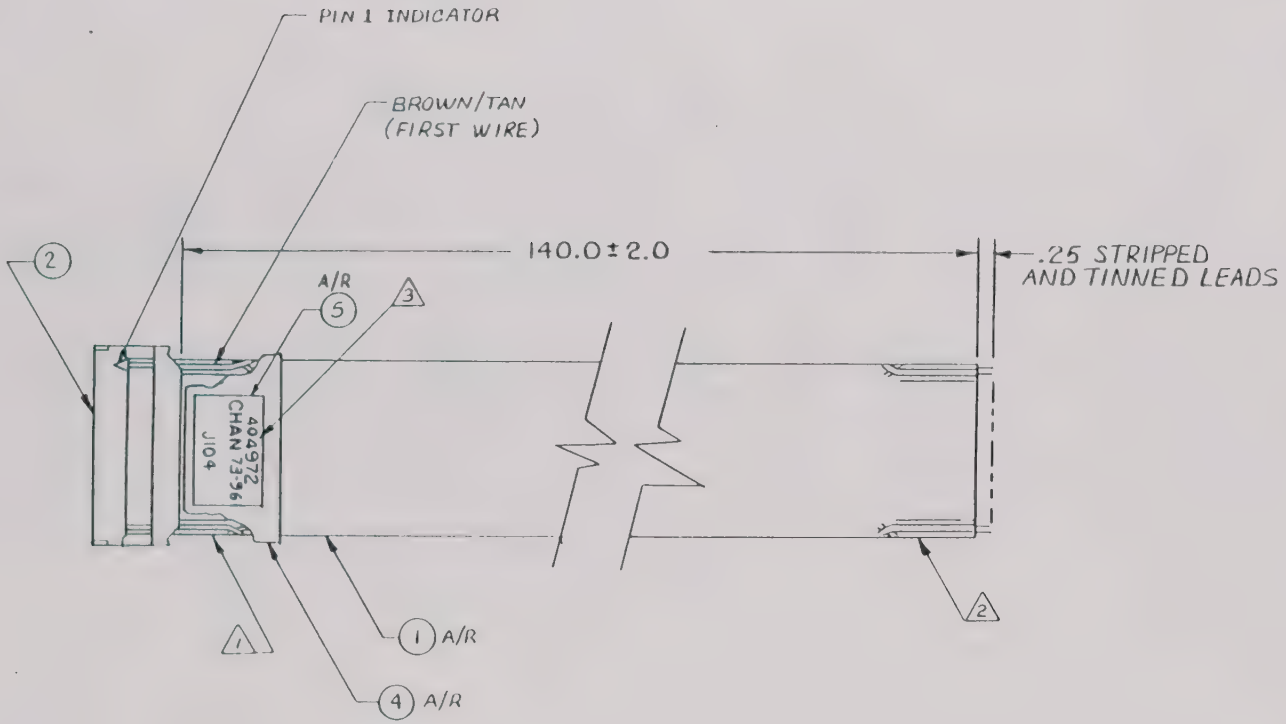

3. MARK CABLE USING BLACK EPOXY INK OR EQUIVALENT.

2. LEADS TO BE STRIPPED AND TINNED IN STRAIGHT (NON-TWISTED) SECTION OF CABLE.

1. CONNECTOR (ITEM 2) TO BE INSTALLED IN STRAIGHT (NON-TWISTED) SECTION OF CABLE.

NOTES UNLESS OTHERWISE SPECIFIED

PROPRIETARY NOTICE
THIS DOCUMENT AND THE TECHNICAL DATA HEREIN DISCLOSED ARE PROPRIETARY TO RACAL DANA INSTRUMENTS INC AND SHALL NOT WITHOUT EXPRESS WRITTEN PERMISSION OF RACAL DANA INSTRUMENTS INC BE USED RELEASED OR DISCLOSED IN WHOLE OR IN PART OR USED TO SOLICIT QUOTATIONS FROM A COMPETITIVE SOURCE OR USED FOR MANUFACTURE BY ANYONE OTHER THAN RACAL DANA INSTRUMENTS INC THE INFORMATION HEREIN HAS BEEN DEVELOPED AT PRIVATE EXPENSE AND MAY ONLY BE USED FOR PURPOSES OF EVALUATION AND FOR INCORPORATION INTO TECHNICAL SPECIFICATIONS AND OTHER DOCUMENTS WHICH SPECIFY PROCUREMENT OF PRODUCTS FROM RACAL DANA INSTRUMENTS INC

RACAL-DANA Instruments Inc.	4 GOODYEAR, IRVINE, CALIFORNIA 92714
DOCUMENT TITLE	CABLE ASSY, 1260-14, J104
SIZE / CODE IDENT NO / DOCUMENT NO / REV	C / 21793 / 404972 / A
SCALE NONE	SHEET 1 OF 2

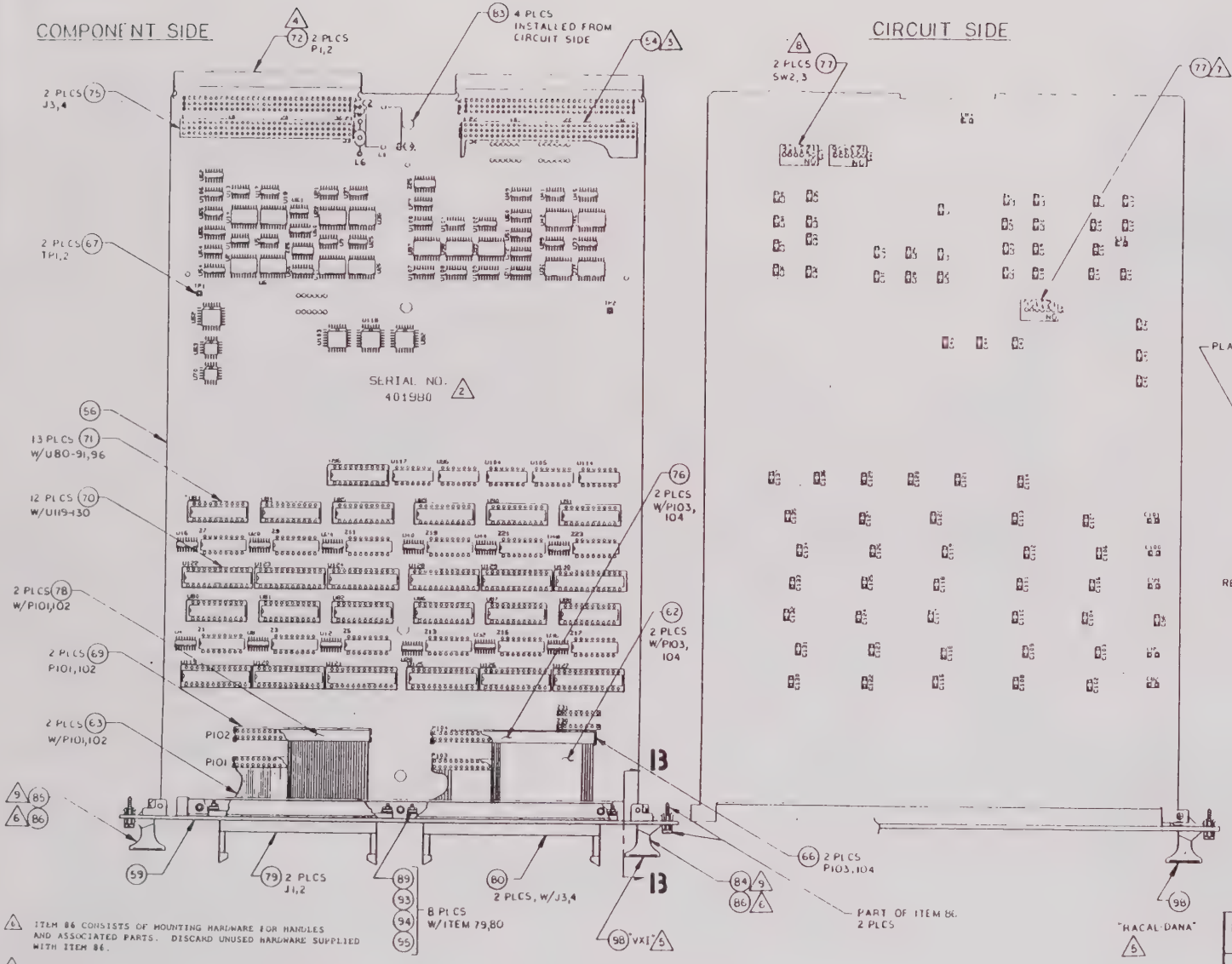

1. ITEM 86 CONSISTS OF MOUNTING HARDWARE FOR HANDLES AND ASSOCIATED PARTS. DISCARD UNUSED HARDWARE SUPPLIED WITH ITEM 86.
2. INSTALL ITEM 98 (RACAL-DANA VXI LABELS) RIGHT-READING WITH ITEM 59 NOMENCLATURE.
3. P1 & P2 MUST BE INSTALLED FLUSH AT RIGHT ANGLE TO PCB.
4. INSTALL (ITEM 54) PCB, INTO (ITEM 75) J4.
5. INK STAMP SERIAL NUMBER ON COMPONENT SIDE IN INDICATED AREA
6. REFERENCE SCHEMATIC #31980.

NOTES UNLESS OTHERWISE SPECIFIED

7. ITEM 84 CONSISTS OF 1 BOTTOM HANDLE, MOUNTING BLOCK AND ASSOCIATED PARTS. ITEM 85 IS THE SAME (AS ITEM 84), BUT THE HANDLE IS FOR THE TOP.
8. SET SW2,SW3 (ITEM 77) TO ON POSITION. DO NOT WAVE SOLDER.
9. SET SW1 (ITEM 77) TO LOGICAL ADDRESS 1 PER TABLE 1 DO NOT WAVE SOLDER.

PROPRIETARY NOTICE
THIS DOCUMENT AND THE TECHNICAL DATA HEREIN DISCLOSED ARE PROPRIETARY TO RACAL-DANA INSTRUMENTS INC. AND SHALL NOT WITHOUT EXPRESS WRITTEN PERMISSION OF RACAL-DANA INSTRUMENTS INC. BE USED RELEASED OR DISCLOSED IN WHOLE OR IN PART OR USED TO SOLICIT QUOTATIONS FROM A COMPETITIVE SOURCE OR USED FOR MANUFACTURE BY ANYONE OTHER THAN RACAL-DANA INSTRUMENTS INC. THE INFORMATION HEREIN HAS BEEN DEVELOPED AT PRIVATE EXPENSE AND MAY ONLY BE USED FOR PURPOSES OF ENGINEERING EVALUATION AND FOR INCORPORATION INTO TECHNICAL SPECIFICATIONS AND OTHER DOCUMENTS WHICH SPECIFY PROCUREMENT OF PRODUCTS FROM RACAL-DANA INSTRUMENTS INC.

RACAL-DANA Instruments Inc. 4 GOODYEAR IRVINE CALIFORNIA 92714			
DOCUMENT TITLE: PCB ASSY, 1260 I4			
SIZE: D	CODE IDENT NO: 21793	DOCUMENT NO: 401980	REV: A
SCALE: 1:1		SHEET 1 OF 4	

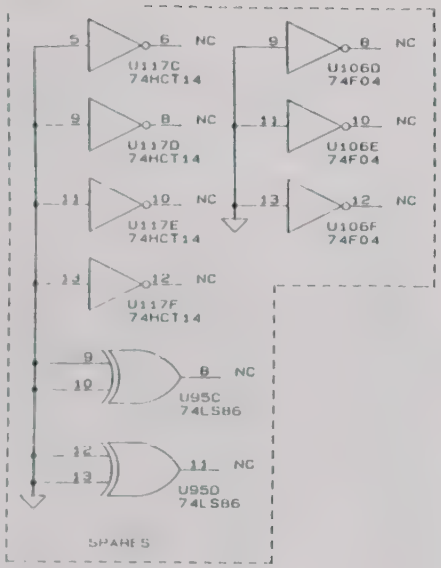

REF. DES.	IC TYPE	+5V PIN NO.	GND PIN NO
U119-130	74LS652	24	12
U118	231297 (22V10H)	28	14
U117	74HCT14	14	7
U104, 105, 114	74HCT00	14	7
U103	231298 (20RA10J)	28	15
U96	74ALS244	20	10
U95	74LS86	14	7
U92	231299 (22V10H)	28	14
U80-91	74ALS645A-1	20	10
U71, 72	74HCT253	16	8
U70	231152 (16L8Q)	20	10
U64, 65, 106	74F04	14	7
U57	LM339	3	12
U56	74HCT85	16	8
U54 55	74LS138	16	8
U53	231153 (16R4)	20	10
U52	231154 (22V10H)	28	14
U51	26LS31	16	8
U49 50	26LS32	16	8
U4, 8, 12, 16, 20, 24, U28, 32, 36, 40, 44, 48, 60, U107-109	74HCT166	16	8
U2, 6, 10, 14, 18, 22, U26, 30, 34, 38, 42, 46, U97 99	74HCT273	20	10
U1, 5, 9, 13, 17, 21, 25, U29, 33, 37, 41, 45, 61, U62, 100-102	74HCT164	14	7

IC POWER AND GROUND CONNECTIONS

HIGHEST REF. DES
Z31
U130
TP2
SW3
P104
L6
J4
C137

2 RESISTOR NETWORKS ARE IN OHMS

1 CAPACITOR VALUES ARE IN MICROFARADS, 50V. +/- 20% UNLESS OTHERWISE SPECIFIED

NOTES UNLESS OTHERWISE SPECIFIED

PROPRIETARY NOTICE

THIS DOCUMENT AND THE TECHNICAL DATA HEREON DISCLOSED ARE PROPRIETARY TO RACAL DANA INSTRUMENTS INC AND SHALL NOT WITHOUT EXPRESS WRITTEN PERMISSION OF RACAL DANA INSTRUMENTS INC BE USED RELEASED OR DISCLOSED IN WHOLE OR IN PART OR USED TO SOLICIT QUOTATIONS FROM A COMPETITIVE SOURCE OR USED FOR MANUFACTURE BY ANYONE OTHER THAN RACAL DANA INSTRUMENTS INC THE INFORMATION HEREON HAS BEEN DEVELOPED AT PRIVATE EXPENSE AND MAY ONLY BE USED FOR PURPOSES OF ENGINEERING EVALUATION AND FOR INCORPORATION INTO TECHNICAL SPECIFICATIONS AND OTHER DOCUMENTS WHICH SPECIFY PROCUREMENT OF PRODUCTS FROM RACAL DANA INSTRUMENTS INC

RACAL-DANA Instruments Inc.
4 GOODYEAR, IRVINE, CALIFORNIA 92714

DOCUMENT TITLE

SCHEM., 1260-14

SIZE	CODE IDENT NO	DOCUMENT NO	REV
B	21793	431980	A

SCALE ---------- SHEET 1 OF 14

SIZE	CODE IDENT NO	DOCUMENT NO	REV
B	21793	431980	A
SCALE		SHEET 2 OF 14	

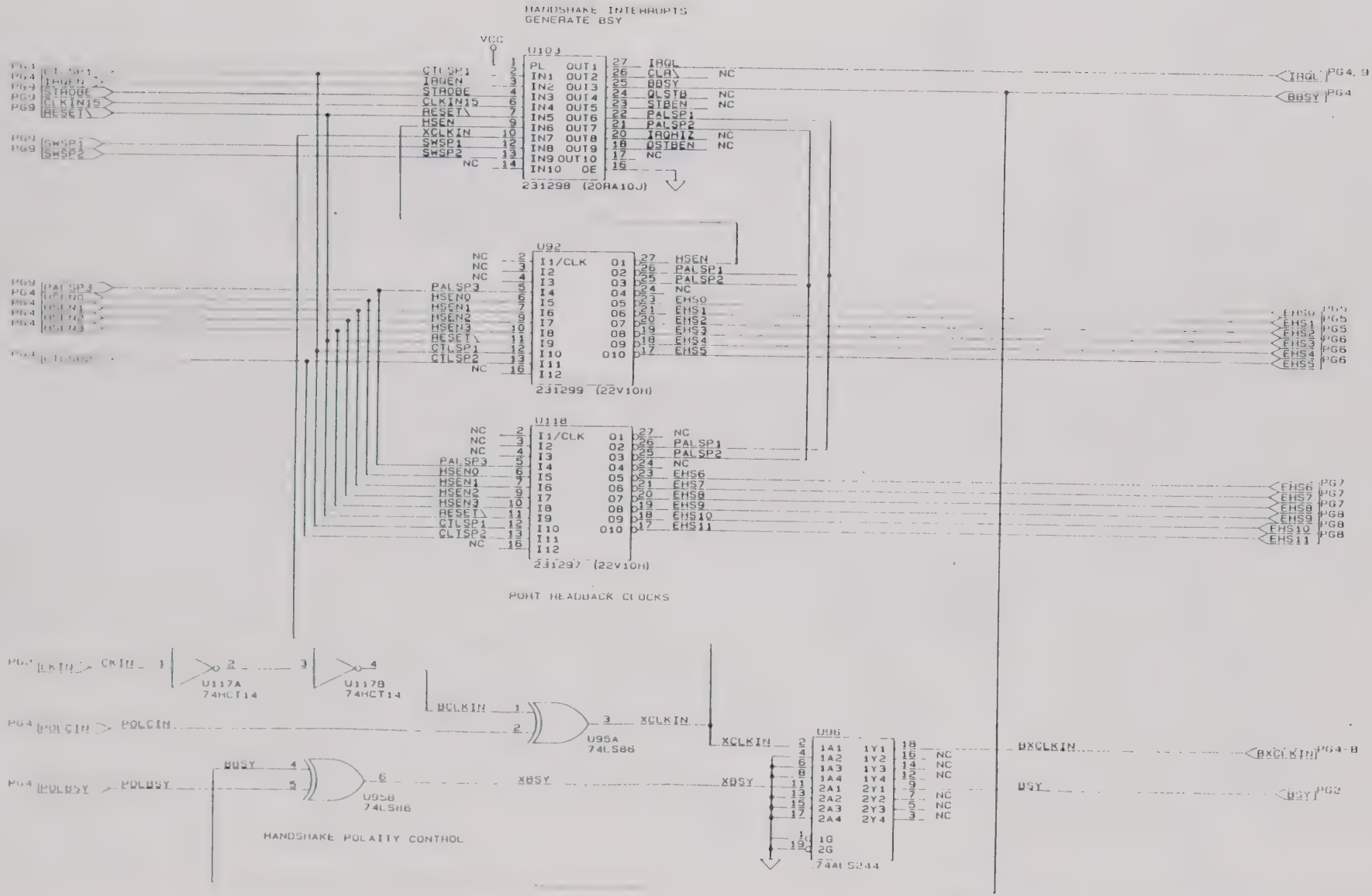

SIZE	CODE IDENT NO	DOCUMENT NO	REV
B	21793	4331980	A
SCALE		SHEET 3 OF 11	

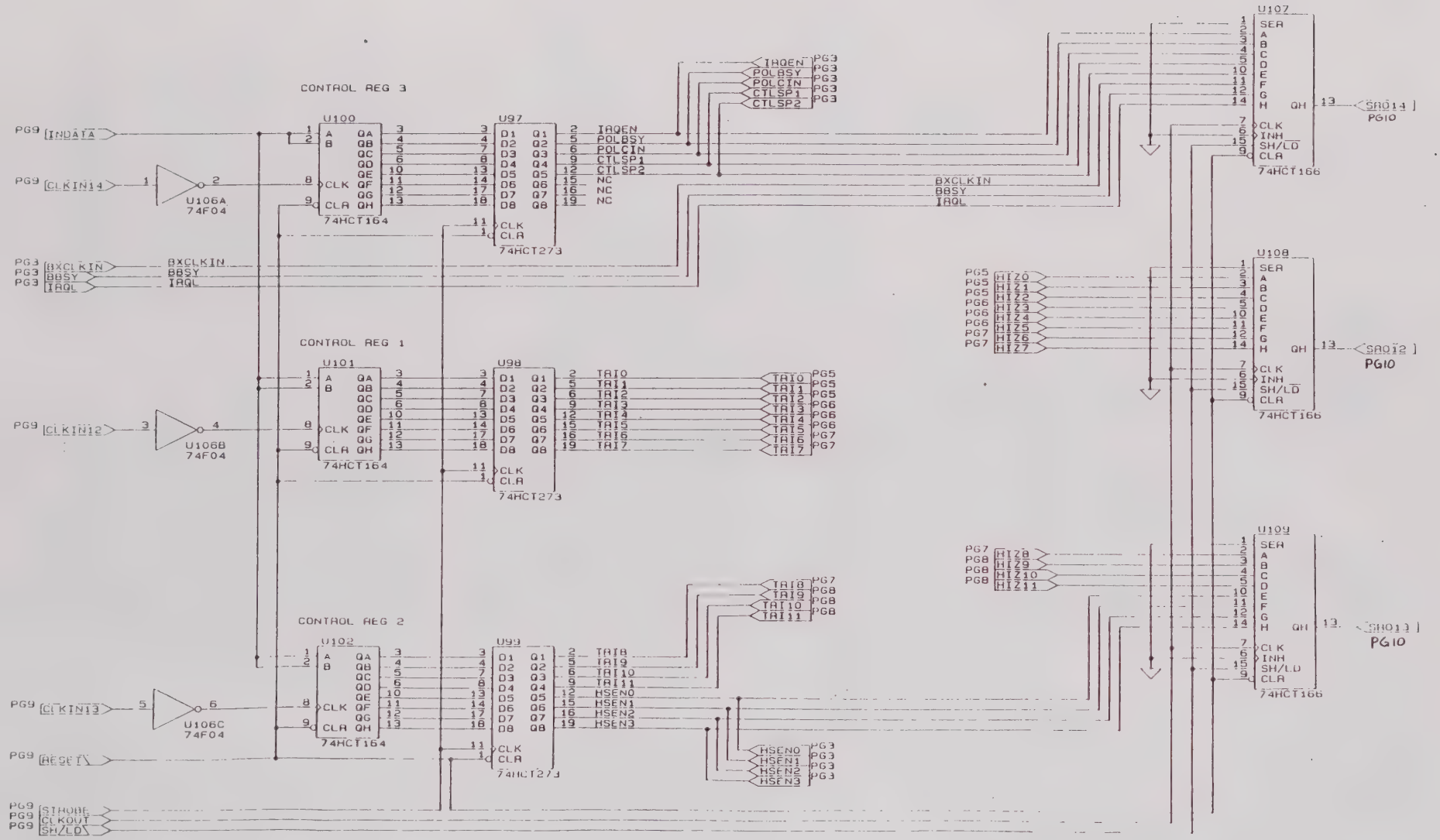

SIZE	CODE IDENT NO	DOCUMENT NO	REV
B	21793	431980	A
SCALE		SHEET 4 OF 14	

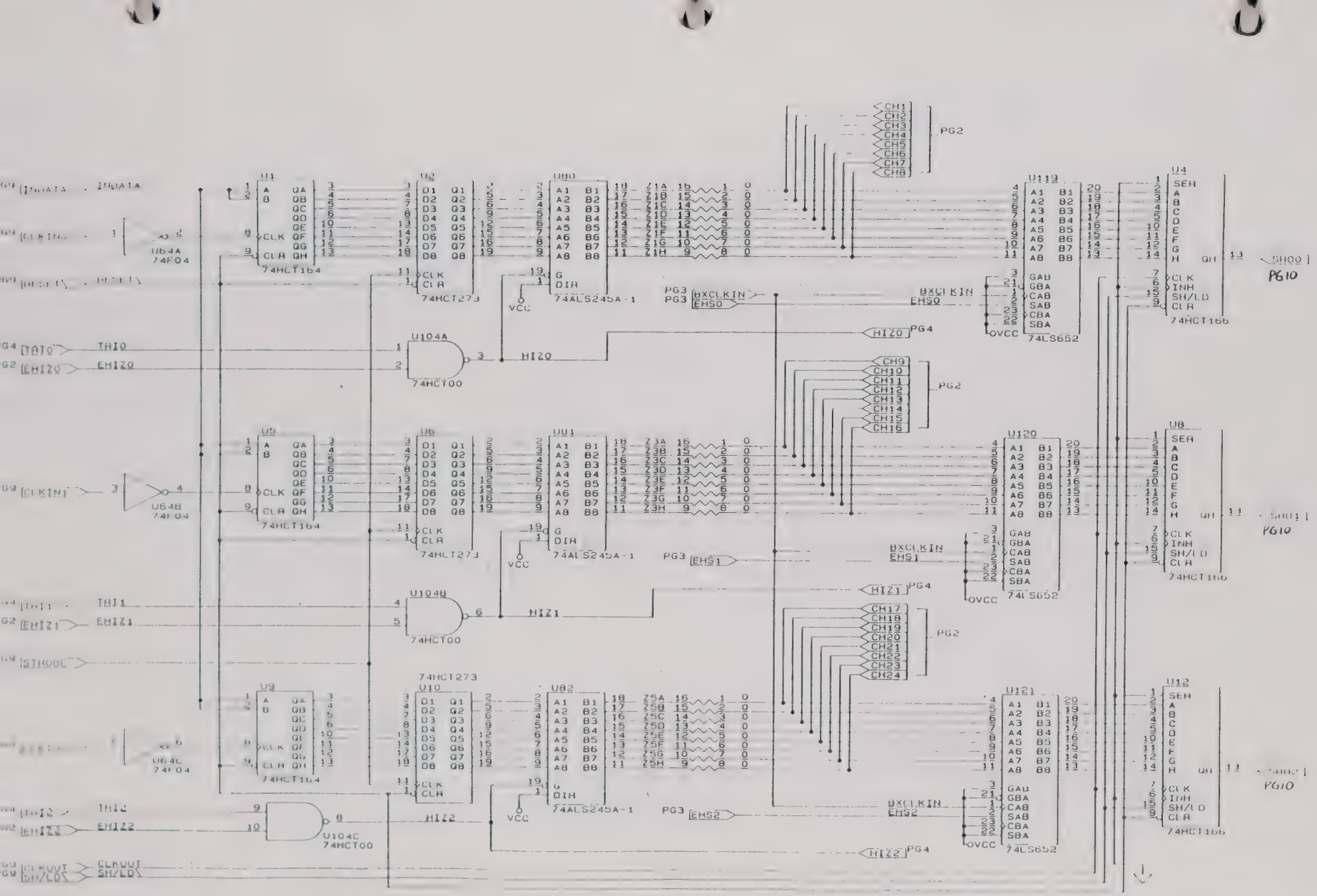

SIZE	CODE IDENT NO	DOCUMENT NO	REV
B	21793	431980	A
SCALE		SHEET 5 OF 14	

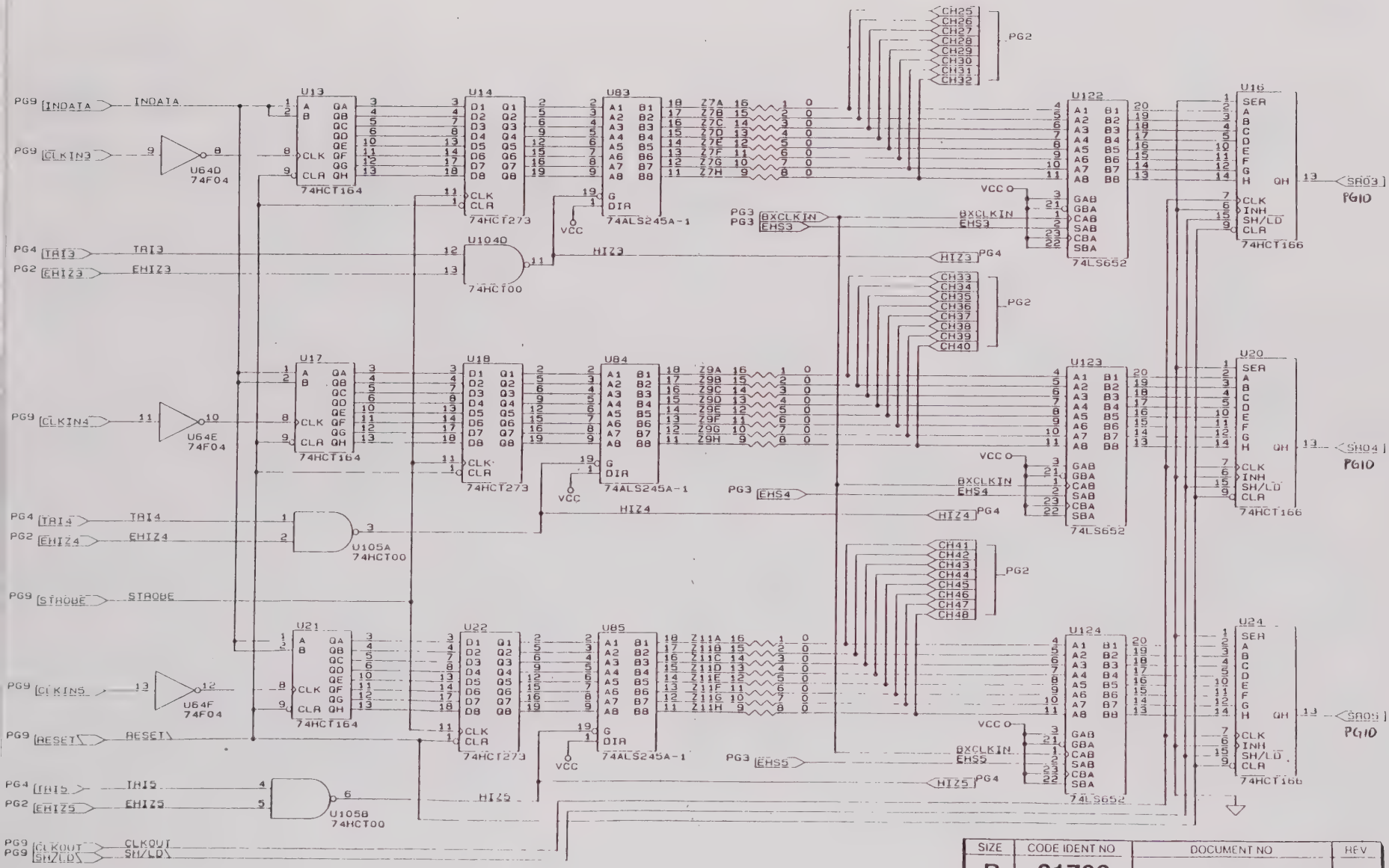
PG9 INDATA
INDATA
PG9 CLKIN3
U64D 74F04
PG4 TRI3
PG2 EHIZ3
TRI3
EHIZ3
U13
74HCT164
U14
74HCT273
U83
74ALS245A-1
U104D
74HCT00
HIZ3
U122
74LS652
U16
74HCT166
SR03
PG10
CH25 CH26 CH27 CH28 CH29 CH30 CH31 CH32
PG2
PG3 BXCLKIN
PG3 EHS3
VCC
PG9 CLKIN4
U64E 74F04
PG4 TRI4
PG2 EHIZ4
TRI4
EHIZ4
U17
74HCT164
U18
74HCT273
U84
74ALS245A-1
U105A 74HCT00
HIZ4
U123
74LS652
U20
74HCT166
SR04
PG10
CH33 CH34 CH35 CH36 CH37 CH38 CH39 CH40
PG3 EHS4
PG9 STROBE
STROBE
PG9 CLKIN5
U64F 74F04
PG4 TRI5
PG2 EHIZ5
TRI5
EHIZ5
U21
74HCT164
U22
74HCT273
U85
74ALS245A-1
U105B 74HCT00
HIZ5
U124
74LS652
U24
74HCT166
SR05
PG10
CH41 CH42 CH43 CH44 CH45 CH46 CH47 CH48
PG3 EHS5
PG9 RESET
PG9 CLKOUT
PG9 SH/LD
BXCLKIN
EHS3
EHS4
EHS5
HIZ3
HIZ4
HIZ5
SIZE B
CODE IDENT NO 21793
DOCUMENT NO 431980
REV A
SCALE
SHEET 6 OF 14

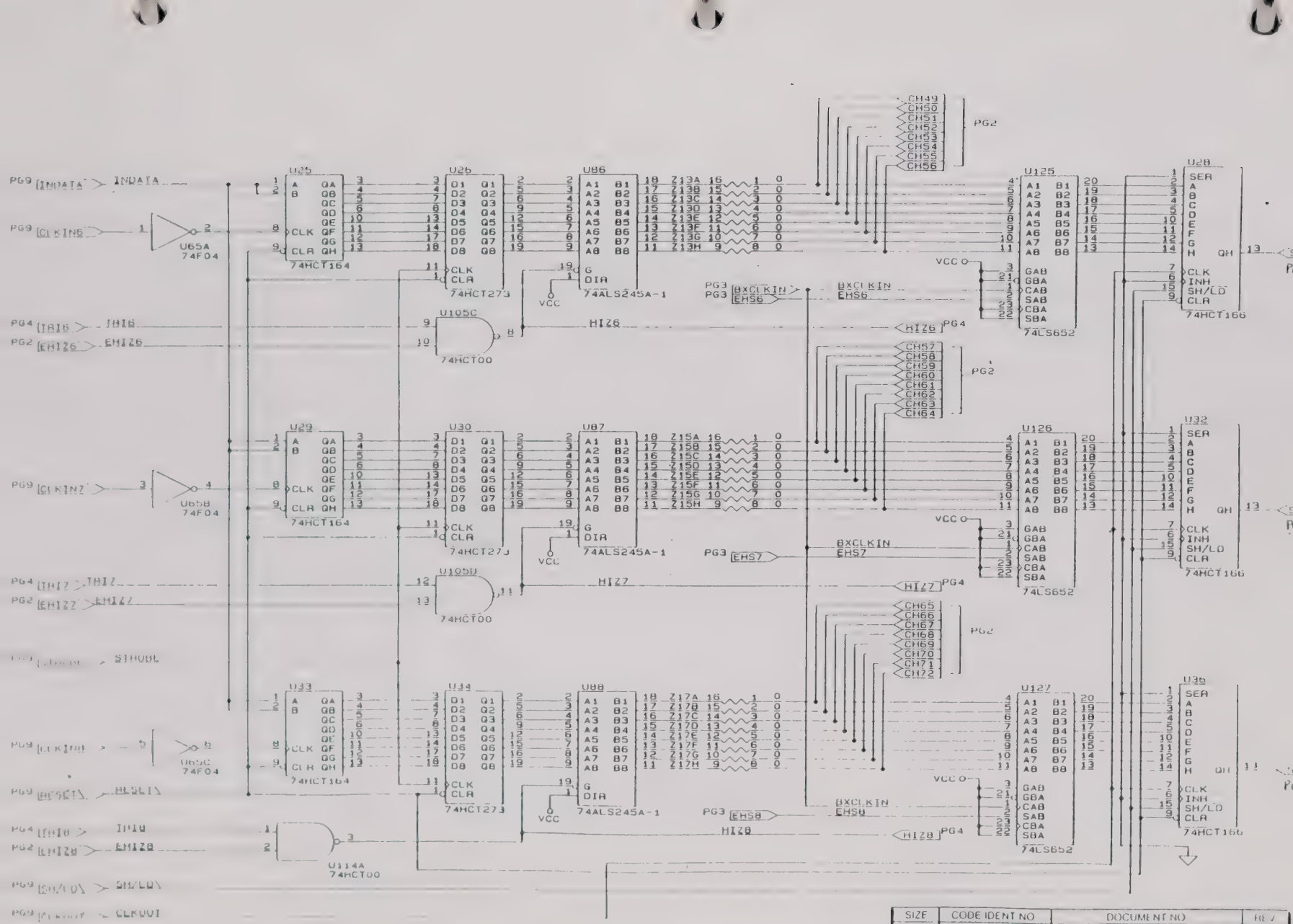

SIZE	CODE IDENT NO	DOCUMENT NO	REV
B	21793	431980	A
SCALE		SHEET 7 OF 14	

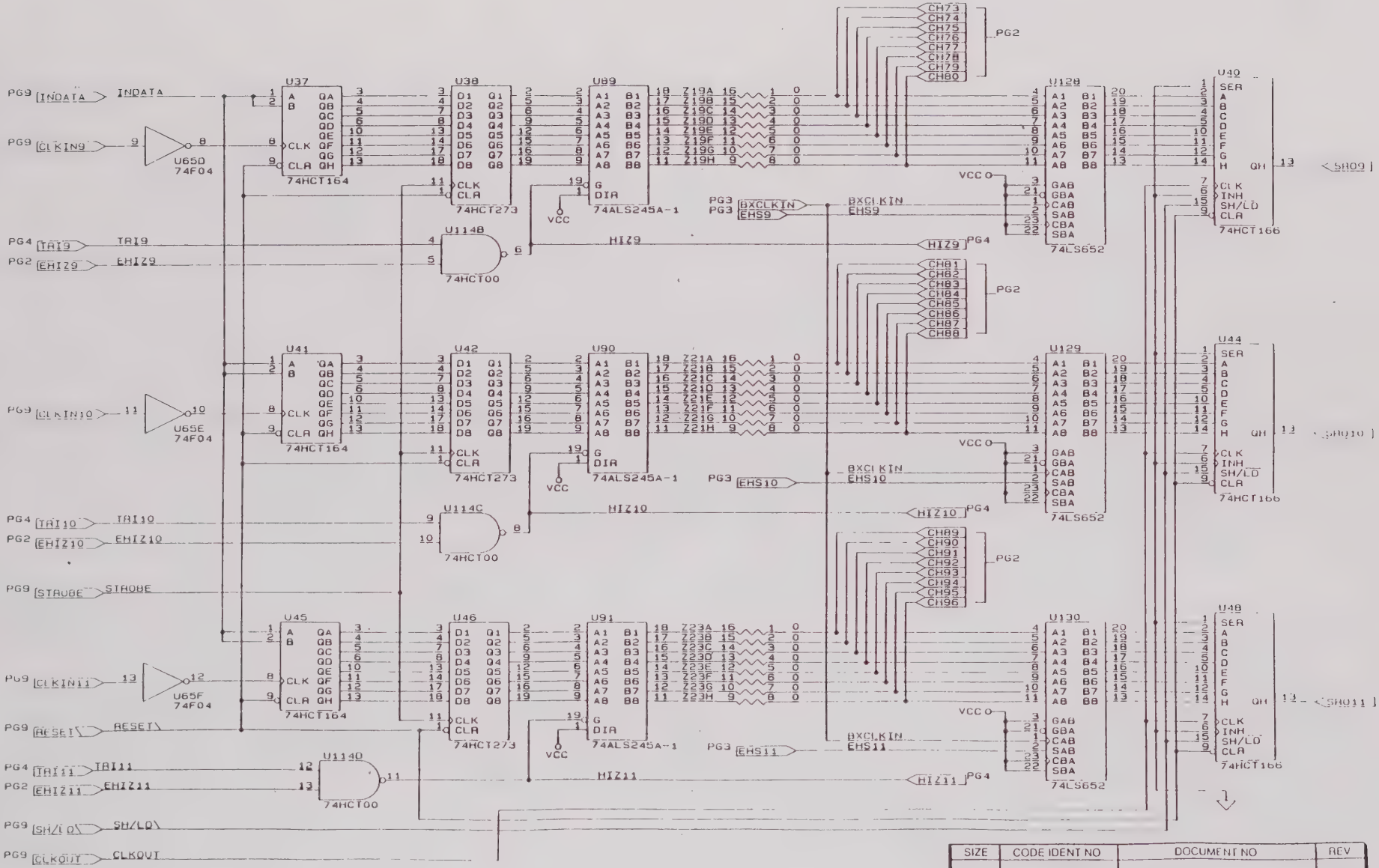

SIZE	CODE IDENT NO	DOCUMENT NO	REV
B	21793	131980	A
SCALE		SHEET 8 OF 14	

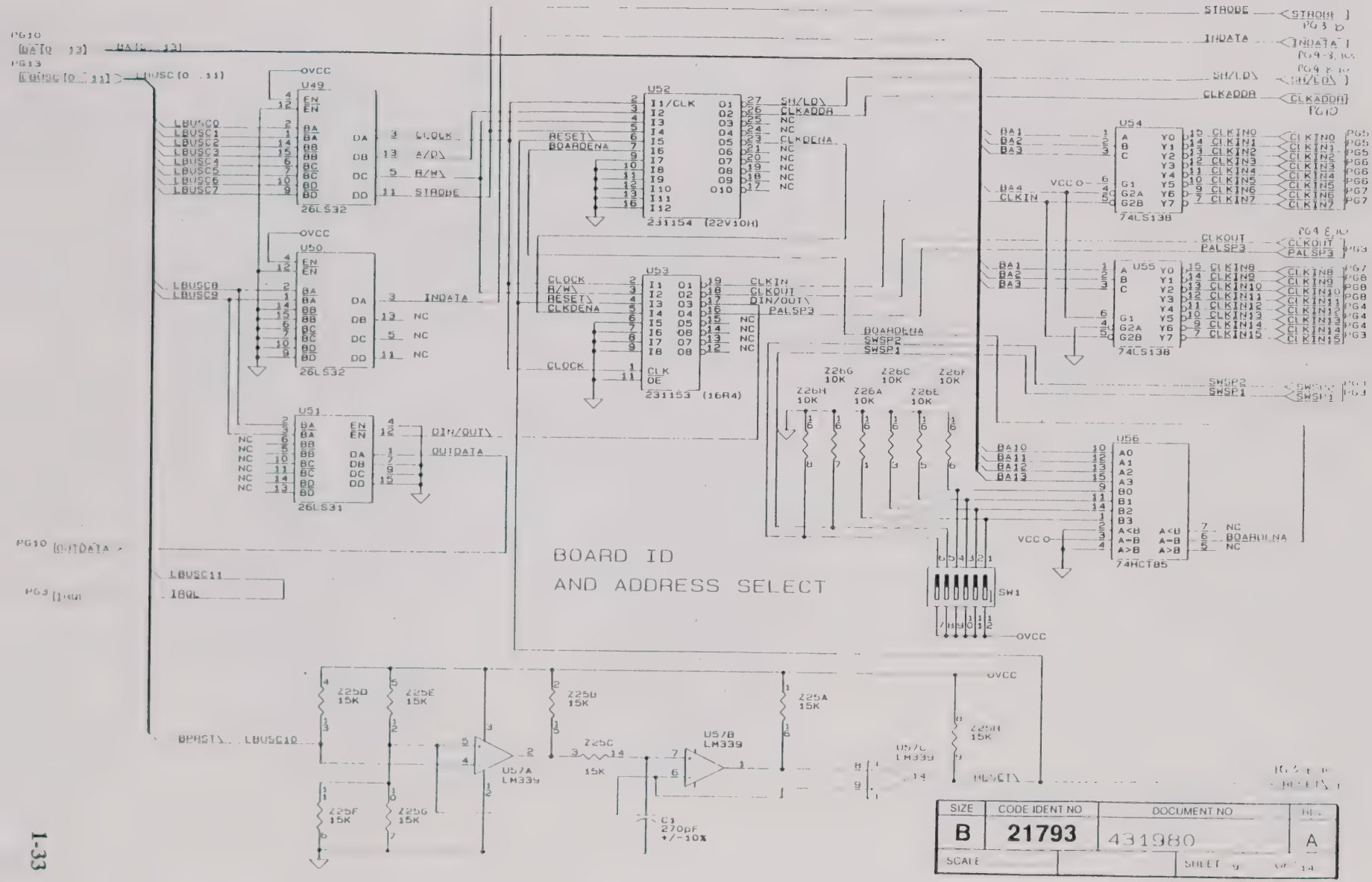

SIZE	CODE IDENT NO	DOCUMENT NO	REV
B	21793	431980	A
SCALE		SHEET	

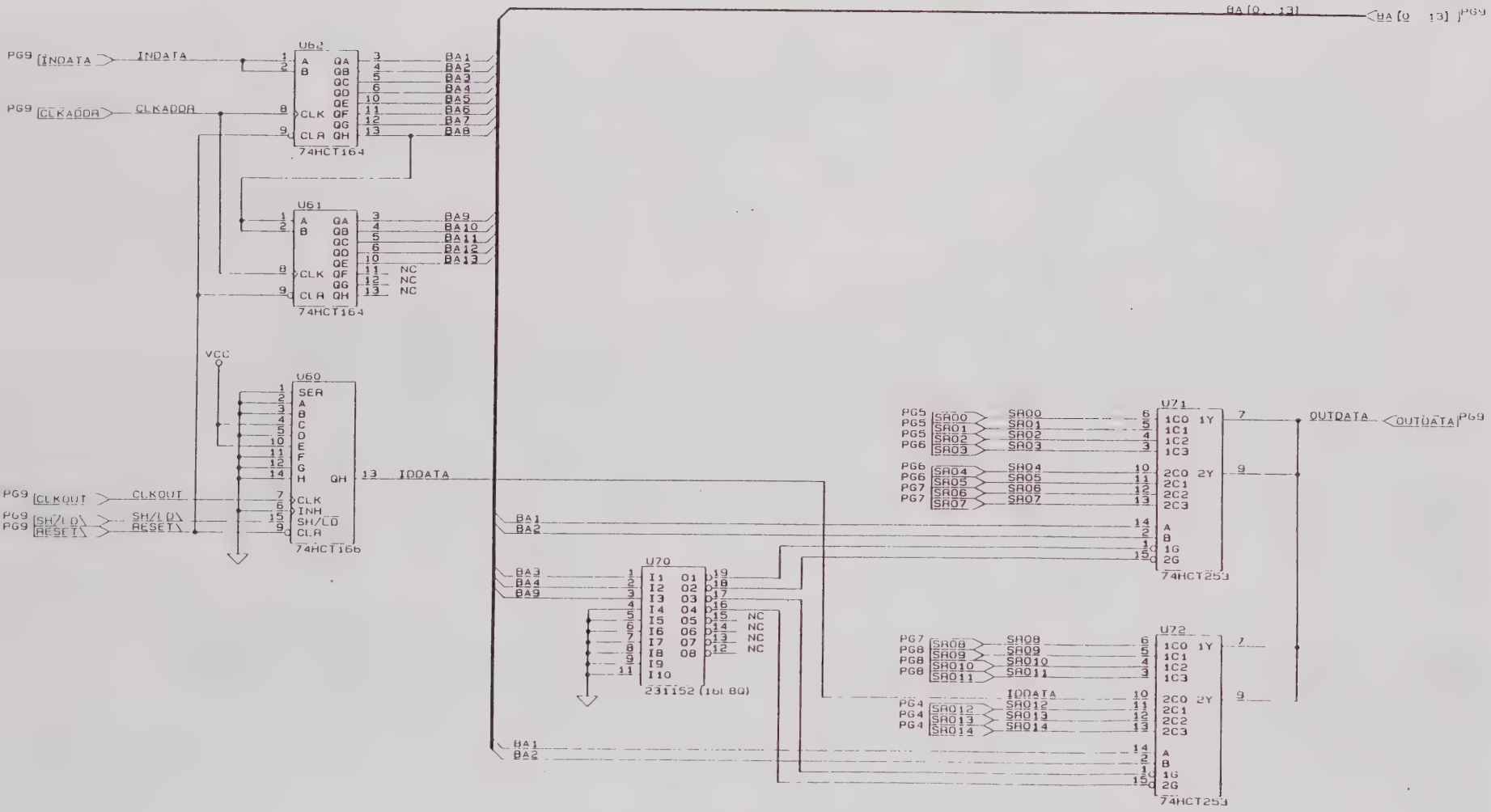

SIZE	CODE IDENT NO	DOCUMENT NO	REV
B	21793	431980	A
SCALE		SHEET 10 OF 14	

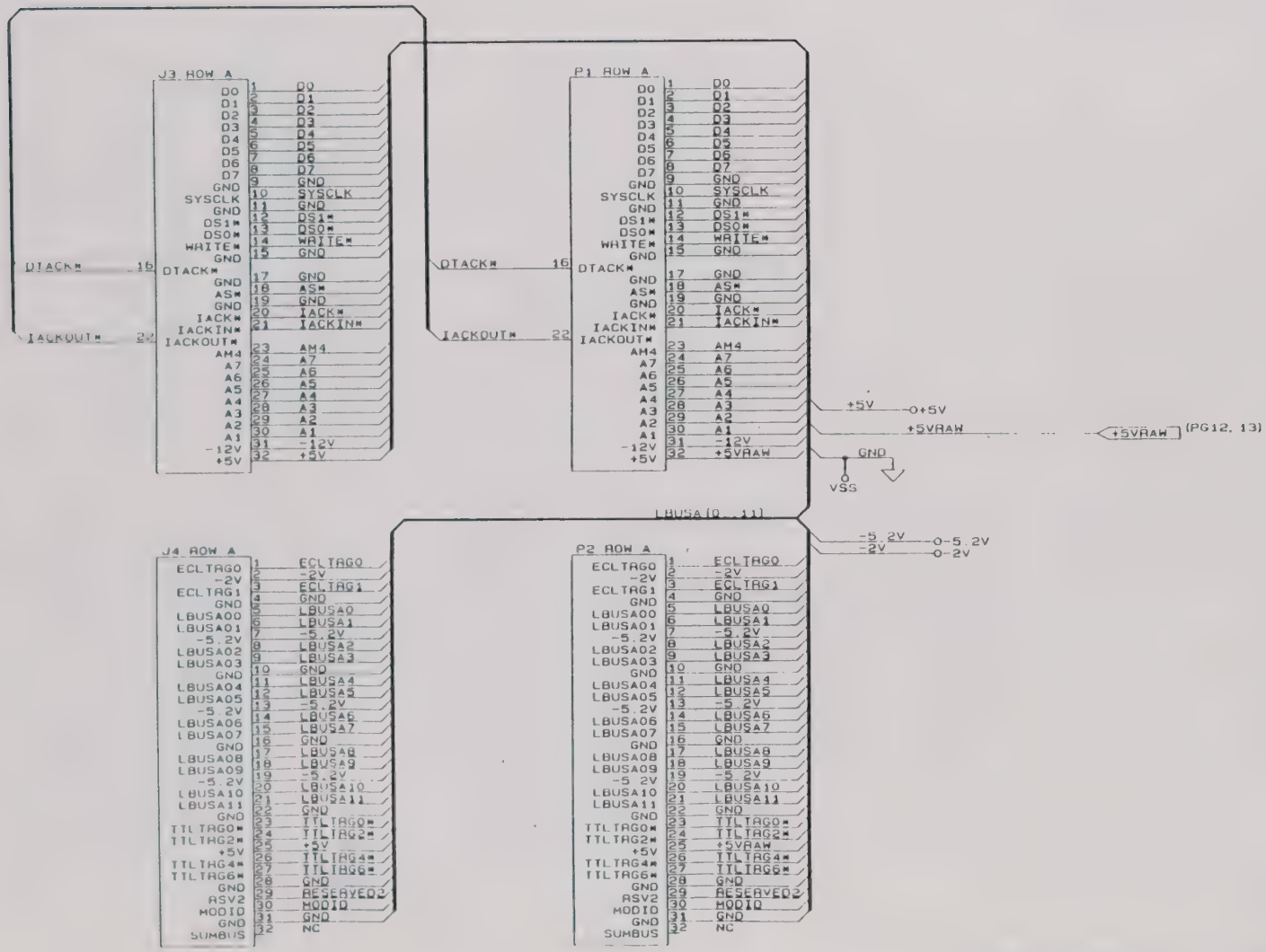

SIZE	CODE IDENT NO	DOCUMENT NO	REV
B	21793	431980	A
SCALE		SHEET 11 OF 14	

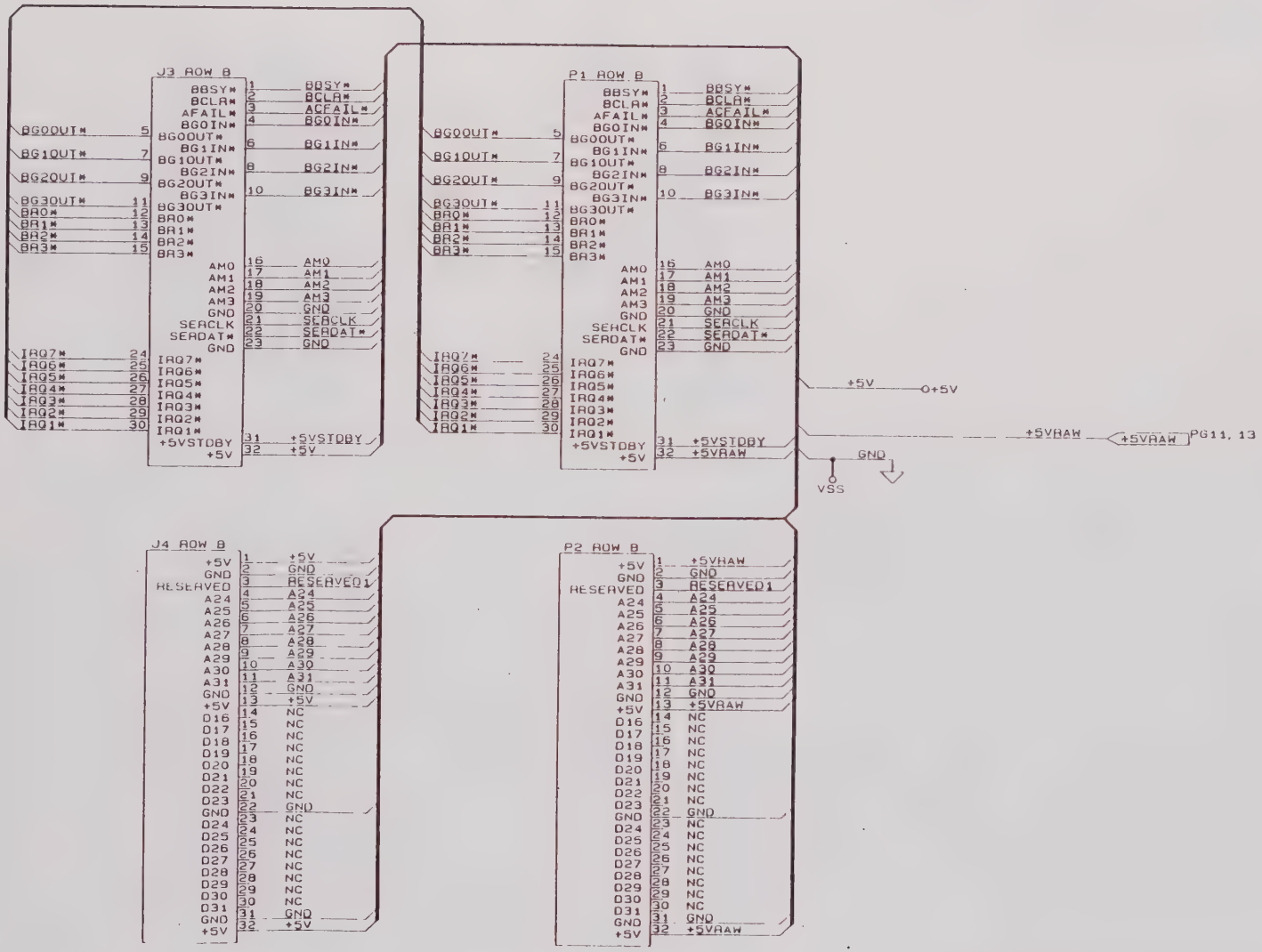

SIZE	CODE IDENT NO	DOCUMENT NO	REV
B	21793	431980	A
SCALE		SHEET 12 OF 14	

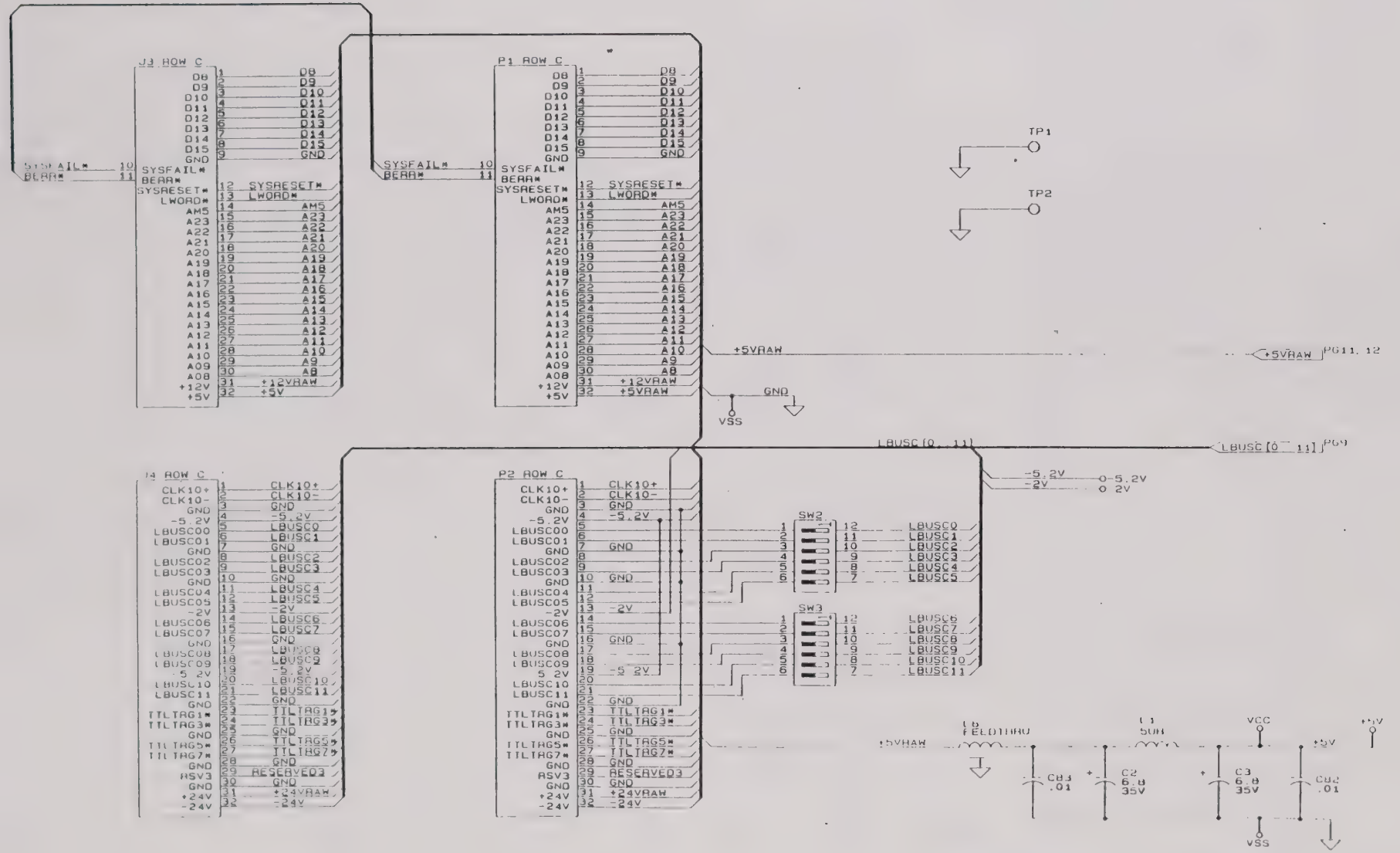

SIZE	CODE IDENT NO	DOCUMENT NO	REV
B	21793	431980	A
SCALE		SHEET 13 OF 14	

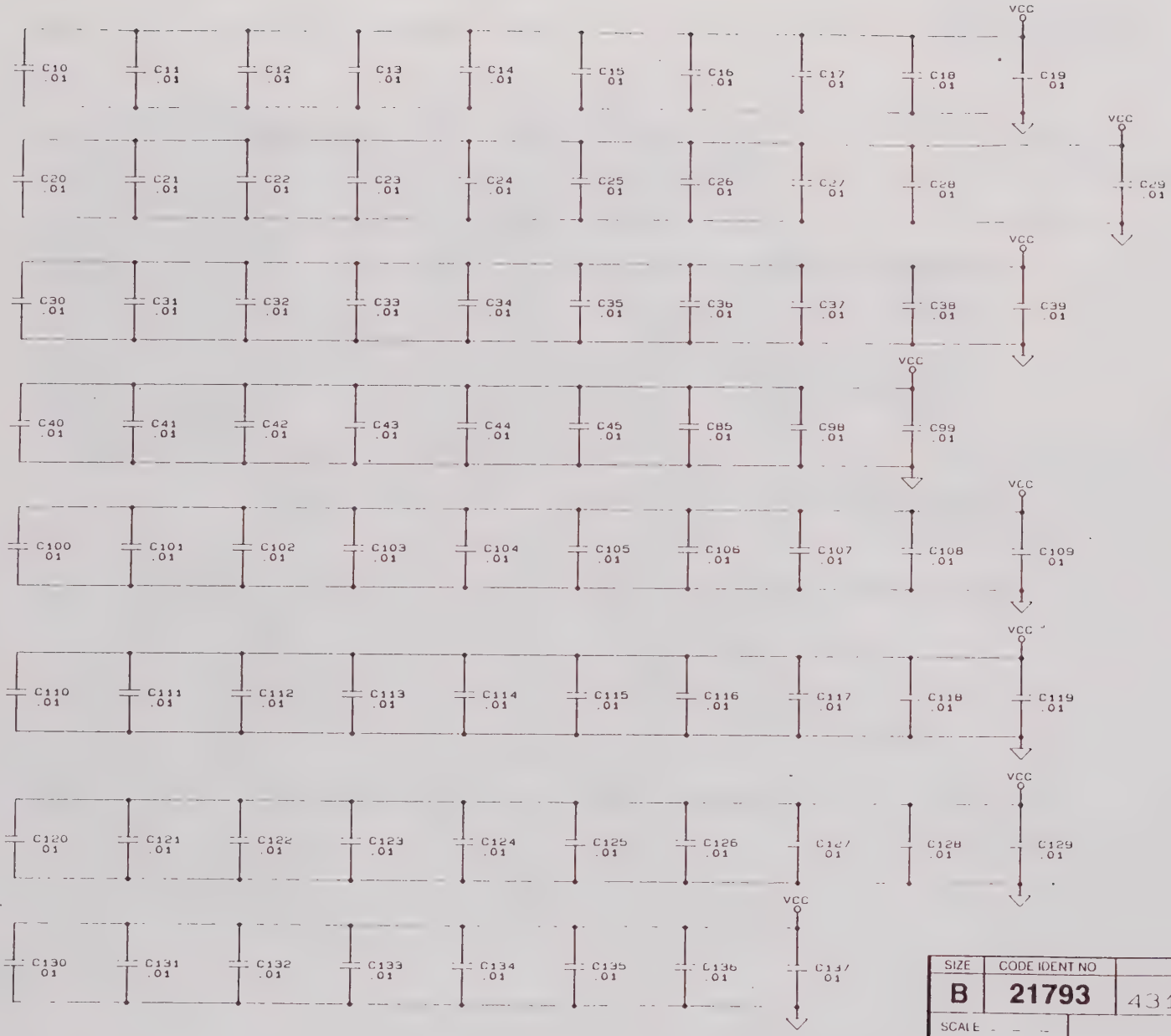

SIZE	CODE IDENT NO	DOCUMENT NO	REV
B	21793	431980	A
SCALE - - -		SHEET 14 OF 14	

404916 FINAL ASSY., 1260-14

REF DESIG	RACAL-DANA P/N	DESCRIPTION	FSC	MANUFACTURER'S P/N
{1}1	401980	PCB ASSY., 1260-14	21793	401980
{3}1	404936	SHIPPING KIT, 1260-14	21793	404936
{5}1	455901	PANEL, SIDE, RIGHT	21793	455901
{6}1	455779-003	PANEL, SIDE, LEFT	21793	455779-003
{9}1	455781	PANEL, REAR, SINGLE	21793	455781
{10}1	455784-001	PANEL, VXI TOP	21793	455784-001
{11}1	455784-002	PANEL, VXI BOTTOM	21793	455784-002
{14}32	615539	SCREW, PFH, 4-40X. 125	--	--
{16}8	616480	SCREW, PFH, 4-40 X .375	-	-
{18}1	921212-009	LABEL, VXI, 1260-14	21793	921212-009
{19}A/R	920962	LOCTITE, 242, MED STR.	05972	272
{21}1	921059	LABEL, CAUTION, STATIC	21793	921059

404936 SHIPPING KIT, 1260-14, 54

REF DESIG	RACAL-DANA P/N	DESCRIPTION	FSC	MANUFACTURER'S P/N
{1}2	455540	KEY, LOCKOUT, TTL, A/C	21793	455540
{2}2	455541	KEY, LOCKOUT, TTL, A/C	21793	455541
{3}2	455542	KEY, LOCKOUT, TTL, A/C	21793	455542
{5}3	615013	SCREW, PPH, 2-56 X .188	-	-

404974 CABLE ASSY.. KIT , 1260-14

REF DESIG	RACAL-DANA P/N	DESCRIPTION	FSC	MANUFACTURER'S P/N
{1}1	404970	CABLE ASSY.. J101	21793	404970
{2}1	404971	CABLE ASSY.. J102	21793	404971
{3}1	404972	CABLE ASSY.. J104	21793	404972
{4}1	404973	CABLE ASSY.. J103	21793	404973

404970 CABLE ASSY.. 1260-14-J101

REF DESIG	RACAL-DANA P/N	DESCRIPTION	FSC	MANUFACTURER'S P/N
{1}A//R	500292	CABLE. 50 CONDUCTORS. FLAT. TWISTED	53387	1700150
{2}1	601627	CONNECTOR. FLAT CABLE. RECEPTACLE. 50P	53387	3425-6050
{4}A/R	M2305351134	INSULATION ELECTRICAL HEAT SHRINK	81349	M23053/5-113-4
{5}A/R	LT100 1INCH	TAPE POLYESTER	34359	853. 1 INCH

404971 CABLE ASSY.. 1260-14-J102

REF DESIG	RACAL-DANA P/N	DESCRIPTION	FSC	MANUFACTURER'S P/N
{1}2	500292	CABLE. 50 CONDUCTORS. FLAT. TWISTED	53387	1700150
{2}1	601627	CONNECTOR. FLAT CABLE. RECEPTACLE. 50P	53387	3425-6050
{4}A/R	M2305351134	INSULATION ELECTRICAL HEAT SHRINK	81349	M23053/5-113-4
{5}A/R	LT100 1INCH	TAPE POLYESTER	34359	853. 1 INCH

404973 CABLE ASSY., 1260-14,J103

REF DESIG	RACAL-DANA P/N	DESCRIPTION	FSC	MANUFACTURER'S P/N
{1}A/R	500300	CABLE, 60 CONDUCTOR FLAT, TWISTED	52072	CA-60IDC-TF
{2}1	601457	CONNECTOR, FLAT CABLE, 60-PIN	52072	CA-60IDS2-F-SR
{4}A/R	M2305351134	INSULATION ELECTRICAL, HEAT SHRINK	81349	M23053/5-113-4
{5}A/R	LT100 1INCH	TAPE, POLYESTER	34359	853, 1INCH

404972 CABLE ASSY., 1260-14, J104

REF DESIG	RACAL-DANA P/N	DESCRIPTION	FSC	MANUFACTURER'S P/N
{1}A/R	500300			
{2}1	601457	CONNECTOR, FLAT CABLE, 60-PIN	52072	CA-60IDS2-F-SR
{4}A/R	M2305351134	INSULATION ELECTRICAL HEAT SHRINK	81349	M23053/5-113-4
{5}A/R	LT100 1INCH	TAPE POLYESTER	34359	853, 1 INCH

401980 PCB ASSY.. 1260-14

REF DESIG	RACAL-DANA P/N	DESCRIPTION	FSC	MANUFACTURER'S P/N
C1	130177	CAPACITOR, CHIP, SMD, 270PF	95275	VJ1206A271KXAMT
C2	110125	CAP, TANTA, 6.8UF, 35V, 20 PERCENT	05397	T355F685M035A5
C3	110126	CAP, TANTA, 6.8UF, 35V, 20 PERCENT	05397	T355F685M035A5
C10-C45	R-21-1801	CAP, CHIP, 10 NF	95275	VJ1206Y103MF
C82	R-21-1801	CAP, CHIP, 10 NF	95275	VJ1206Y103MF
C83	R-21-1801	CAP, CHIP, 10 NF	95275	VJ1206Y103MF
C85	R-21-1801	CAP, CHIP, 10 NF	95275	VJ1206Y103MF
C98	R-21-1801	CAP, CHIP, 10 NF	95275	VJ1206Y103MF
C99	R-21-1801	CAP, CHIP, 10 NF	95275	VJ1206Y103MF
C100-C137	R-21-1801	CAP, CHIP, 10 NF	95275	VJ1206Y103MF
J1	601987	CONNECTOR, IDC PLUG, 50P	53387	4650-6300
J2	601987	CONNECTOR, IDC PLUG, 50P	53387	4650-6300
J3	601925	CONNECTOR, PCB, RECEPT, 3 ROW, 96P	52072	618008
J3	601988	CONNECTOR, IDC PLUG, 60P	53387	4660-6300
J4	601925	CONNECTOR, PCB, RECEPT, 3 ROW, 96P	52072	618008
J4	601988	CONNECTOR, IDC PLUG, 60P	53387	4660-6300
L1	310193	CHOKE, SHIELDED, 5UH	91637	IH-5-5-10
L6	100164	CAP, FEED-THRU.800PF, 50V	00779	842448-2
P1	601675-001	CONNECTOR, EUROCARD, 96 PIN (MODIFIED)	21793	601675-001
P2	601675-001	CONNECTOR, EUROCARD, 96 PIN (MODIFIED)	21793	601675-001
P101	601604	CONNECTOR, PCB, PLUG, 50-PIN, STRAIGHT	08261	842-800-571-000
P102	601604	CONNECTOR, PCB, PLUG, 50-PIN, STRAIGHT	08261	842-800-571-000
P103	601169	CONNECTOR, IDC, 60P, BREAKAWAY	55322	TSW-130-07-G-D
P104	601169	CONNECTOR, IDC, 60P, BREAKAWAY	55322	TSW-130-07-G-D
SW1-SW3	601969	SWITCH, DIP 6 POS, LOW PROFILE	65832	K406S
TP1	601197	POST, TEST, .025 SQ	00779	6-87022-6
TP2	601197	POST, TEST, .025 SQ	00779	6-87022-6
U1	231131	IC, DIGITAL, SHIFT REGISTER	18324	PC74HCT164D
U2	231130	IC, DIGITAL, FLIP FLOP	18324	PC74HC273
U4	231120	IC, 8-BIT, PARALLEL/SERIAL OUT S.R.	18324	74HCT166D
U5	231131	IC, DIGITAL, SHIFT REGISTER	18324	PC74HCT164D
U6	231130	IC, DIGITAL, FLIP FLOP	18324	PC74HC273
U8	231120	IC, 8-BIT, PARALLEL/SERIAL OUT S.R.	18324	74HCT166D
U9	231131	IC, DIGITAL, SHIFT REGISTER	18324	PC74HCT164D
U10	231130	IC, DIGITAL, FLIP FLOP	18324	PC74HC273
U12	231120	IC, 8-BIT, PARALLEL/SERIAL OUT S.R.	18324	74HCT166D
U13	231131	IC, DIGITAL, SHIFT REGISTER	18324	PC74HCT164D
U14	231130	IC, DIGITAL, FLIP FLOP	18324	PC74HC273
U16	231120	IC, 8-BIT, PARALLEL/SERIAL OUT S.R.	18324	74HCT166D
U17	231131	IC, DIGITAL, SHIFT REGISTER	18324	PC74HCT164D
U18	231130	IC, DIGITAL, FLIP FLOP	18324	PC74HC273
U20	231120	IC, 8-BIT, PARALLEL/SERIAL OUT S.R.	18324	74HCT166D
U21	231131	IC, DIGITAL, SHIFT REGISTER	18324	PC74HCT164D
U22	231130	IC, DIGITAL, FLIP FLOP	18324	PC74HC273
U24	231120	IC, 8-BIT, PARALLEL/SERIAL OUT S.R.	18324	74HCT166D
U25	231131	IC, DIGITAL, SHIFT REGISTER	18324	PC74HCT164D
U26	231130	IC, DIGITAL, FLIP FLOP	18324	PC74HC273
U28	231120	IC, 8-BIT, PARALLEL/SERIAL OUT S.R.	18324	74HCT166D
U29	231131	IC, DIGITAL, SHIFT REGISTER	18324	PC74HCT164D
U30	231130	IC, DIGITAL, FLIP FLOP	18324	PC74HC273
U32	231120	IC, 8-BIT, PARALLEL/SERIAL OUT S.R.	18324	74HCT166D
U33	231131	IC, DIGITAL, SHIFT REGISTER	18324	PC74HCT164D
U34	231130	IC, DIGITAL, FLIP FLOP	18324	PC74HC273
U36	231120	IC, 8-BIT, PARALLEL/SERIAL OUT S.R.	18324	74HCT166D
U37	231131	IC, DIGITAL, SHIFT REGISTER	18324	PC74HCT164D
U38	231130	IC, DIGITAL, FLIP FLOP	18324	PC74HC273
U40	231120	IC, 8-BIT, PARALLEL/SERIAL OUT S.R.	18324	74HCT166D
U41	231131	IC, DIGITAL, SHIFT REGISTER	18324	PC74HCT164D
U42	231130	IC, DIGITAL, FLIP FLOP	18324	PC74HC273

401980 PCB ASSY., 1260-14

REF DESIG	RACAL-DANA P/N	DESCRIPTION	FSC	MANUFACTURER'S P/N
U44	231120	IIC, 8-BIT, PARALLEL/SERIAL OUT S.R.	18324	74HCT166D
U45	231131	IIC, DIGITAL, SHIFT REGISTER	18324	PC74HCT164D
U46	231130	IIC, DIGITAL, FLIP FLOP	18324	PC74HC273
U48	231120	IIC, 8-BIT, PARALLEL/SERIAL OUT S.R.	18324	74HCT166D
U49	231096	IIC, QUAD DIFF RECEIVER	01295	AM26LS32ACD
U50	231096	IIC, QUAD DIFF RECEIVER	01295	AM26LS32ACD
U51	231125	IIC, DIGITAL, LINE DRIVER	27014	DS26LS31MN
U52	231154	IIC, PROGRAMMED PLA	21793	231154
U53	231153	IIC, PROGRAMMED PLA	21793	231153
U54	231094	IIC, DEMUX DECODER	18324	N74LS138D
U55	231094	IIC, DEMUX DECODER	18324	N74LS138D
U56	231135	IIC, DIGITAL, 4-BIT COMPARATOR	18324	PC74HCT85D
U57	231093	IIC, QUAD COMPARATOR	04713	LM339D
U60	231120	IIC, 8-BIT, PARALLEL/SERIAL OUT S.R.	18324	74HCT166D
U61	231131	IIC, DIGITAL, SHIFT REGISTER	18324	PC74HCT164D
U62	231131	IIC, DIGITAL, SHIFT REGISTER	18324	PC74HCT164D
U64	230973	IIC,HEX INVERTER	07263	74F04SC
U65	230973	IIC,HEX INVERTER	07263	74F04SC
U70	231152	IIC, PROGRAMMED PIA	21793	231152
U71	231147	IIC, MULTIPLEXER	04713	74HC253D
U72	231147	IIC, MULTIPLEXER	04713	74HC253D
U80-U90	231073	IIC, DIGITAL, RECEIVER	01295	SN74ALS64SA-1N
U92	231299	IIC, MODE SELECT PAL	21793	231299
U95	230414	IIC,QUAD 2-INPUT "EXCLUSIVE OR"GATES	01295	74LS86
U96	230963	IIC, DIGITAL BUFFER	01295	SN74ALS244N
U97-U99	231130	IIC, DIGITAL, FLIP FLOP	18324	PC74HC273
U100-U102	231131	IIC, DIGITAL, SHIFT REGISTER	18324	PC74HCT164D
U103	231298	IIC, HANDSHAKE PAL	21793	231298
U104	230796	IIC, QUAD 2-INPUT NAND GATE	02735	74HCT00E
U105	230796	IIC, QUAD 2-INPUT NAND GATE	02735	74HCT00E
U106	230973	IIC,HEX INVERTER	07263	74F04SC
U107-U109	231120	IIC, 8-BIT, PARALLEL/SERIAL OUT S.R.	18324	74HCT166D
U114	230796	IIC, QUAD 2-INPUT NAND GATE	02735	74HCT00E
U117	231143	IIC, HEX INVERTER	18324	74HCT14N
U118	231297	IIC, PAL	21793	231297
U119-U130	230936	IIC, OCTAL BUS TRNCVRS & REGISTRS	01295	SN74LS652NT
Z1	080134	IRES NETWORK, DIPSHUNT, 1 OHM, 16P8R	11236	198DM8-5555555
Z3	080134	IRES NETWORK, DIPSHUNT, 1 OHM, 16P8R	11236	198DM8-5555555
Z5	080134	IRES NETWORK, DIPSHUNT, 1 OHM, 16P8R	11236	198DM8-5555555
Z7	080134	IRES NETWORK, DIPSHUNT, 1 OHM, 16P8R	11236	198DM8-5555555
Z9	080134	IRES NETWORK, DIPSHUNT, 1 OHM, 16P8R	11236	198DM8-5555555
Z11	080134	IRES NETWORK, DIPSHUNT, 1 OHM, 16P8R	11236	198DM8-5555555
Z13	080134	IRES NETWORK, DIPSHUNT, 1 OHM, 16P8R	11236	198DM8-5555555
Z15	080134	IRES NETWORK, DIPSHUNT, 1 OHM, 16P8R	11236	198DM8-5555555
Z17	080134	IRES NETWORK, DIPSHUNT, 1 OHM, 16P8R	11236	198DM8-5555555
Z19	080134	IRES NETWORK, DIPSHUNT, 1 OHM, 16P8R	11236	198DM8-5555555
Z21	080134	IRES NETWORK, DIPSHUNT, 1 OHM, 16P8R	11236	198DM8-5555555
Z23	080134	IRES NETWORK, DIPSHUNT, 1 OHM, 16P8R	11236	198DM8-5555555
Z25	080114	IRES NETWORK, 16P8R, 15K	73138	628-AL-153J
Z26	080120	IRES NETWORK, 10K	11236	767-161R10K
Z30	080020	IRES NETWORK, 8P7R, 10K, 2 PERCENT	11236	750-81-R10K
Z31	080020	IRES NETWORK, 8P7R, 10K, 2 PERCENT	11236	750-81-R10K
{54}1	401951	IPCB ASSY., LBUS JUMPER	21793	401951
{56}1	411980	IPCB 1260-14 (UNLOADED)	21793	411980
{59}1	455776	IPANEL, FRONT, 1260-14	21793	455776
{62}A/R	500253	ICABLE, FLAT RIBBON, 60 COND	53387	3365/60
{63}A/R	500272	ICABLE, FLAT, RIBBON, 50 CONDUCTOR, 28GA	70903	9L28050
{70}12	601606	ISOCKET, IC, 24-PIN, LOW PROFILE	00779	641933-4
{71}13	601632	ICONNECTOR, DIP, RECEPTACLE, 20P	00779	641612-4

401980 PCB ASSY.. 1260-14

REF DESIG	RACAL-DANA P/N	DESCRIPTION	FSC	MANUFACTURER'S P/N
{76}2	601966	CONNECTOR, CABLE, FLAT, 50 PIN	53387	3334-6000
{78}2	601985	CONNECTOR, IDC SOCKET, 50P	53387	3425-6000
{83}4	611258-001	STANDOFF, SWAGE 4-40 X .170	06540	8091-118-B-440-28
{84}1	611264	HANDLE, EXTRACTOR, BOTTOM	62559	20817-327
{85}1	611265	HANDLE, EXTRACTOR, TOP	62559	20817-328
{86}5	611266	MOUNTING HARDWARE, HANDLE	62559	21100-745
{89}8	615545	SCREW, PFH, 4-40 X .500	-	-
{91}2	616405	SCREW, PFH, M2.5-.45 X 12	-	-
{93}8	617016	NUT, HEX, 4-40	---	---
{94}8	617102	WASHER, FLAT, #4, LIGHT SERIES	-	-
{95}8	617127	WASHER, LOCK, #4, LIGHT SERIES	-	-
{97}A/R	920962	LOCTITE, 242, MED STR.	05972	272
{98}1	921148	LABEL SET, VXI-VME	21793	921148

404916-001 FINAL ASSY., 1260-14, OPT. 14

REF DESIG	RACAL-DANA P/N	DESCRIPTION	FSC	MANUFACTURER'S P/N
{1}1	401980-001	PCB ASSY., 1260-14, OPT. 14	21793	401980-001
{3}1	404936	SHIPPING KIT, 1260-14	21793	404936
{5}1	455901	PANEL, RIGHT SIDE	21793	455901
{6}1	455779-003	PANEL, SIDE, LEFT	21793	455779-003
{9}1	455781	PANEL, REAR, SINGLE	21793	455781
{10}1	455784-001	PANEL, VXI TOP	21793	455784-001
{11}1	455784-002	PANEL, VXI BOTTOM	21793	455784-002
{14}32	615539	SCREW, PFH, 4-40X, 125	-	-
{16}8	616480	SCREW, PFH, 4-40 X .375	-	-
{17}1	920710	LABEL, IDENIFICATION	21793	920710
{18}1	921212-009	LABEL, VXI, 1260-14	21793	921212-009
{19}A/R	920962	LOCTITE, 242, MED STR.	05972	272
{21}1	921059	LABEL, CAUTION, STATIC	21793	921059

401980-001 PCB ASSY., 1260-14, OPT. 14

REF DESIG	RACAL-DANA P/N	DESCRIPTION	FSC	MANUFACTURER'S P/N
C1	130177	CAPACITOR, CHIP, SMD, 270PF	95275	VJ1206A271KXAMT
C2	110126	CAP, TANTA, 6.8UF, 35V, 20 PERCENT	05397	T355F685M035A5
C3	110126	CAP, TANTA, 6.8UF, 35V, 20 PERCENT	05397	T355F685M035A5
C10-C45	R-21-1801	CAP, CHIP, 10 NF	95275	VJ1206Y103MF
C82	R-21-1801	CAP, CHIP, 10 NF	95275	VJ1206Y103MF
C83	R-21-1801	CAP, CHIP, 10 NF	95275	VJ1206Y103MF
C85	R-21-1801	CAP, CHIP, 10 NF	95275	VJ1206Y103MF
C98	R-21-1801	CAP, CHIP, 10 NF	95275	VJ1206Y103MF
C99	R-21-1801	CAP, CHIP, 10 NF	95275	VJ1206Y103MF
C100-C137	R-21-1801	CAP, CHIP, 10 NF	95275	VJ1206Y103MF
J1	601987	CONNECTOR, IDC PLUG, 50P	53387	4650-6300
J2	601987	CONNECTOR, IDC PLUG, 50P	53387	4650-6300
J3	601925	CONNECTOR, PCB, RECEPT, 3 ROW, 96P	52072	618008
J3	601988	CONNECTOR, IDC PLUG, 60P	53387	4660-6300
J4	601925	CONNECTOR, PCB, RECEPT, 3 ROW, 96P	52072	618008
J4	601988	CONNECTOR, IDC PLUG, 60P	53387	4660-6300
L1	310193	CHOKE, SHIELDED, 5UH	91637	IH-5-5-10
L6	100164	CAP, FEED-THRU,800PF, 50V	00779	842448-2
P1	601675-001	CONNECTOR, EUROCARD, 96 PIN (MODIFIED)	21793	601675-001
P2	601675-001	CONNECTOR, EUROCARD, 96 PIN (MODIFIED)	21793	601675-001
P101	601604	CONNECTOR, PCB, PLUG, 50-PIN, STRAIGHT	08261	842-800-571-000
P102	601604	CONNECTOR, PCB, PLUG, 50-PIN, STRAIGHT	08261	842-800-571-000
P103	601169	CONNECTOR, IDC, 60P, BREAKAWAY	55322	TSW-130-07-G-D
P104	601169	CONNECTOR, IDC, 60P, BREAKAWAY	55322	TSW-130-07-G-D
SW1-SW3	601969	SWITCH, DIP 6 POS, LOW PROFILE	65832	K406S
TP1	601197	POST, TEST, .025 SQ	00779	6-87022-6
TP2	601197	POST, TEST, .025 SQ	00779	6-87022-6
U1	231131	IC, DIGITAL, SHIFT REGISTER	18324	PC74HCT164D
U2	231130	IC, DIGITAL, FLIP FLOP	18324	PC74HC273
U4	231120	IC, 8-BIT, PARALLEL/SERIAL OUT S.R.	18324	74HCT166D
U5	231131	IC, DIGITAL, SHIFT REGISTER	18324	PC74HCT164D
U6	231130	IC, DIGITAL, FLIP FLOP	18324	PC74HC273
U8	231120	IC, 8-BIT, PARALLEL/SERIAL OUT S.R.	18324	74HCT166D
U9	231131	IC, DIGITAL, SHIFT REGISTER	18324	PC74HCT164D
U10	231130	IC, DIGITAL, FLIP FLOP	18324	PC74HC273
U12	231120	IC, 8-BIT, PARALLEL/SERIAL OUT S.R.	18324	74HCT166D
U13	231131	IC, DIGITAL, SHIFT REGISTER	18324	PC74HCT164D
U14	231130	IC, DIGITAL, FLIP FLOP	18324	PC74HC273
U16	231120	IC, 8-BIT, PARALLEL/SERIAL OUT S.R.	18324	74HCT166D
U17	231131	IC, DIGITAL, SHIFT REGISTER	18324	PC74HCT164D
U18	231130	IC, DIGITAL, FLIP FLOP	18324	PC74HC273
U20	231120	IC, 8-BIT, PARALLEL/SERIAL OUT S.R.	18324	74HCT166D
U21	231131	IC, DIGITAL, SHIFT REGISTER	18324	PC74HCT164D
U22	231130	IC, DIGITAL, FLIP FLOP	18324	PC74HC273
U24	231120	IC, 8-BIT, PARALLEL/SERIAL OUT S.R.	18324	74HCT166D
U25	231131	IC, DIGITAL, SHIFT REGISTER	18324	PC74HCT164D
U26	231130	IC, DIGITAL, FLIP FLOP	18324	PC74HC273
U28	231120	IC, 8-BIT, PARALLEL/SERIAL OUT S.R.	18324	74HCT166D
U29	231131	IC, DIGITAL, SHIFT REGISTER	18324	PC74HCT164D
U30	231130	IC, DIGITAL, FLIP FLOP	18324	PC74HC273
U32	231120	IC, 8-BIT, PARALLEL/SERIAL OUT S.R.	18324	74HCT166D
U33	231131	IC, DIGITAL, SHIFT REGISTER	18324	PC74HCT164D
U34	231130	IC, DIGITAL, FLIP FLOP	18324	PC74HC273
U36	231120	IC, 8-BIT, PARALLEL/SERIAL OUT S.R.	18324	74HCT166D
U37	231131	IC, DIGITAL, SHIFT REGISTER	18324	PC74HCT164D
U38	231130	IC, DIGITAL, FLIP FLOP	18324	PC74HC273
U40	231120	IC, 8-BIT, PARALLEL/SERIAL OUT S.R.	18324	74HCT166D
U41	231131	IC, DIGITAL, SHIFT REGISTER	18324	PC74HCT164D
U42	231130	IC, DIGITAL, FLIP FLOP	18324	PC74HC273

401980-001 PCB ASSY., 1260-14, OPT. 14

REF DESIG	RACAL-DANA P/N	DESCRIPTION	FSC	MANUFACTURER'S P/N
U44	231120	IC, 8-BIT, PARALLEL/SERIAL OUT S.R.	18324	74HCT166D
U45	231131	IC, DIGITAL, SHIFT REGISTER	18324	PC74HCT164D
U46	231130	IC, DIGITAL, FLIP FLOP	18324	PC74HC273
U48	231120	IC, 8-BIT, PARALLEL/SERIAL OUT S.R.	18324	74HCT166D
U49	231096	IC, QUAD DIFF RECEIVER	01295	AM26LS32ACD
U50	231096	IC, QUAD DIFF RECEIVER	01295	AM26LS32ACD
U51	231125	IC, DIGITAL, LINE DRIVER	27014	DS26LS31MN
U52	231154	IC, PROGRAMMED PLA	21793	231154
U53	231153	IC, PROGRAMMED PLA	21793	231153
U54	231094	IC, DEMUX DECODER	18324	N74LS138D
U55	231094	IC, DEMUX DECODER	18324	N74LS138D
U56	231135	IC, DIGITAL, 4-BIT COMPARATOR	18324	PC74HCT85D
U57	231093	IC, QUAD COMPARATOR	04713	LM339D
U60	231120	IC, 8-BIT, PARALLEL/SERIAL OUT S.R.	18324	74HCT166D
U61	231131	IC, DIGITAL, SHIFT REGISTER	18324	PC74HCT164D
U62	231131	IC, DIGITAL, SHIFT REGISTER	18324	PC74HCT164D
U64	230973	IC,HEX INVERTER	07263	74F04SC
U65	230973	IC,HEX INVERTER	07263	74F04SC
U70	231152	IC, PROGRAMMED PIA	21793	231152
U71	231147	IC, MULTIPLEXER	04713	74HC253D
U72	231147	IC, MULTIPLEXER	04713	74HC253D
U80-U91	231402	IC, DIGITAL, OCTAL RECEIVER	01295	SN74HCT645N
U92	231299	IC, MODE SELECT PAL	21793	231299
U95	230414	IC,QUAD 2-INPUT "EXCLUSIVE OR"GATES	01295	74LS86
U96	231403	IC, DIGITAL, OCTAL BUFFER	01295	SN74HCT244N
U97-U99	231130	IC, DIGITAL, FLIP FLOP	18324	PC74HC273
U100-U102	231131	IC, DIGITAL, SHIFT REGISTER	18324	PC74HCT164D
U103	231298	IC, HANDSHAKE PAL	21793	231298
U104	230796	IC, QUAD 2-INPUT NAND GATE	02735	74HCT00E
U105	230796	IC, QUAD 2-INPUT NAND GATE	02735	74HCT00E
U106	230973	IC,HEX INVERTER	07263	74F04SC
U107-U109	231120	IC, 8-BIT, PARALLEL/SERIAL OUT S.R.	18324	74HCT166D
U114	230796	IC, QUAD 2-INPUT NAND GATE	02735	74HCT00E
U117	231143	IC, HEX INVERTER	18324	74HCT14N
U118	231297	IC, PAL	21793	231297
U119-U130	231404	IC, DIGITAL, OCTAL RECEIVER	01295	SN74HCT652NT
Z1	080134	RES NETWORK, DIPSHUNT, 1 OHM, 16P8R	11236	198DM8-5555555
Z3	080134	RES NETWORK, DIPSHUNT, 1 OHM, 16P8R	11236	198DM8-5555555
Z5	080134	RES NETWORK, DIPSHUNT, 1 OHM, 16P8R	11236	198DM8-5555555
Z7	080134	RES NETWORK, DIPSHUNT, 1 OHM, 16P8R	11236	198DM8-5555555
Z9	080134	RES NETWORK, DIPSHUNT, 1 OHM, 16P8R	11236	198DM8-5555555
Z11	080134	RES NETWORK, DIPSHUNT, 1 OHM, 16P8R	11236	198DM8-5555555
Z13	080134	RES NETWORK, DIPSHUNT, 1 OHM, 16P8R	11236	198DM8-5555555
Z15	080134	RES NETWORK, DIPSHUNT, 1 OHM, 16P8R	11236	198DM8-5555555
Z17	080134	RES NETWORK, DIPSHUNT, 1 OHM, 16P8R	11236	198DM8-5555555
Z19	080134	RES NETWORK, DIPSHUNT, 1 OHM, 16P8R	11236	198DM8-5555555
Z21	080134	RES NETWORK, DIPSHUNT, 1 OHM, 16P8R	11236	198DM8-5555555
Z23	080134	RES NETWORK, DIPSHUNT, 1 OHM, 16P8R	11236	198DM8-5555555
Z25	080114	RES NETWORK, 16P8R, 15K	73138	628-AL-153J
Z26	080120	RES NETWORK, 10K	11236	767-161R10K
Z30	080020	RES NETWORK, 8P7R, 10K, 2 PERCENT	11236	750-81-R10K
Z31	080020	RES NETWORK, 8P7R, 10K, 2 PERCENT	11236	750-81-R10K
(54)1	401951	PCB ASSY., LBUS JUMPER	21793	401951
(56)1	411980	PCB 1260-14 (UNLOADED)	21793	411980
(59)1	455776	PANEL, FRONT, 1260-14	21793	455776
(62)A/R	500253	CABLE, FLAT RIBBON, 60 COND	53387	3365/60
(63)A/R	500272	CABLE, FLAT, RIBBON, 50 CONDUCTOR, 28GA	70903	9L28050
(70)12	601606	SOCKET, IC, 24-PIN, LOW PROFILE	00779	641933-4
(71)13	601632	CONNECTOR, DIP, RECEPTACLE, 20P	00779	641612-4

401980-001 PCB ASSY., 1260-14, OPT. 14

REF DESIG	RACAL-DANA P/N	DESCRIPTION	FSC	MANUFACTURER'S P/N
{76}2	601966	CONNECTOR, CABLE, FLAT, 60 PIN	53387	3334-6000
{78}2	601985	CONNECTOR, IDC SOCKET, 50P	53387	3425-6000
{82}8	611023	KEY, POLARIZING CONNECTOR	06776	PK-3
{83}4	611258-001	STANDOFF, SWAGE 4-40 X .170	06540	8091-118-8-440-28
{84}1	611264	HANDLE, EXTRACTOR, BOTTOM	62559	20817-327
{85}1	611265	HANDLE, EXTRACTOR, TOP	62559	20817-328
{86}5	611266	MOUNTING HARDWARE, HANDLE	62559	21100-745
{89}8	615545	SCREW, PFH, 4-40 X .500	-	-
{91}2	616405	SCREW, PFH, M2.5-.45 X 12	-	-
{93}8	617016	NUT, HEX, 4-40	-	-
{94}8	617102	WASHER, FLAT, #4, LIGHT SERIES	-	-
{95}8	617127	WASHER, LOCK, #4, LIGHT SERIES	-	-
{97}A/R	920962	LOCTITE, 242, MED STR.	05972	272
{98}1	921148	LABEL SET, VXI-VME	21793	921148

List of Suppliers

FSC	SUPPLIER
00779	AMP INC. HARRISBURG, PA
01295	TEXAS INSTRUMENTS INC. DALLAS, TX
01526	GENICOM CORP. WAYNESBORO, VA
02735	RCA (SOLID STATE DIV.) SOMERVILLE, NEW JERSEY
03508	GENERAL ELECTRIC CO. (SEMI-CONDUCTOR PRODUCTS) AUBURN, NY
04713	MOTOROLA INC. (SEMICONDUCTOR PRODUCTS DIV) PHOENIX, AZ
05397	UNION CARBIDE CORP (MATERIALS SYSTEMS DIV) CLEVELAND, OHIO
05972	LOCTITE CORP HARTFORD, CONN
06383	PANDUIT CORP TINLEY PARK, CA
06540	AMATOM ELECTRONIC HARDWARE NEW ROCHELLE, NY
06776	ROBINSON NUGENT INC. NEW ALBANY, IN
07263	FAIRCHILD (SEMICONDUCTOR DIV.) MOUNTAIN VIEW, CA
08261	SPECTRA-STRIP CORP GARDEN GROVE, CA
11236	CTS OF BERNE INC. BERNE, INDIANA
16956	DENNISON MFG. CO. FRAMINGTON, MA
18324	SIGNETICS INC. SUNNYVALE, CA
21793	RACAL-DANA INSTRUMENTS INC. IRVINE, CA
22526	DUPONT CONNECTOR CO. NEW CUMBERLAND, PA
27014	NATIONAL SEMI-CONDUCTOR CORP. SANTA CLARA, CA
29005	STORM PRODUCTS CO. LOS ANGELES, CA
34359	THREE (3) M CO. (COMMERCIAL TAPE DIV.) ST. PAUL, MN
52072	CIRCUIT ASSY. CORP. COSTA MESA, CA
52210	GETTING ENGRG & MFG. CO. SPRING MILLS, PA
53387	THREE (3) M CO. ST. PAUL, MN
55322	SAMTEC, INC. NEW ALBANY, IN
56289	SPAGUE ELECTRIC CO. N. ADAMS, MA
61529	AROMAT CORP. CUPERTINO, CA
62559	SCHROFF, INC. WARWICK, RI
65832	AMERICAN RESEARCH ENGRG ELGIN, IL
70903	BELDEN CORP. CHICAGO, IL
73138	BECKMAN INSTRUMENTS FULLERTON, CA
73445	AMPEREX ELECTRONIC CORP. HICKSVILLE, NY
78189	ILLINOIS TOOL WORKS, INC. (SHAKEPROOF, DIV.) ELGIN, IL
81349	MILITARY SPECIFICATION
86928	SEASTROM MFG CO. INC. GLENDALE, CA
91637	DALE ELECTRONICS INC. COLUMBUS, NEBRASKA
92194	ALPHA WIRE ELIZABETH, NEW JERSEY
95275	VITRAMON, INC. BRIDGEPORT, CONNECTICUT
98291	SEALECTRO CORP. MAMARONECK, NY

PUBLICATION NO. 980673-013

1260-17
80-CHANNEL SPDT
MATRIX MODULE

1260 VXI
SWITCHING CARD

RACAL-DANA

RACAL-DANA INSTRUMENTS INC.

4 Goodyear Street, P.O. Box C-19541, Irvine, CA 92713
Telephone: 714/859-8999, Fax: 714/859-2505

RACAL INSTRUMENTS, LTD.

480 Bath Road, Slough, Berkshire, SL1 6BE, England
Telephone: 44-628 604455, Fax: 44-628 662017

RACAL SYSTEMS ELECTRONIQUE S.A.

18 Avenue Dutartre, 78150 Le Chesnay, France
Telephone: 33-1-3-955-8888, Fax: 33-1-3-955-6735

RACAL ELEKTRONIK SYSTEMS GmbH

Frankenforster Strasse 21, D-5060 Bergisch-Gladbach 1, Federal Republic of Germany
Telephone: 49-22-04-60081, Fax: 49-22-04-21491

RACAL SYSTEMS ELETTRONICA

Via Roma, 108/PAL, E1, 20060 Cassina de Pecchi, Milan, Italy
Telephone: 39-2-9514717/737/770, Fax: 39-2-9514522

RACAL

PUBLICATION DATE: APRIL 1, 1993

Copyright © 1993 by Racal-Dana Instruments Inc. Printed in the United States of America. All rights reserved.
This book or parts thereof may not be reproduced in any form without written permission of the publishers.

WARRANTY STATEMENT

Products sold by Racal-Dana Instruments Inc. are warranted to be free from defects in workmanship or materials. Racal-Dana will, at its option, either repair or replace any hardware products which prove to be defective during the warranty period.

Duration of Warranty

The warranty period for all Racal-Dana hardware is one year, except software and firmware products designated for use with Racal-Dana hardware are warranted not to fail to execute their programming instructions due to defect in materials or workmanship for a period of ninety (90) days from the date of delivery to the initial end user.

Return of Product

Products returned to Racal-Dana for repair during the warranty period must have a Return Material Authorization (RMA) number and shall be shipped prepaid. Within the United States the RMA number can be obtained by calling Customer Service at 1-800-RAC-DANA.

Limitation of Warranty

Racal-Dana shall be released from all obligations under this warranty in the event repairs or modifications are made by persons other than authorized Racal-Dana service personnel or without the written consent of Racal-Dana.

Racal-Dana expressly disclaims any liability to its customers, dealers and representatives and to users of its products, and to any other person or persons, for special or consequential damages of any kind and from any cause whatsoever arising out of or in any way connected with the manufacture, sale, handling, repair, maintenance, replacement or use of said products.

Representations and warranties made by any person, including dealers and representatives of Racal-Dana, which are inconsistent or in conflict with the terms of this warranty (including but not limited to the limitations of the liability of Racal-Dana as set forth above), shall not be binding upon Racal-Dana unless reduced to writing and approved by an officer of Racal-Dana.

Except as stated above, Racal-Dana makes no warranty, express or implied (either in fact or by operation of law), statutory or otherwise; and except to the extent stated above, Racal-Dana shall have no liability under any warranty, express or implied (either in fact or by operation of law), statutory or otherwise.

PROPRIETARY NOTICE

This document and the technical data herein disclosed, are proprietary to Racal-Dana Instruments, Inc., and shall not, without express written permission of Racal-Dana Instruments, Inc., be used, in whole or in part to solicit quotations from a competitive source or used for manufacture by anyone other than Racal-Dana Instruments, Inc. The information herein has been developed at private expense, and may only be used for operation and maintenance reference purposes or for purposes of engineering evaluation and incorporation into technical specifications and other documents which specify procurement of products from Racal-Dana Instruments, Inc.

FOR YOUR SAFETY

Before undertaking any troubleshooting, maintenance or exploratory procedure, read carefully the **WARNING** and **CAUTION** notices.

This equipment contains voltage hazardous to human life and safety, and is capable of inflicting personal injury.

If this instrument is to be powered from the AC line (mains) through an autotransformer, ensure the common connector is connected to the neutral (earthed pole) of the power supply.

Before operating the unit, ensure the conductor (green wire) is connected to the ground (earth) conductor of the power outlet. Do not use a two-conductor extension cord or a three-prong/two-prong adaptor. This will defeat the protective feature of the third conductor in the power cord.

Maintenance and calibration procedures sometimes call for operation of the unit with power applied and protective covers removed. Read the procedures and heed warnings to avoid "live" circuit points.

Before operating this instrument:

1. Ensure the instrument is configured to operate on the voltage at the power source. See Installation Section.

2. Ensure the proper fuse is in place for the power source to operate.

3. Ensure all other devices connected to or in proximity to this instrument are properly grounded or connected to the protective third-wire earth ground.

If the instrument:

- fails to operate satisfactorily
- shows visible damage
- has been stored under unfavorable conditions
- has sustained stress

Do not operate until performance is checked by qualified personnel.

TABLE OF CONTENTS

1260-17

1.0	1260-17 Module Specification	1-1
2.0	Installation Instructions	1-2
2.1	Unpacking and Inspection	1-2
2.2	Reshipment Instructions	1-2
2.3	Option 01 Installation	1-2
2.4	Module Installation	1-2
3.0	1260-17 Module Specific Syntax	1-3
3.1	Syntax	1-3
4.0	Drawings	
5.0	Parts List	

FIGURES

3-1	1260-17 Block Diagram	1-4
3-2	1260-17 Pin Connections, Front View	1-5

1.0 1260-17 Module Specifications

The 1260-17 80-Channel SPDT Switch Module is a high density multipurpose switch card. It switches single lines per channel. Each channel is available at the modules front panel as either a normally open (NO) or normally closed (NC) path. A block diagram of the module is shown in Figure 3-1.

Specifications

User Connector	64-Pin (2 Row) IDC Quick Disconnect User connector is included with the 1260-17. *
Maximum Switchable Voltage (Terminal-Terminal or Terminal Chassis)	110 VDC, 125 VAC RMS
Maximum Switchable Current Per Channel	1 ADC, 1 A RMS
Maximum Switchable Power Per Channel	30 WDC, 62.5 VA AC
Path Resistance	< 0.5 ohm
DC Isolation COM-NO	> 7.5×10^8 ohms
Bandwidth (50 ohm termination)	> 10 MHz
Insertion Loss (50 ohm termination)	< .1 dB to 100 KHz < .5 dB to 1 MHz < 1 dB to 10 MHz (typical)
Crosstalk (50 ohm termination)	< -45 dB to 100 KHz < -40 dB to 1 MHz < -35 dB to 10 MHz
Isolation (50 ohm termination)	< -30 dB to 10 MHz

Switching Time	2ms
Minimum Option 01 Firmware Revision	16.1

* A crimp connector kit is also available for this module (P/N 404975-003). A strain relief option can be ordered separately for this crimp connector kit.

3.0 1260-17 Module Specific Syntax

The Module Specific Syntax for the 1260-17 is required in the use of the OPEN and CLOSE commands. It will also appear in data output by the Master in response to the PDATAOUT and PSETUP commands.

3.1 Syntax

3.1.1 The Module Specific Syntax for the 1260-17 Signal Multiplexer/Scanner module is as follows:

<module address>.<channel number>

where <module address> is the address.

<channel number> is the reference number of the channel to be closed, value 0 - 79.

NOTE

The <module address> used here is not the VXIbus defined logical address of the 1260 Series Master. It is peculiar to the 1260 Series and describes the switching module in relation to the Master. This address corresponds to the binary value of the switch setting of SW1 on the switching module PCB.

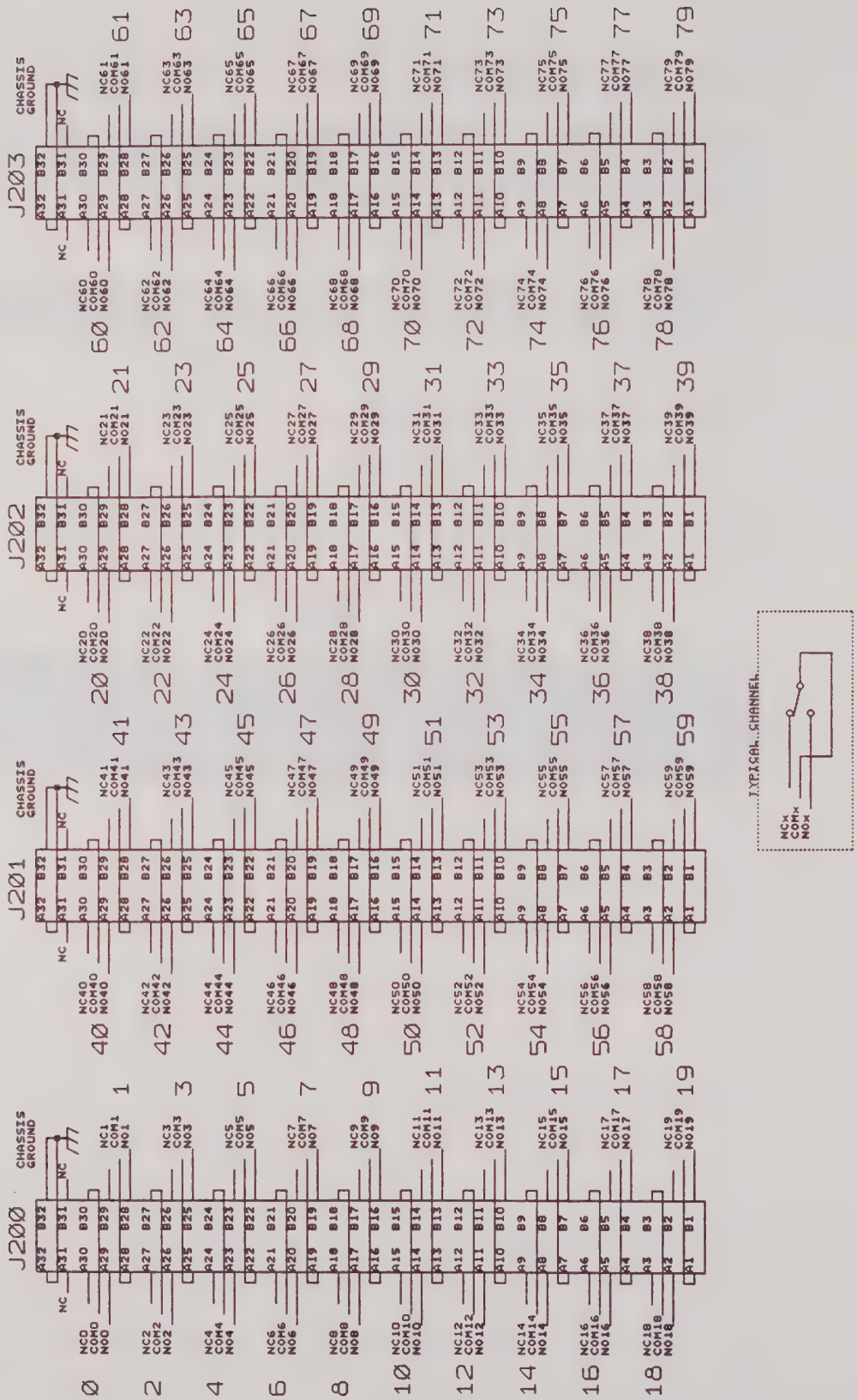

Figure 3-1, 1260-17 Block Diagram

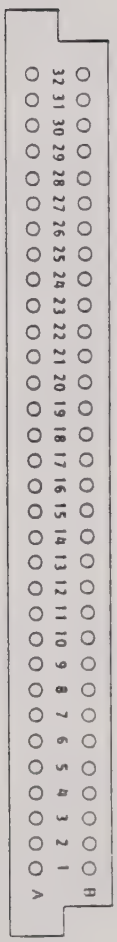

Figure 3-2, 1260-17 Pin Connections, Front View

4.0 Assembly Drawings

407165	Final Assy, 1260-17 (IDC Connectors)	1-7
407165-001	Final Assy, 1260-17A (Crimp Connectors	1-7
405070	PCB Assy, 1260-17	1-8
435070	Schematic, 1260-17	1-10
405071	PCB Assy, 1260-17D	1-26
435071	Schematic, 1270-17D	1-27

5.0 Parts List

407165	Final Assy, 1260-17 (IDC Connectors)	1-33
404975-002	Shipping Kit, 1260-17 (IDC Connectors)	1-34
407165-001	Final Assy, 1260-17A (Crimp Connectors)	1-35
404975-003	Shipping Kit, 1260-17A (Crimp Connectors)	1-36
405070	PCB Assy, 1260-17	1-37
405071	PCB Assy, 1260-17D	1-39

List of Suppliers 1-40

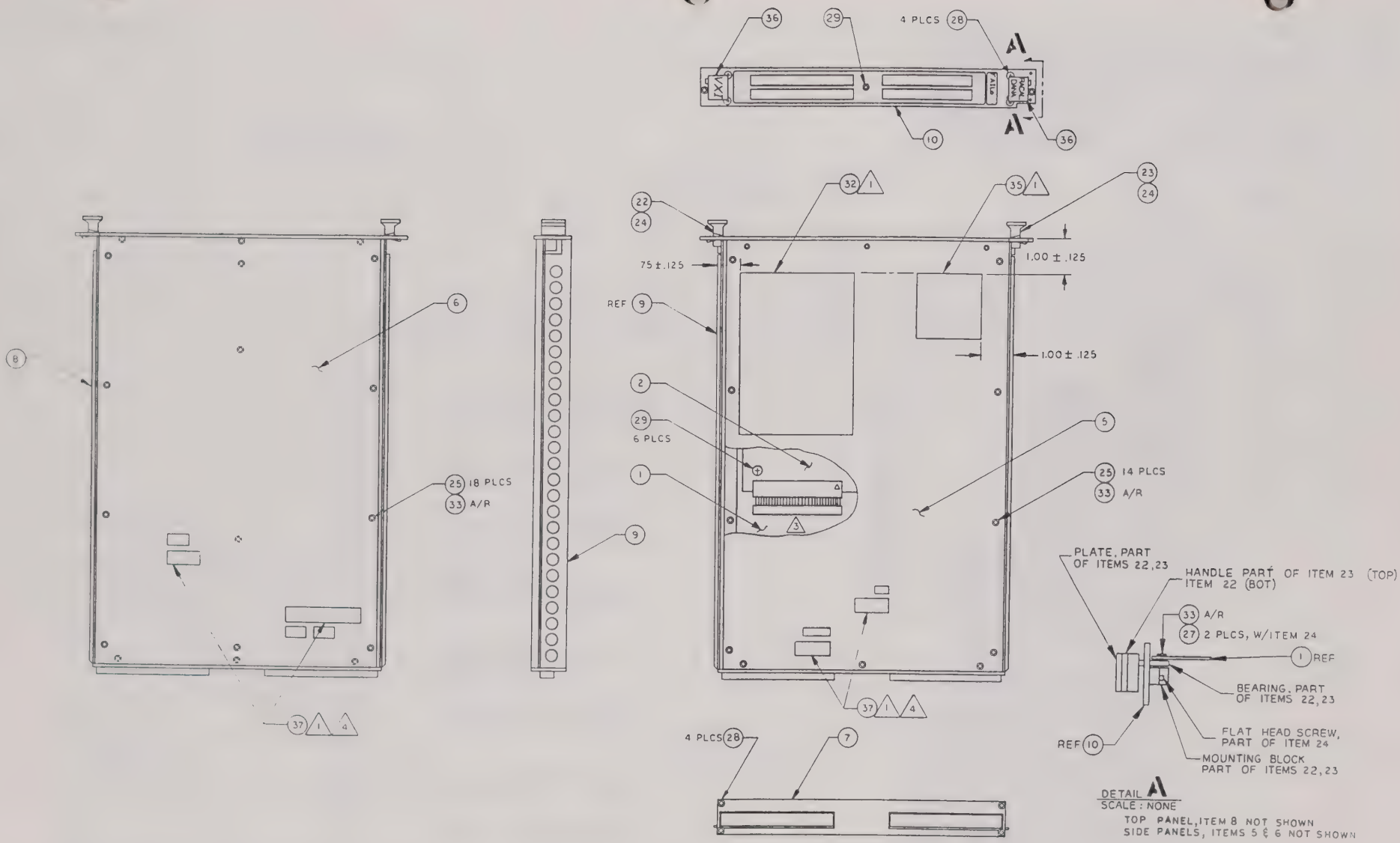

5 407165 USES ITEM 38 (404975-002) QTY 1.
407165-001 USES ITEM 39 (404975-003) QTY. 1 } SEE SHT 2 OF 2.

4 AFFIX LABELS AS SHOWN, ALIGN LABEL TEXT WITH APPROPRIATE SWITCH ACTUATORS

3 CONNECT CABLE FROM ITEM 1 TO ITEM 2 AS SHOWN.

2. INCLUDE ITEM 38 (404975-002 SHIP KIT) OR ITEM 39 (404975-003 SHIP KIT) IN BOX WITH ASSY.

1 LOCATE LABELS WHERE SHOWN.

NOTES: UNLESS OTHERWISE SPECIFIED

PROPRIETARY NOTICE
THIS DOCUMENT AND THE TECHNICAL DATA HEREON DISCLOSED ARE PROPRIETARY TO RACAL-DANA INSTRUMENTS INC AND SHALL NOT WITHOUT EXPRESS WRITTEN PERMISSION OF RACAL-DANA INSTRUMENTS INC BE USED RELEASED OR DISCLOSED IN WHOLE OR IN PART OR USED TO SOLICIT QUOTATIONS FROM A COMPETITIVE SOURCE OR USED FOR MANUFACTURE BY ANYONE OTHER THAN RACAL-DANA INSTRUMENTS INC THE INFORMATION HEREON HAS BEEN DEVELOPED AT PRIVATE EXPENSE AND MAY ONLY BE USED FOR PURPOSES OF ENGINEERING EVALUATION AND FOR INCORPORATION INTO TECHNICAL SPECIFICATIONS AND OTHER DOCUMENTS WHICH SPECIFY PROCUREMENT OF PRODUCTS FROM RACAL-DANA INSTRUMENTS INC

RACAL-DANA Instruments inc.
4 GOODYEAR, IRVINE, CALIFORNIA 92714

DOCUMENT TITLE: FINAL ASSY, 1260-17, 17A

SIZE	CODE IDENT NO	DOCUMENT NO	REV
D	21793	407165-001	A

SCALE — SHEET 1 OF 2

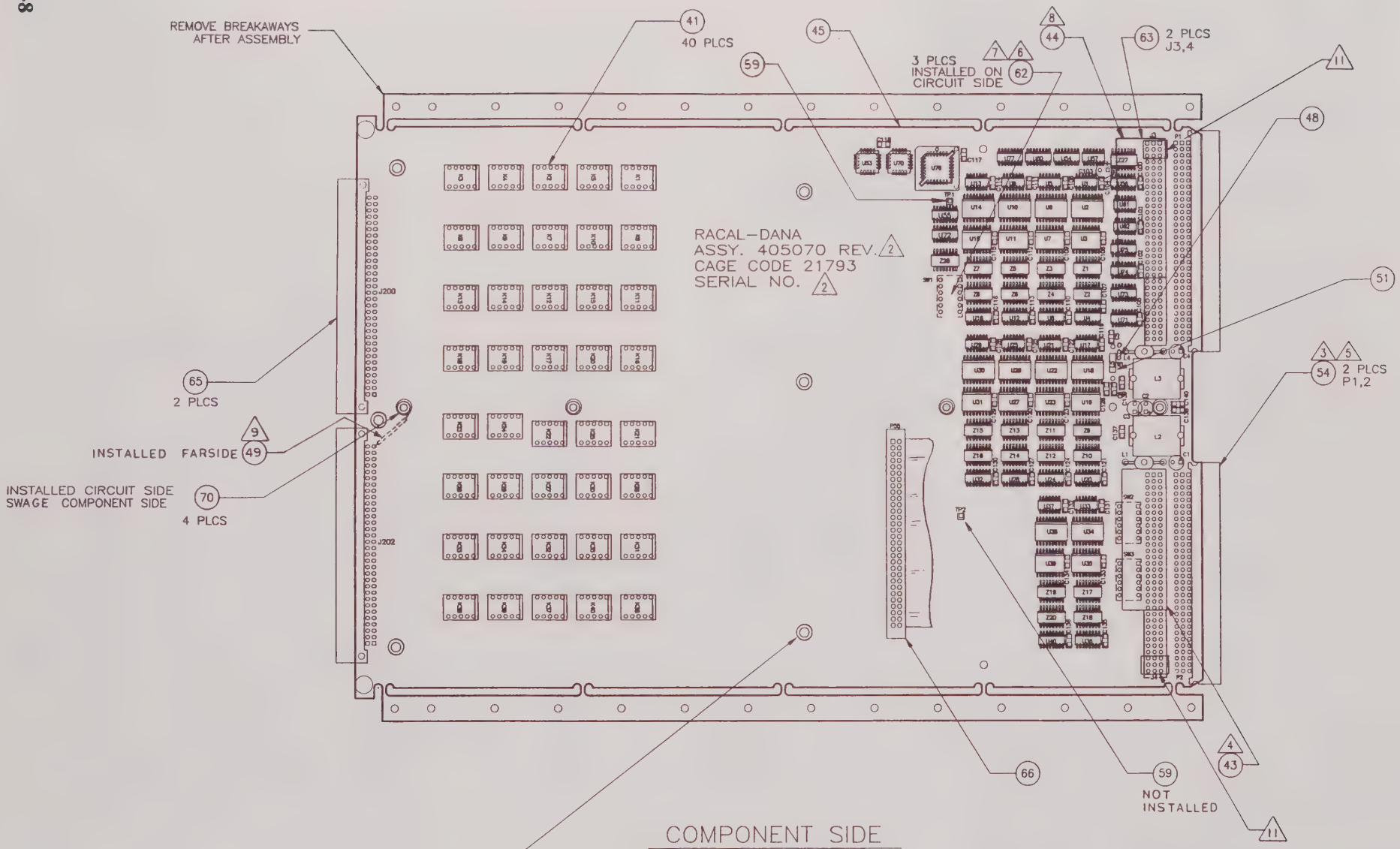

COMPONENT SIDE

NOTES: SEE SHEET 2.

PROPRIETARY NOTICE
THIS DOCUMENT AND THE TECHNICAL DATA HEREON DISCLOSED ARE PROPRIETARY TO RACAL-DANA INSTRUMENTS INC AND SHALL NOT WITHOUT EXPRESS WRITTEN PERMISSION OF RACAL-DANA INSTRUMENTS INC BE USED, RELEASED OR DISCLOSED IN WHOLE OR IN PART, OR USED TO SOLICIT QUOTATIONS FROM A COMPETITIVE SOURCE OR USED FOR MANUFACTURE BY ANYONE OTHER THAN RACAL-DANA INSTRUMENTS INC THE INFORMATION HEREON HAS BEEN DEVELOPED AT PRIVATE EXPENSE AND MAY ONLY BE USED FOR PURPOSES OF ENGINEERING EVALUATION AND FOR INCORPORATION INTO TECHNICAL SPECIFICATIONS AND OTHER DOCUMENTS WHICH SPECIFY PROCUREMENT OF PRODUCTS FROM RACAL-DANA INSTRUMENTS INC

RACAL-DANA Instruments Inc.			
4 GOODYEAR, IRVINE, CALIFORNIA 92714			
DOCUMENT TITLE			
PCB ASSY,1260-17			
SIZE	CODE IDENT NO	DOCUMENT NO	REV.
D	21793	405070	A
SCALE		SHEET 1 OF 4	

NOTES:

1. REFERENCE SCHEMATIC 435070.
2. INK STAMP SERIAL NUMBER AND CURRENT REVISION ON COMPONENT SIDE APPROX. WHERE SHOWN.
3. SOLDER TAILS ON CIRCUIT SIDE OF PCB FOR P1 AND P2 (ITEM 54) TO BE TRIMMED TO A MAXIMUM HEIGHT OF .045.
4. INSTALL (ITEM 43) PCB INTO (ITEM 63) J4.
5. P1 AND P2 MUST BE INSTALLED FLUSH AT RIGHT ANGLE TO PCB.
6. SET SW1 (ITEM 62) TO LOGICAL ADDRESS 1 PER TABLE 1. ALSO SET SW1 POSITION 5 TO ON. DO NOT WAVE SOLDER.
7. SET SW2 AND SW3 (ITEM 62) TO ON POSITION. DO NOT WAVE SOLDER.
8. INSTALL (ITEM 44) PCB INTO (ITEM 63) J3.
9. SOLDER AT J202 PIN 32B AND ATTACH OTHER END OF WIRE TO THE PAD OF THE STANDOFF INDICATED, ON THE FARSIDE OF THE PCB. THIS OPERATION SHOULD BE DONE AFTER THE STANDOFF IS INSERTED INTO THE BOARD.
10. C5 AND C6 ARE NOT INSTALLED.
11. SOLDER TAILS ON CIRCUIT SIDE OF PCB FOR J3 & J4 (ITEM 63), 3 ROWS (9 PINS) NEAREST EDGE OF PC BOARD TO BE TRIMMED TO A MAXIMUM HEIGHT OF .045.

TABLE 1

LOGICAL ADDRESS	SW1:1	SW1:2	SW1:3	SW1:4	TEST ADDRESS R/W	ID BYTE READ
0	OFF	OFF	OFF	OFF	(illegal)	
1	OFF	OFF	OFF	ON	4804xxh	480601h
2	OFF	OFF	ON	OFF	4808xxh	480A01h
3	OFF	OFF	ON	ON	480Cxxh	480E01h
4	OFF	ON	OFF	OFF	4810xxh	481201h
5	OFF	ON	OFF	ON	4814xxh	481601h
6	OFF	ON	ON	OFF	4818xxh	481A01h
7	OFF	ON	ON	ON	481Cxxh	481E01h
8	ON	OFF	OFF	OFF	4820xxh	482201h
9	ON	OFF	OFF	ON	4824xxh	482601h
10	ON	OFF	ON	OFF	4828xxh	482A01h
11	ON	OFF	ON	ON	482Cxxh	482E01h
12	ON	ON	OFF	OFF	4830xxh	483201h
13	ON	ON	OFF	ON	(illegal)	
14	ON	ON	ON	OFF	(illegal)	
15	ON	ON	ON	ON	(illegal)	

SIZE	CODE IDENT NO	DOCUMENT NO	REV
A	21793	405070	A
SCALE ----		SHEET 2 OF 4	

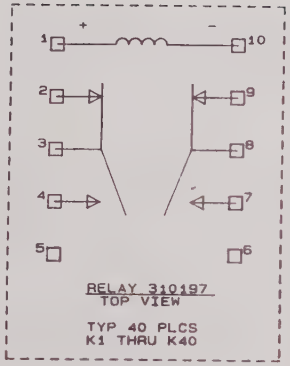

U76	231154 (22V10H)	28	14
U75	26LS31	16	8
U73, 74	26LS32	16	8
U71, 72, 77	74HCT253	16	8
U70	231152-001 (16L8Q)	20	10
U57	LM339	3	12
U56	74HCT85	16	8
U54, 55	74LS138	16	8
U53	231153 (16R4)	20	10
U4, 8, 12, 16, 20, 24, 28 U32, 36, 40, 60	74HCT166	16	8
U3, 7, 11, 15, 19, 23, U27, 31, 35, 39	2803	NC	9
U2, 6, 10, 14, 18, 22, U26, 30, 34, 38	74HCT273	20	10
U1, 5, 9, 13, 17, 21, 25, 29 U33, 37, 61, 62	74HCT164	14	7
REF. DES.	IC TYPE	+5V PIN NO.	GND PIN NO.
IC POWER AND GROUND CONNECTIONS			

Z28
W1
U77
TP2
SW3
P55
L5
K40
J202
C140
HIGHEST REF. DES.

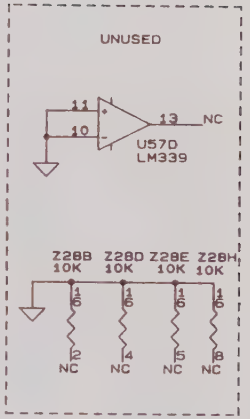

4. TP2, C5 AND C6 ARE NOT INSTALLED.
3. RELAYS K1 THRU K40 ARE RACAL-DANA P/N 310197.
   ALL RELAYS SHOWN IN DE-ENERGIZED POSITION.
2. RESISTOR NETWORKS ARE IN OHMS.
1. CAPACITOR VALUES ARE IN MICROFARADS, 50V, +/-20% UNLESS OTHERWISE SPECIFIED.

NOTES: UNLESS OTHERWISE SPECIFIED

PROPRIETARY NOTICE

THIS DOCUMENT AND THE TECHNICAL DATA HEREON DISCLOSED ARE PROPRIETARY TO RACAL DANA INSTRUMENTS INC AND SHALL NOT WITHOUT EXPRESS WRITTEN PERMISSION OF RACAL DANA INSTRUMENTS INC BE USED RELEASED OR DISCLOSED IN WHOLE OR IN PART OR USED TO SOLICIT QUOTATIONS FROM A COMPETITIVE SOURCE OR USED FOR MANUFACTURE BY ANYONE OTHER THAN RACAL-DANA INSTRUMENTS INC THE INFORMATION HEREON HAS BEEN DEVELOPED AT PRIVATE EXPENSE AND MAY ONLY BE USED FOR PURPOSES OF ENGINEERING EVALUATION AND FOR INCORPORATION INTO TECHNICAL SPECIFICATIONS AND OTHER DOCUMENTS WHICH SPECIFY PROCUREMENT OF PRODUCTS FROM RACAL DANA INSTRUMENTS INC

RACAL-DANA Instruments Inc.
4 GOODYEAR, IRVINE, CALIFORNIA 92714

DOCUMENT TITLE

SCHEM., 1260-17

SIZE	CAGE CODE	DOCUMENT NO	REV
B	21793	435070	A

SCALE _____ SHEET 1 OF 16

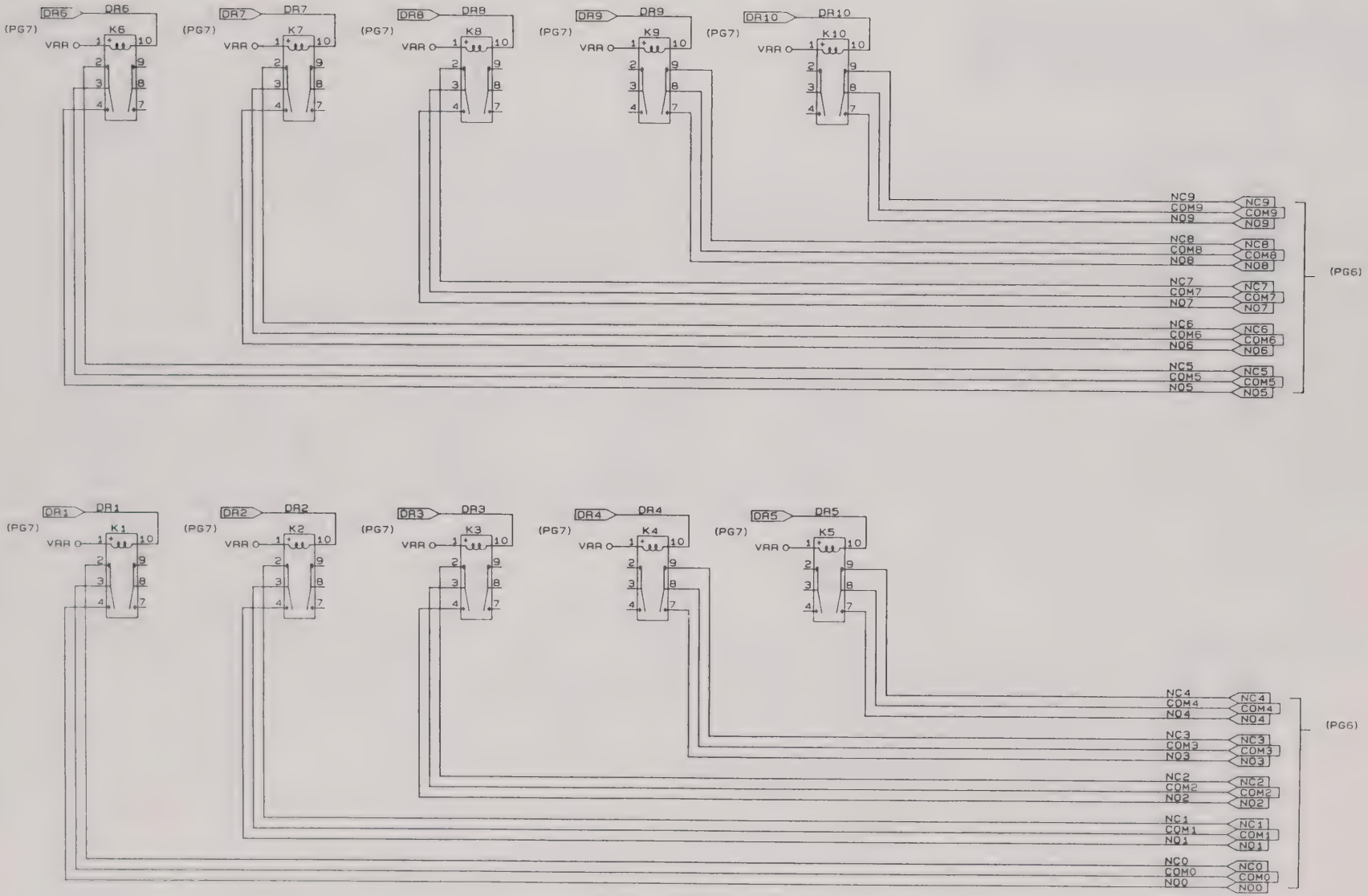

SIZE	CAGE CODE	DOCUMENT NO.	REV
B	21793	435070	A
SCALE _____		SHEET 2 OF 16	

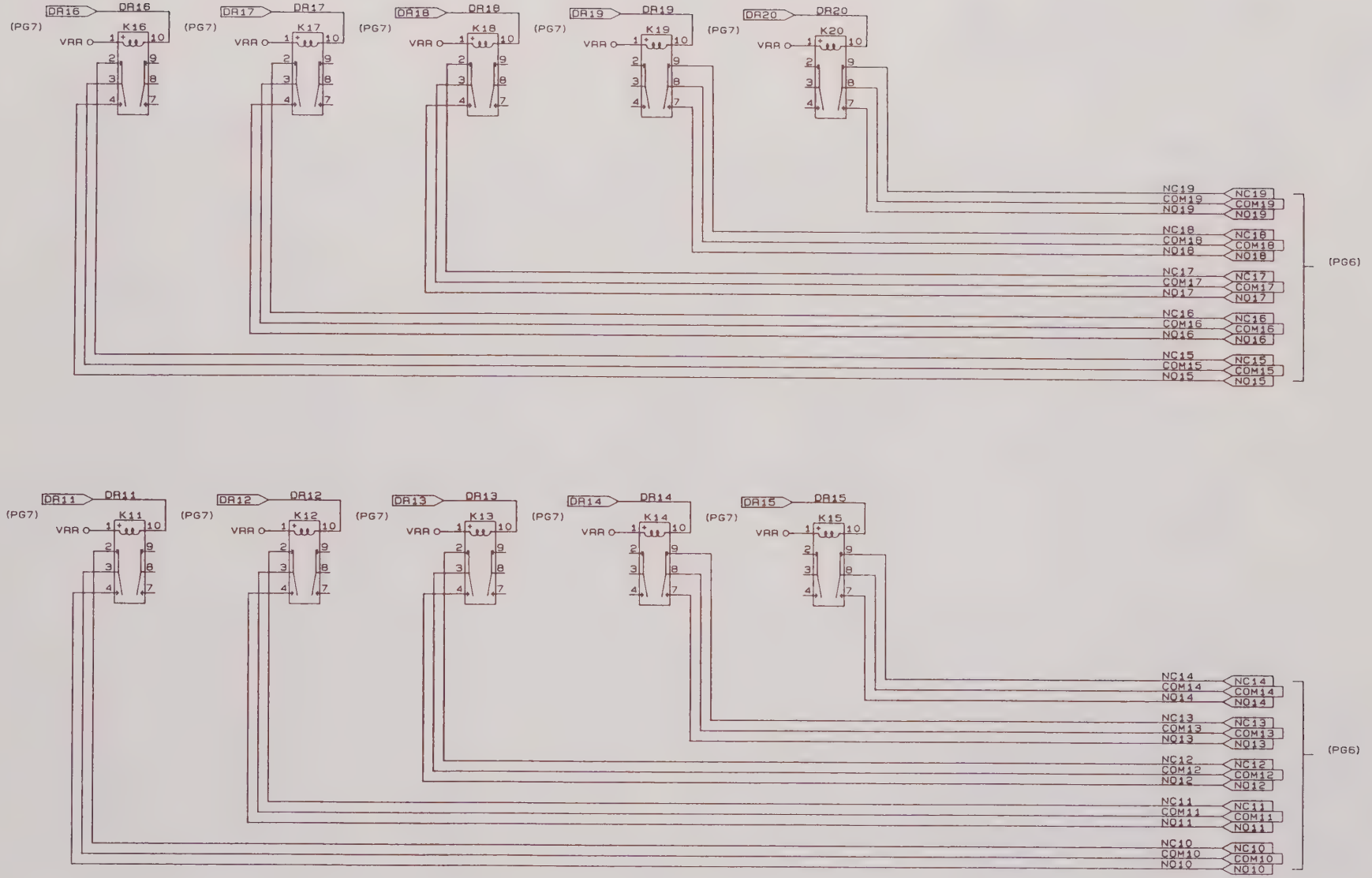

SIZE	CAGE CODE	DOCUMENT NO.	REV
B	21793	435070	A
SCALE		SHEET 3 OF 16	

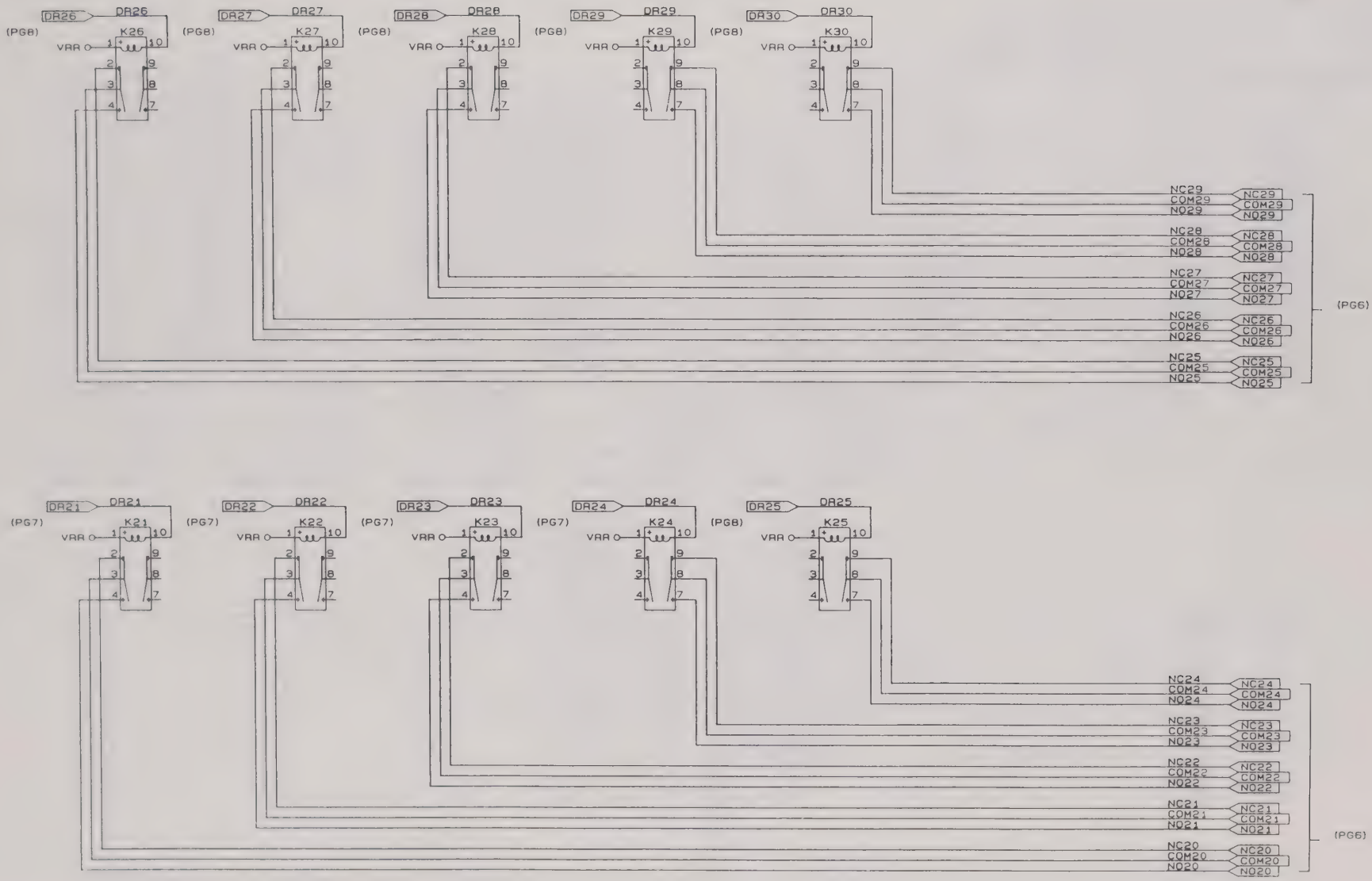

SIZE	CAGE CODE	DOCUMENT NO	REV
B	21793	435070	A
SCALE		SHEET 4 OF 16	

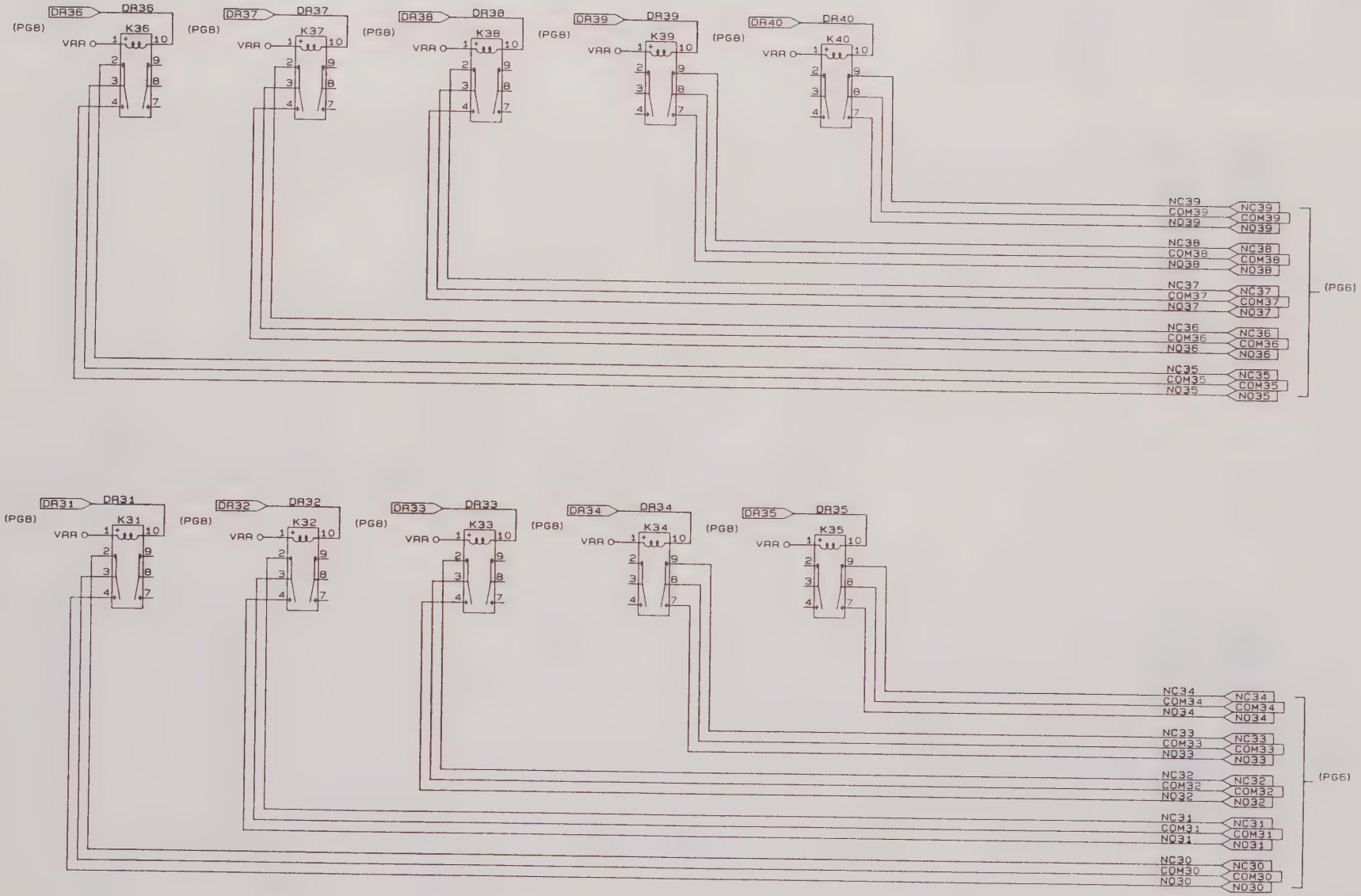

SIZE	CAGE CODE	DOCUMENT NO	REV
B	21793	435070	A
SCALE		SHEET 5 OF 16	

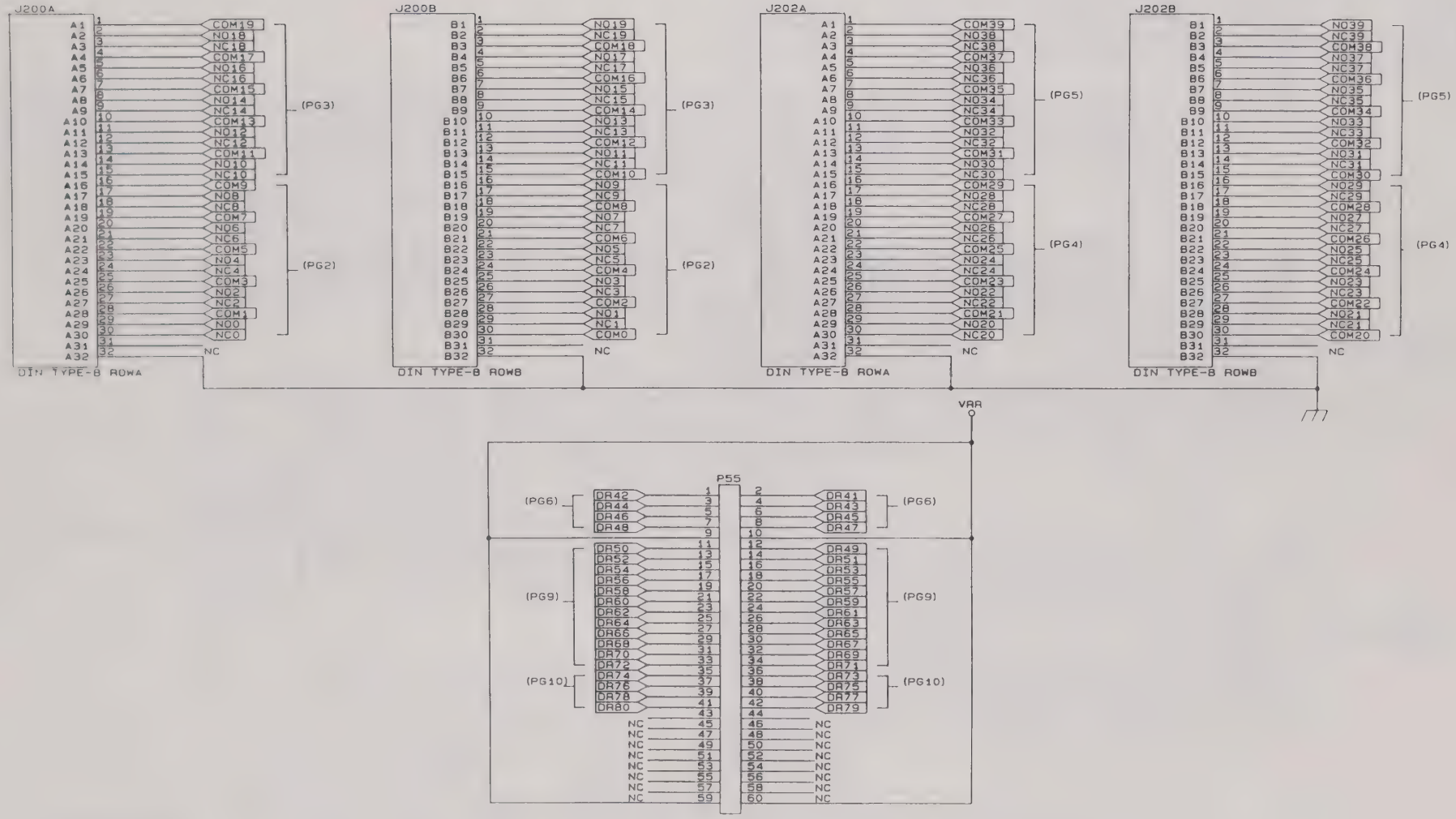

SIZE	CAGE CODE	DOCUMENT NO	REV
B	21793	435070	A
SCALE		SHEET 6	OF 16

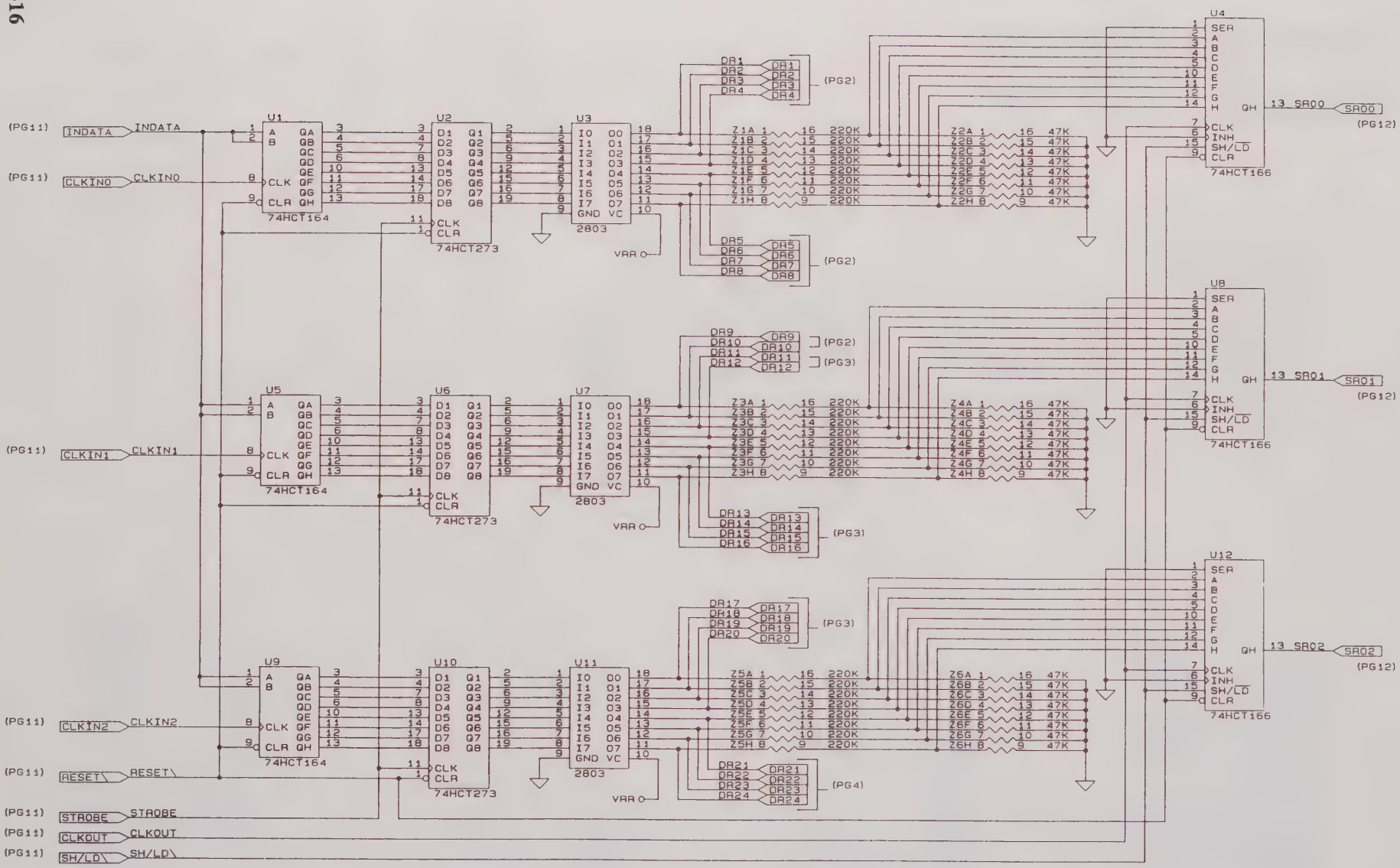

SIZE	CAGE CODE	DOCUMENT NO.	REV
B	21793	435070	A
SCALE		SHEET 7 OF 16	

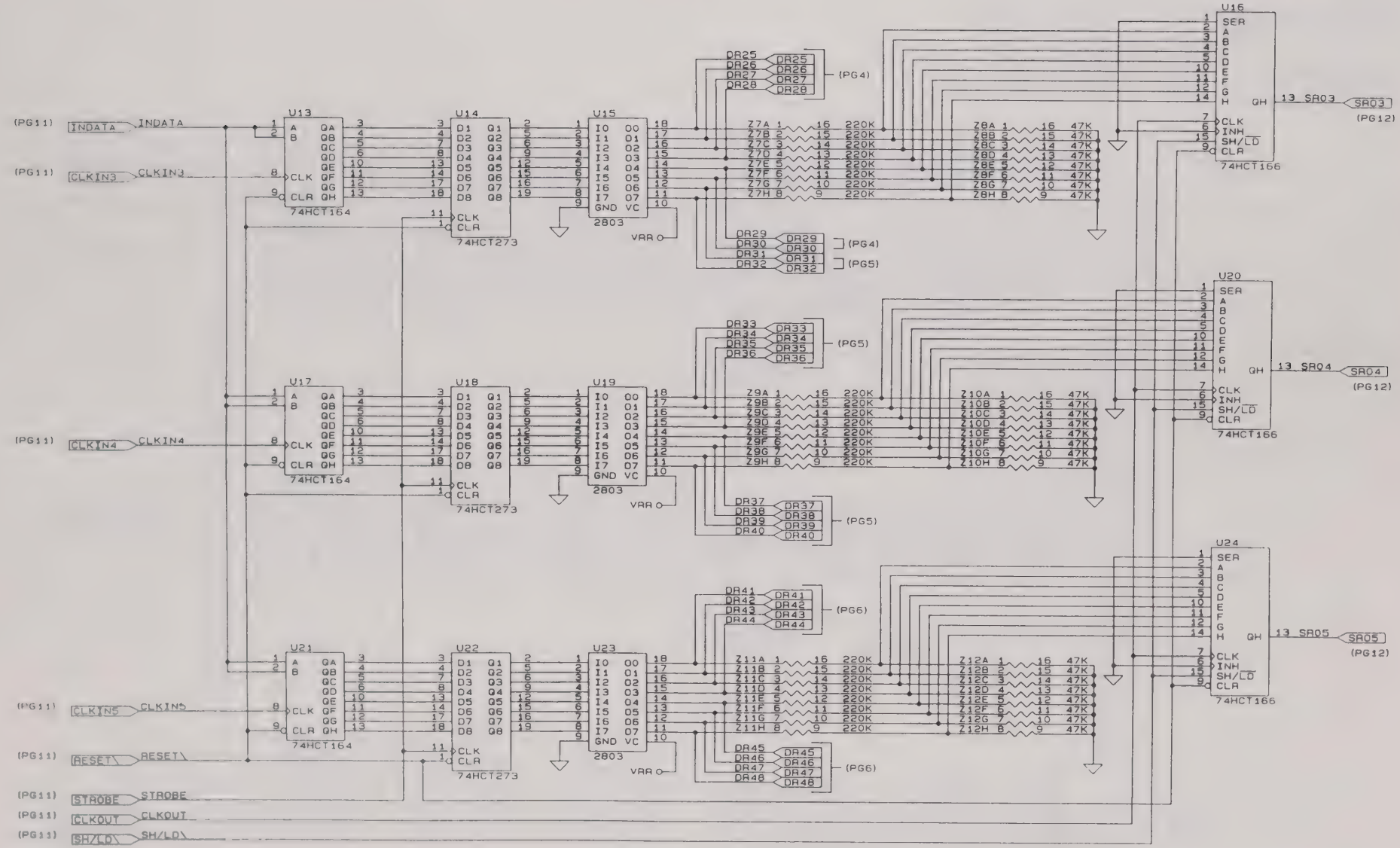

SIZE	CAGE CODE	DOCUMENT NO	REV
B	21793	435070	A
SCALE		SHEET 8 OF 16	

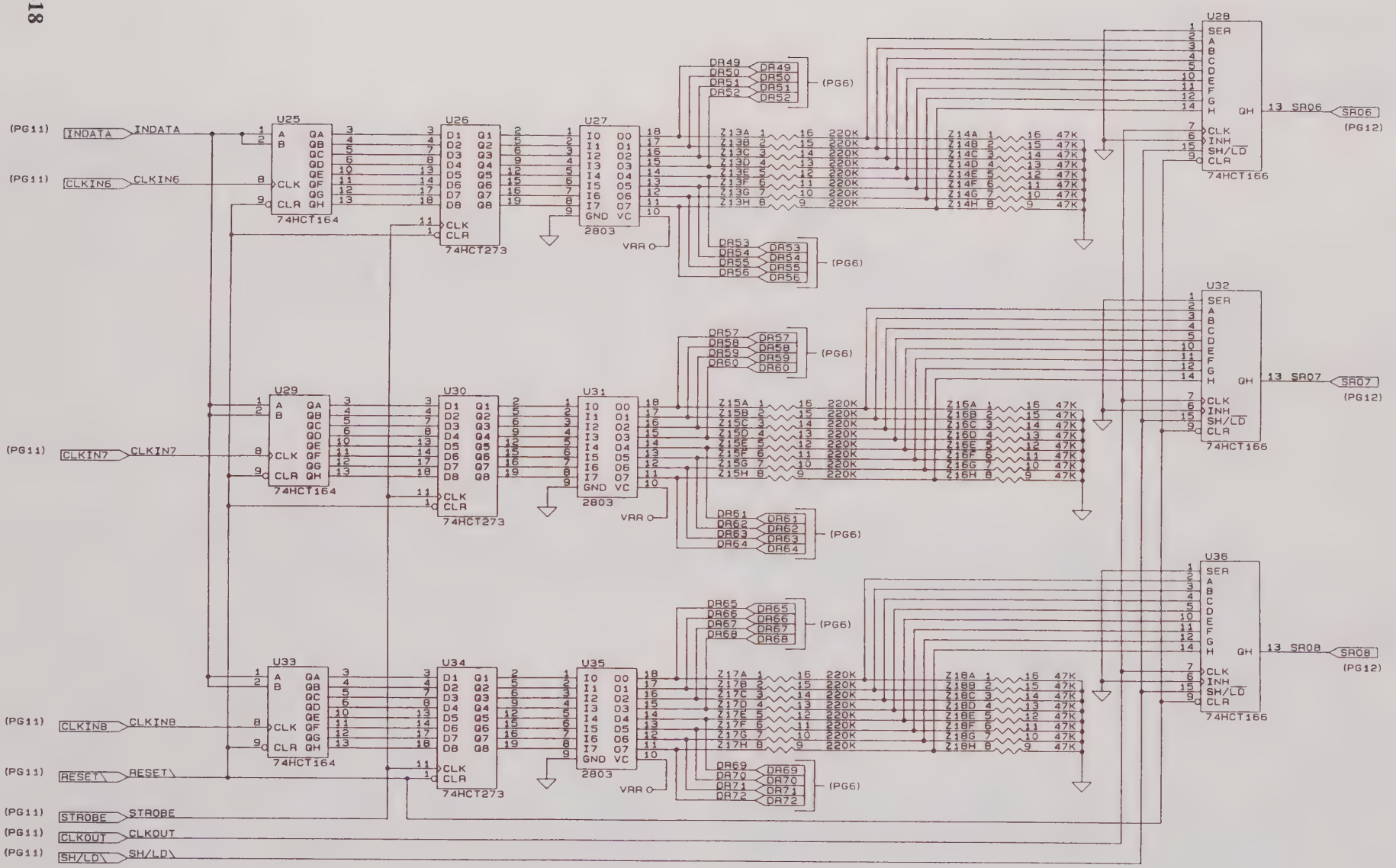

SIZE	CAGE CODE	DOCUMENT NO	REV
B	21793	435070	A
SCALE		SHEET 9 OF 16	

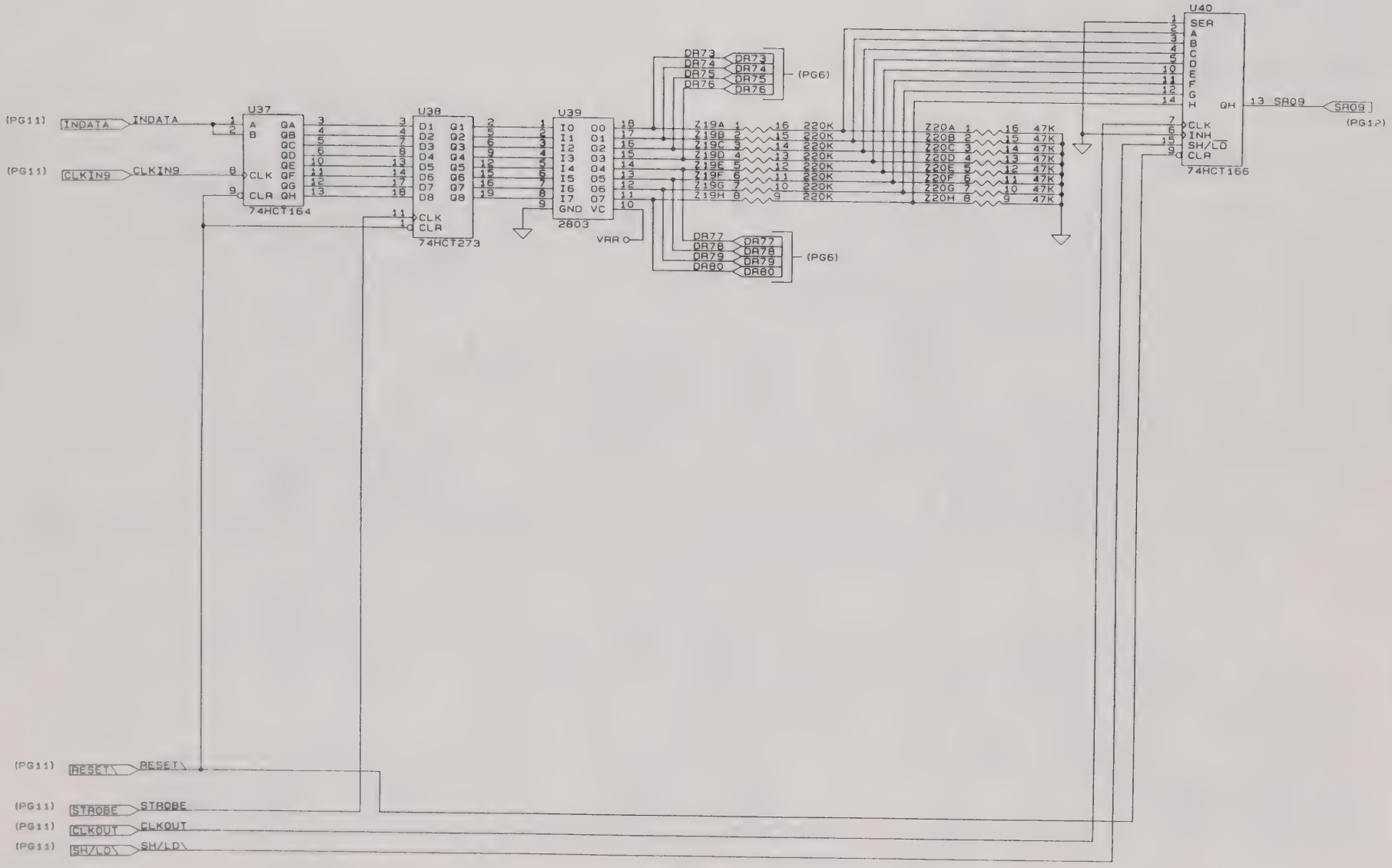

SIZE	CAGE CODE	DOCUMENT NO	REV
B	21793	435070	A
SCALE		SHEET 10 OF 16	

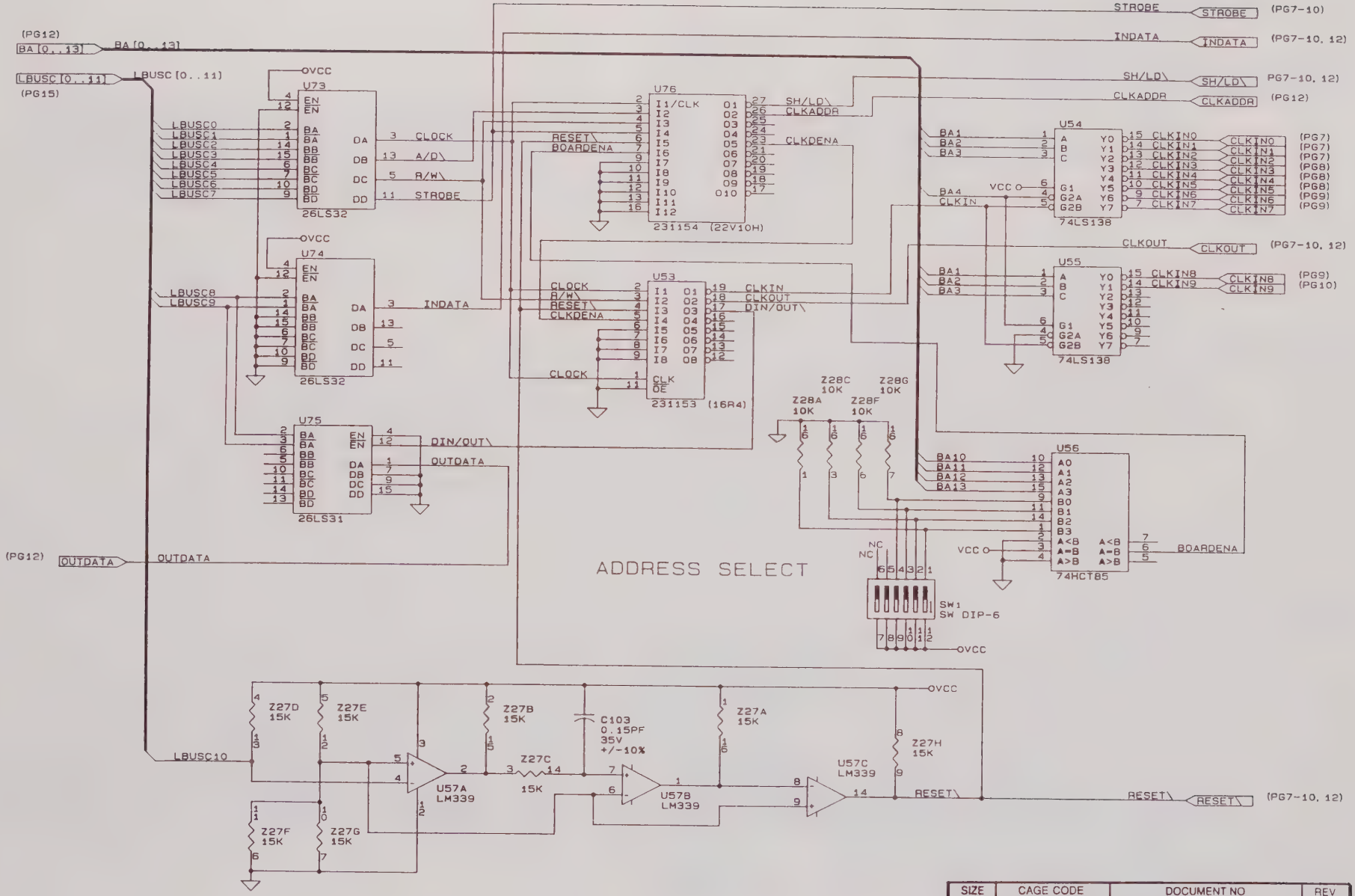

SIZE	CAGE CODE	DOCUMENT NO	REV
B	21793	435070	A
SCALE		SHEET 11 OF 16	

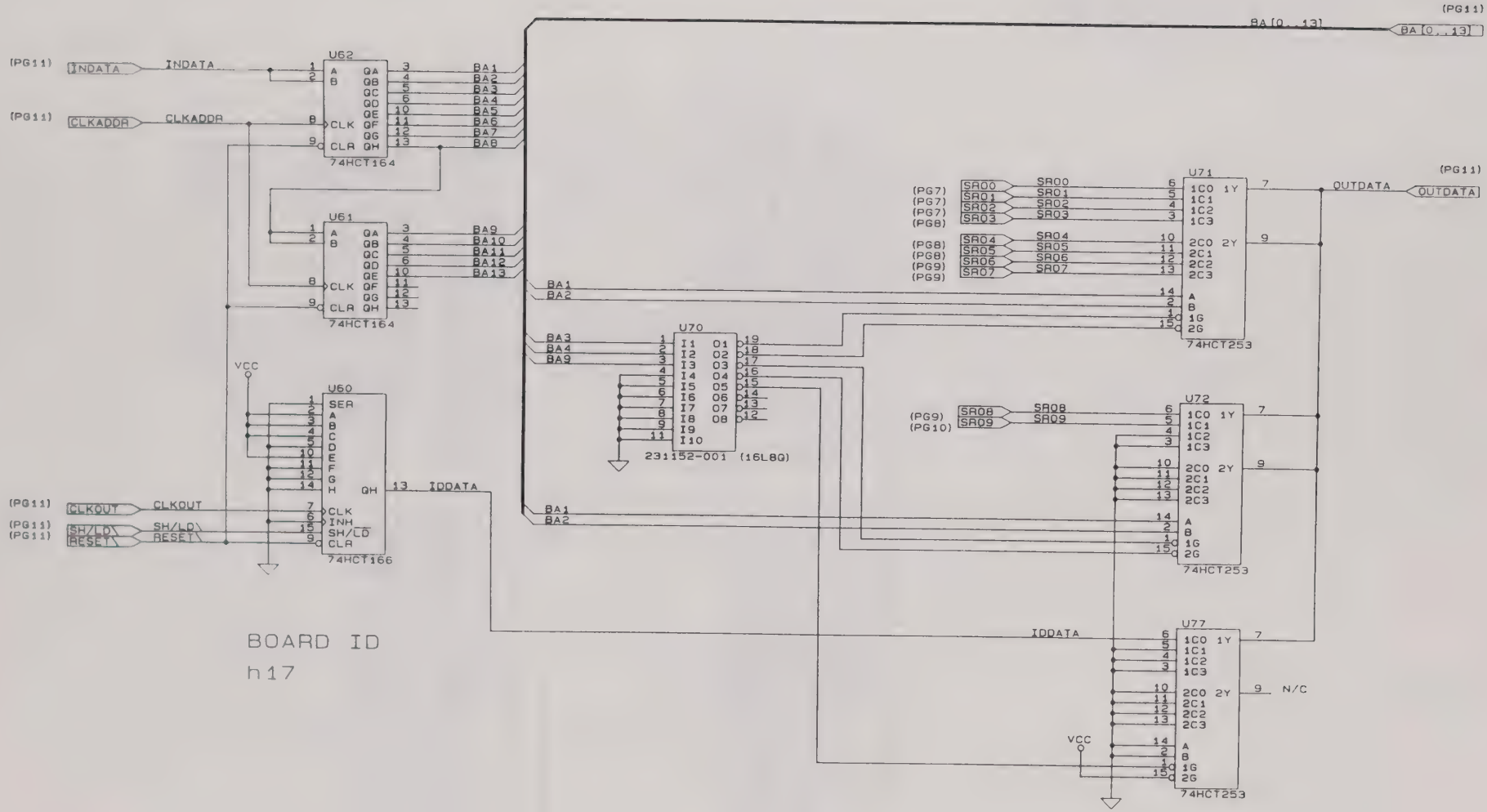

SIZE	CAGE CODE	DOCUMENT NO	REV
B	21793	435070	A
SCALE		SHEET 12 OF 16	

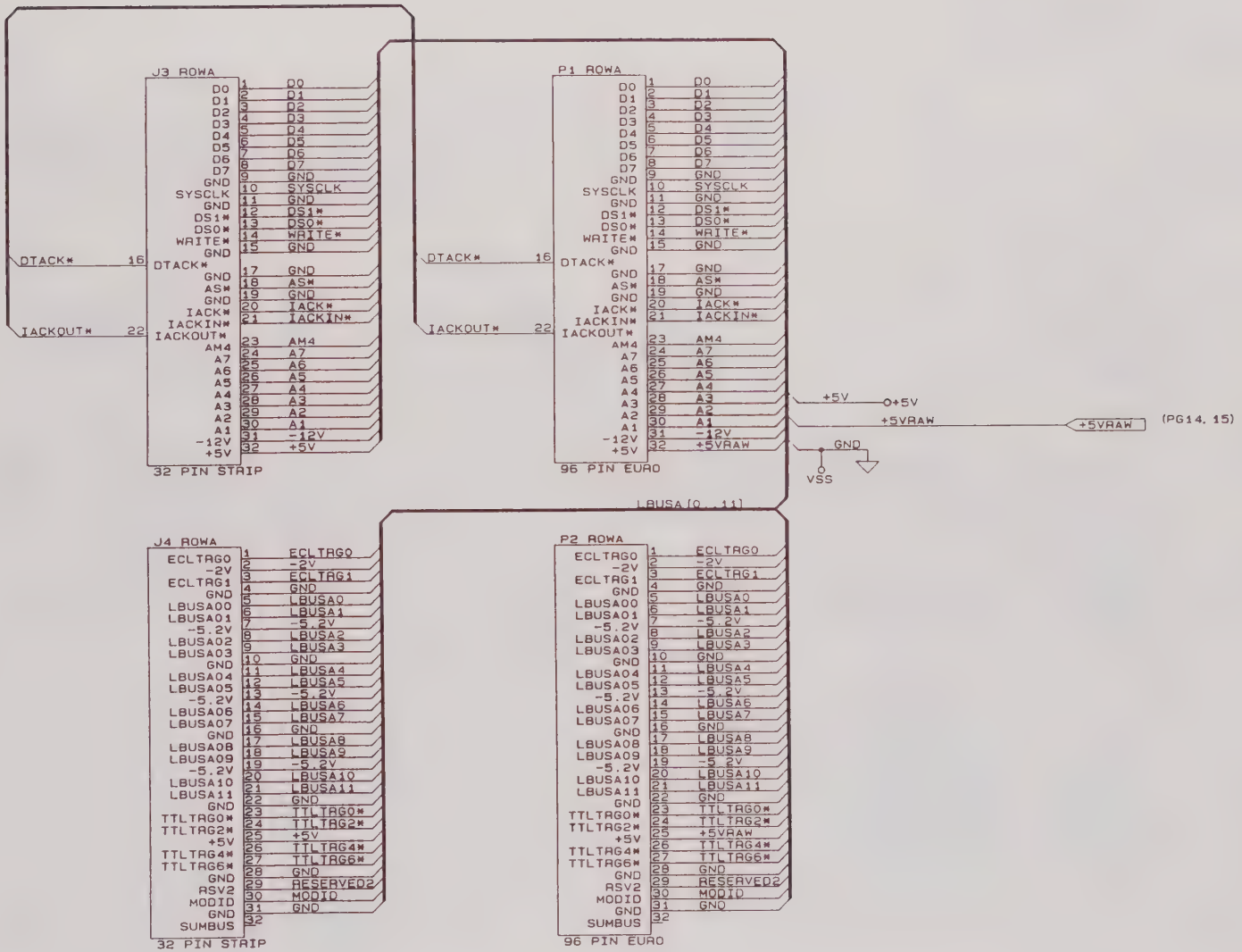

SIZE	CAGE CODE	DOCUMENT NO	REV
B	21793	435070	A
SCALE		SHEET 13 OF 16	

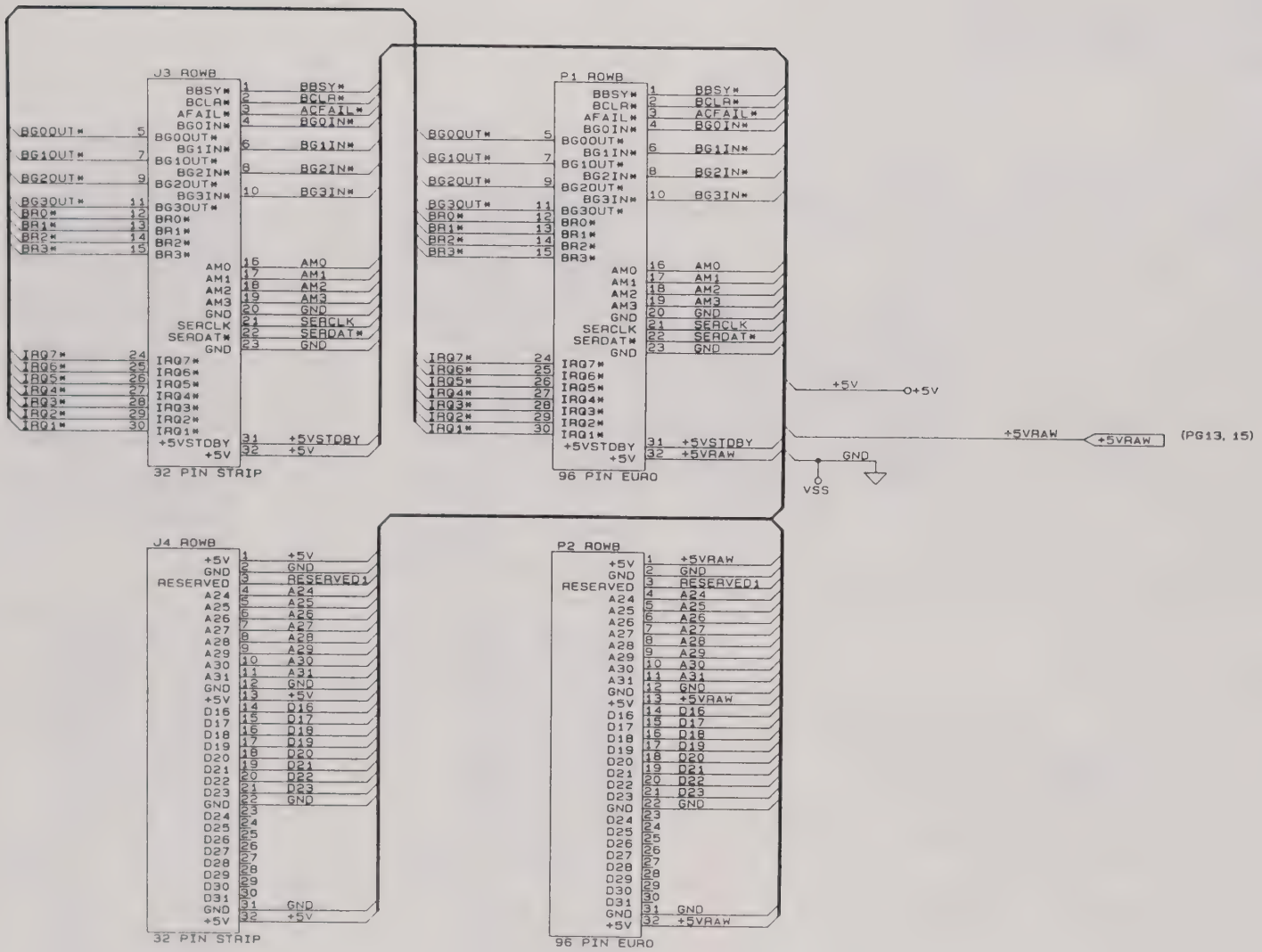

SIZE	CAGE CODE	DOCUMENT NO	REV
B	21793	435070	A
SCALE		SHEET 14 OF 16	

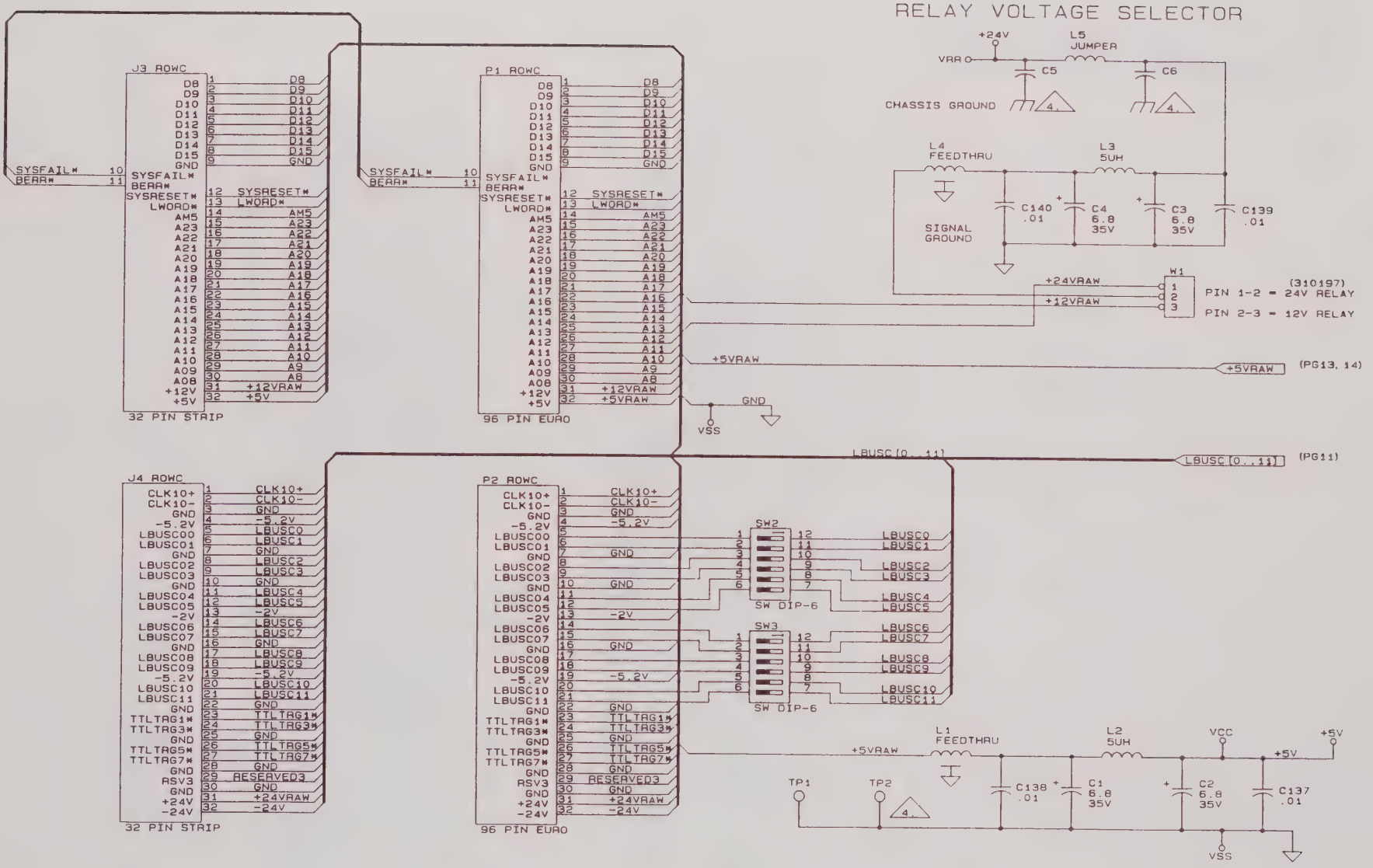

SIZE	CAGE CODE	DOCUMENT NO	REV
B	21793	435070	A
SCALE		SHEET 15 OF 16	

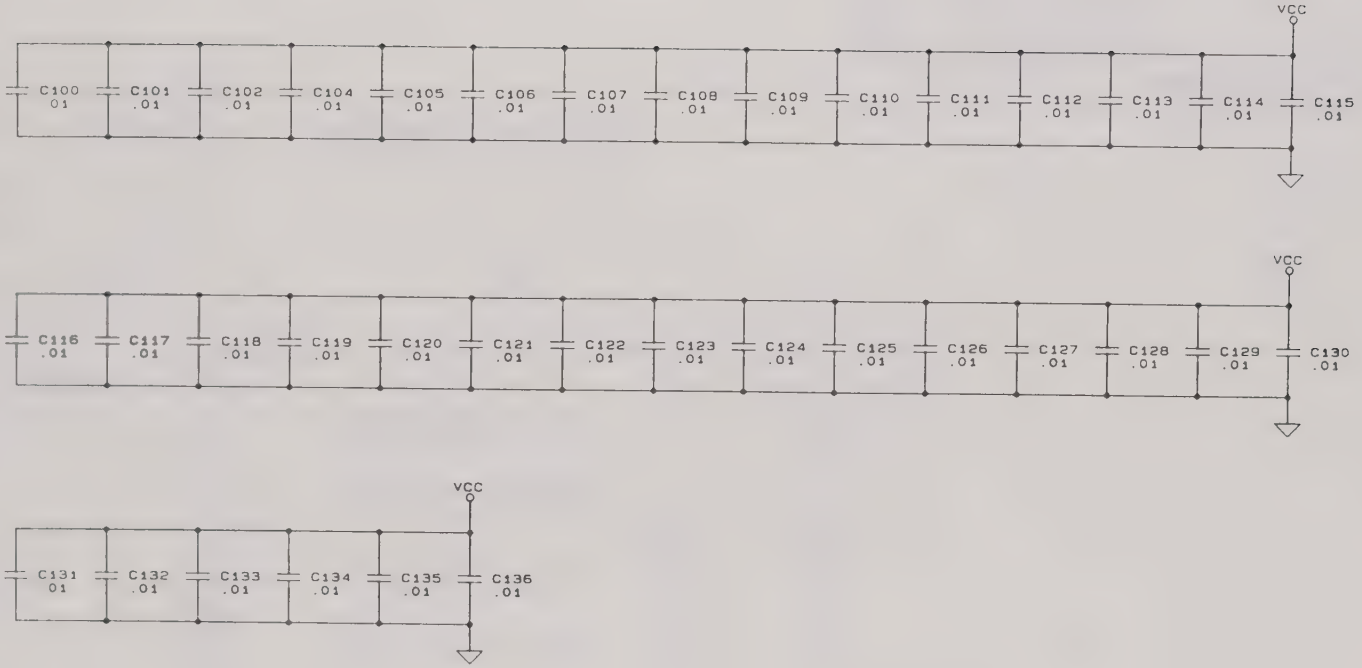

SIZE	CAGE CODE	DOCUMENT NO	REV
B	21793	435070	A
SCALE		SHEET 16 OF 16	

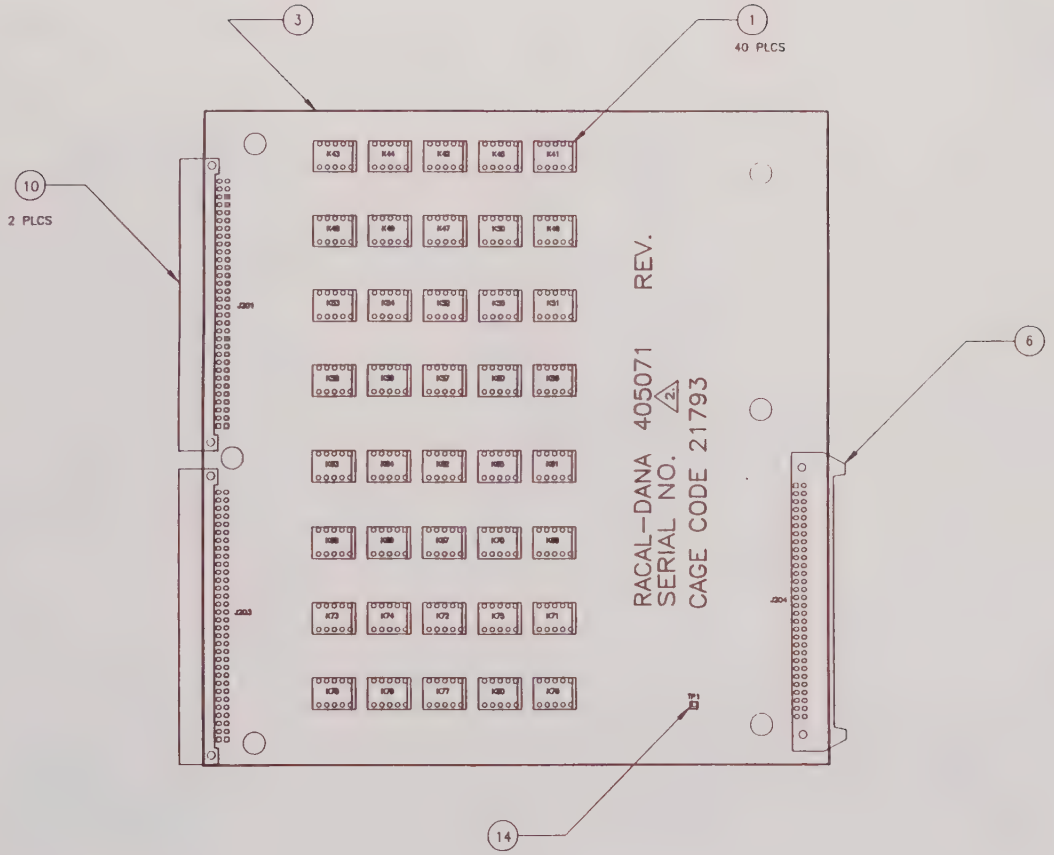

COMPONENT SIDE

2. INK STAMP SERIAL NUMBER AND CURRENT REVISION ON COMPONENT SIDE APPROX. WHERE SHOWN.
1. REFERENCE SCHEMATIC 435071.

PROPRIETARY NOTICE
THIS DOCUMENT AND THE TECHNICAL DATA HEREON DISCLOSED, ARE PROPRIETARY TO RACAL-DANA INSTRUMENTS INC. AND SHALL NOT, WITHOUT EXPRESS WRITTEN PERMISSION OF RACAL-DANA INSTRUMENTS INC BE USED, RELEASED OR DISCLOSED IN WHOLE OR IN PART, OR USED TO SOLICIT QUOTATIONS FROM A COMPETITIVE SOURCE OR USED FOR MANUFACTURE BY ANYONE OTHER THAN RACAL-DANA INSTRUMENTS INC. THE INFORMATION HEREON HAS BEEN DEVELOPED AT PRIVATE EXPENSE, AND MAY ONLY BE USED FOR PURPOSES OF ENGINEERING EVALUATION AND FOR INCORPORATION INTO TECHNICAL SPECIFICATIONS AND OTHER DOCUMENTS WHICH SPECIFY PROCUREMENT OF PRODUCTS FROM RACAL-DANA INSTRUMENTS INC

RACAL-DANA Instruments Inc.
4 GOODYEAR, IRVINE, CALIFORNIA 92714

DOCUMENT TITLE			
PCB ASSY, 1260-17D			
SIZE	CODE IDENT NO	DOCUMENT NO.	REV
D	21793	405071	A
SCALE		SHEET 1 OF 2	

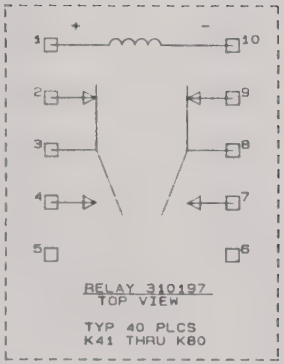

TP1
K80
J204
HIGHEST REF. DES.

1. RELAYS K41 THRU K80 ARE RACAL-DANA P/N 310197.
   ALL RELAYS SHOWN IN DE-ENERGIZED POSITION

NOTES UNLESS OTHERWISE SPECIFIED

PROPRIETARY NOTICE
THIS DOCUMENT AND THE TECHNICAL DATA HEREON DISCLOSED ARE PROPRIETARY TO RACAL DANA INSTRUMENTS INC AND SHALL NOT WITHOUT EXPRESS WRITTEN PERMISSION OF RACAL DANA INSTRUMENTS INC BE USED RELEASED OR DISCLOSED IN WHOLE OR IN PART OR USED TO SOLICIT QUOTATIONS FROM A COMPETITIVE SOURCE OR USED FOR MANUFACTURE BY ANYONE OTHER THAN RACAL DANA INSTRUMENTS INC THE INFORMATION HEREON HAS BEEN DEVELOPED AT PRIVATE EXPENSE AND MAY ONLY BE USED FOR PURPOSES OF ENGINEERING EVALUATION AND FOR INCORPORATION INTO TECHNICAL SPECIFICATIONS AND OTHER DOCUMENTS WHICH SPECIFY PROCUREMENT OF PRODUCTS FROM RACAL DANA INSTRUMENTS INC

RACAL-DANA Instruments Inc.
4 GOODYEAR IRVINE, CALIFORNIA 92714

DOCUMENT TITLE

SCHEM, 1260-17D

SIZE	CAGE CODE	DOCUMENT NO	REV
B	21793	435071	A

SCALE ———— SHEET 1 OF 6

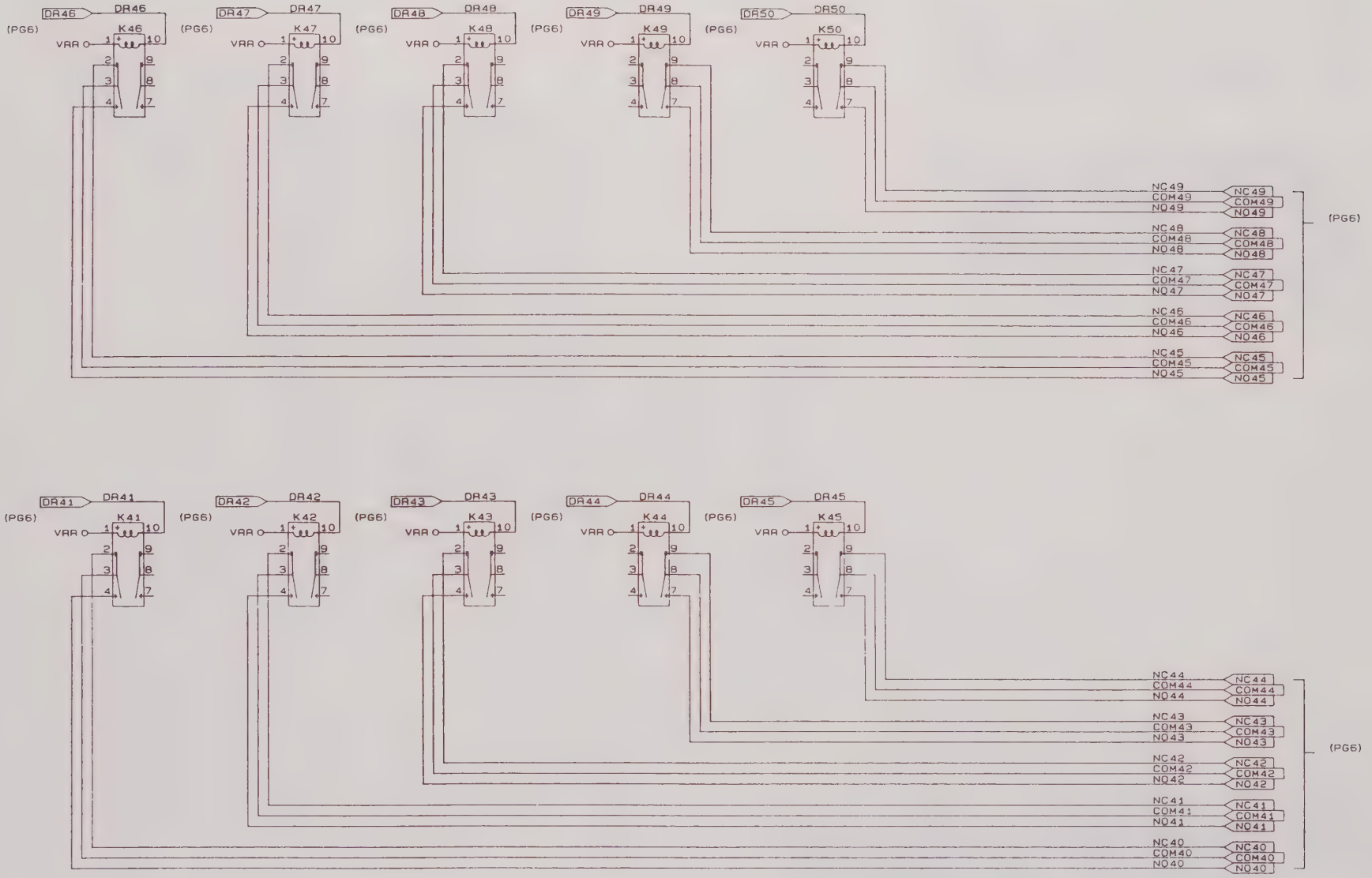

SIZE	CAGE CODE	DOCUMENT NO	REV
B	21793	435071	A
SCALE		SHEET 2	OF 6

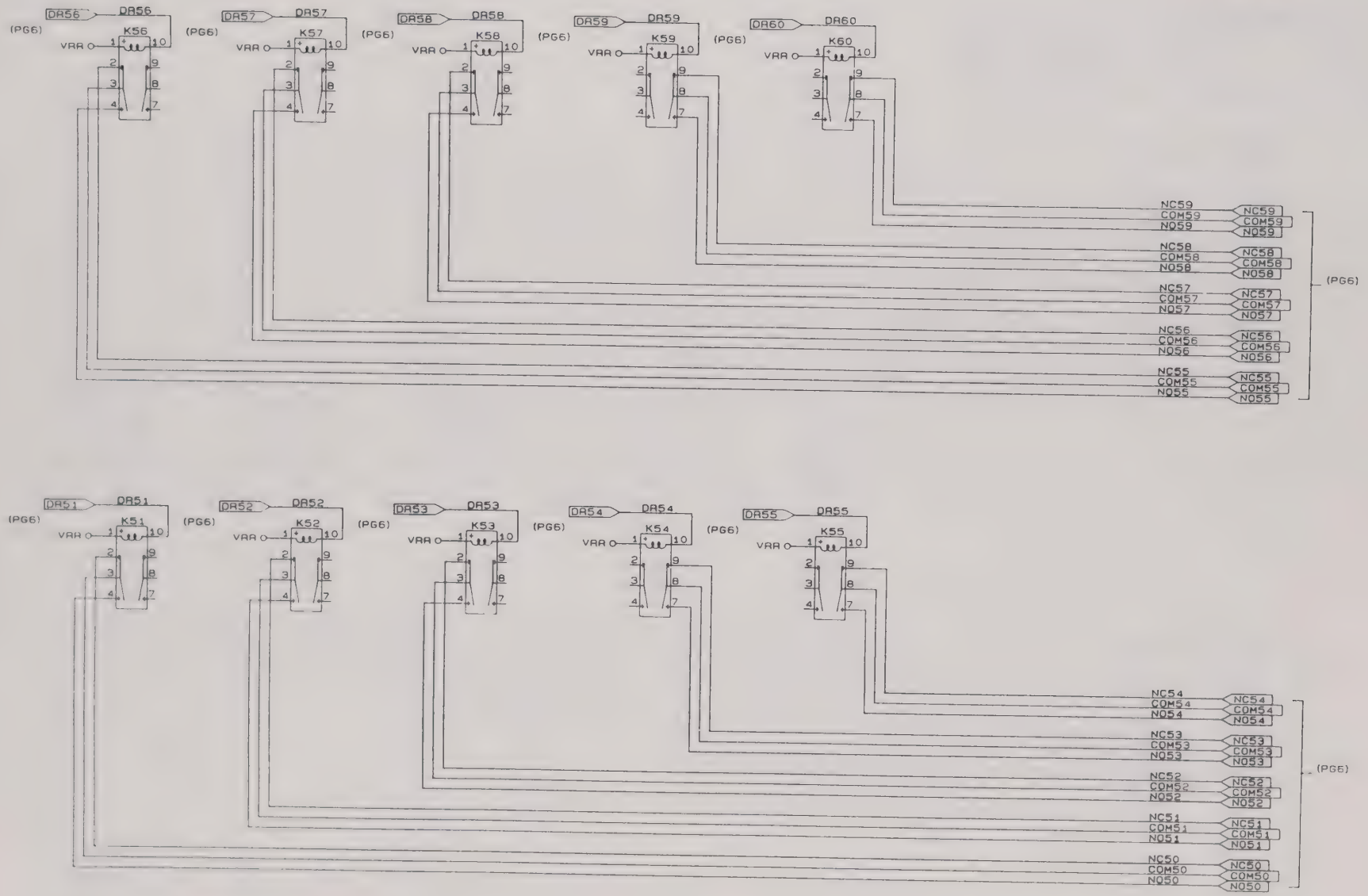

SIZE	CAGE CODE	DOCUMENT NO	REV
B	21793	435071	A
SCALE		SHEET 3 OF 6	

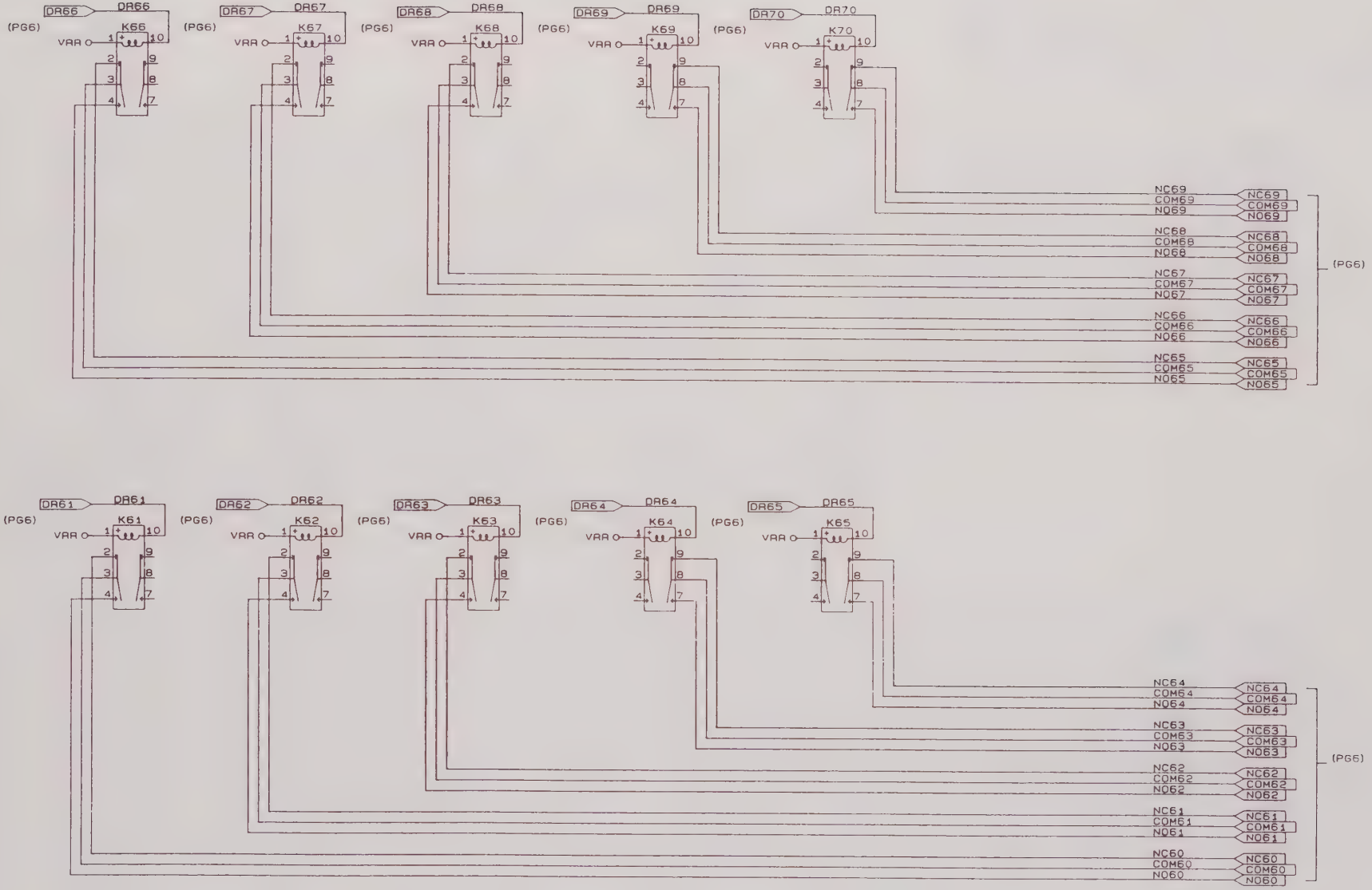

SIZE	CAGE CODE	DOCUMENT NO	REV
B	21793	435071	A
SCALE		SHEET 4 OF 6	

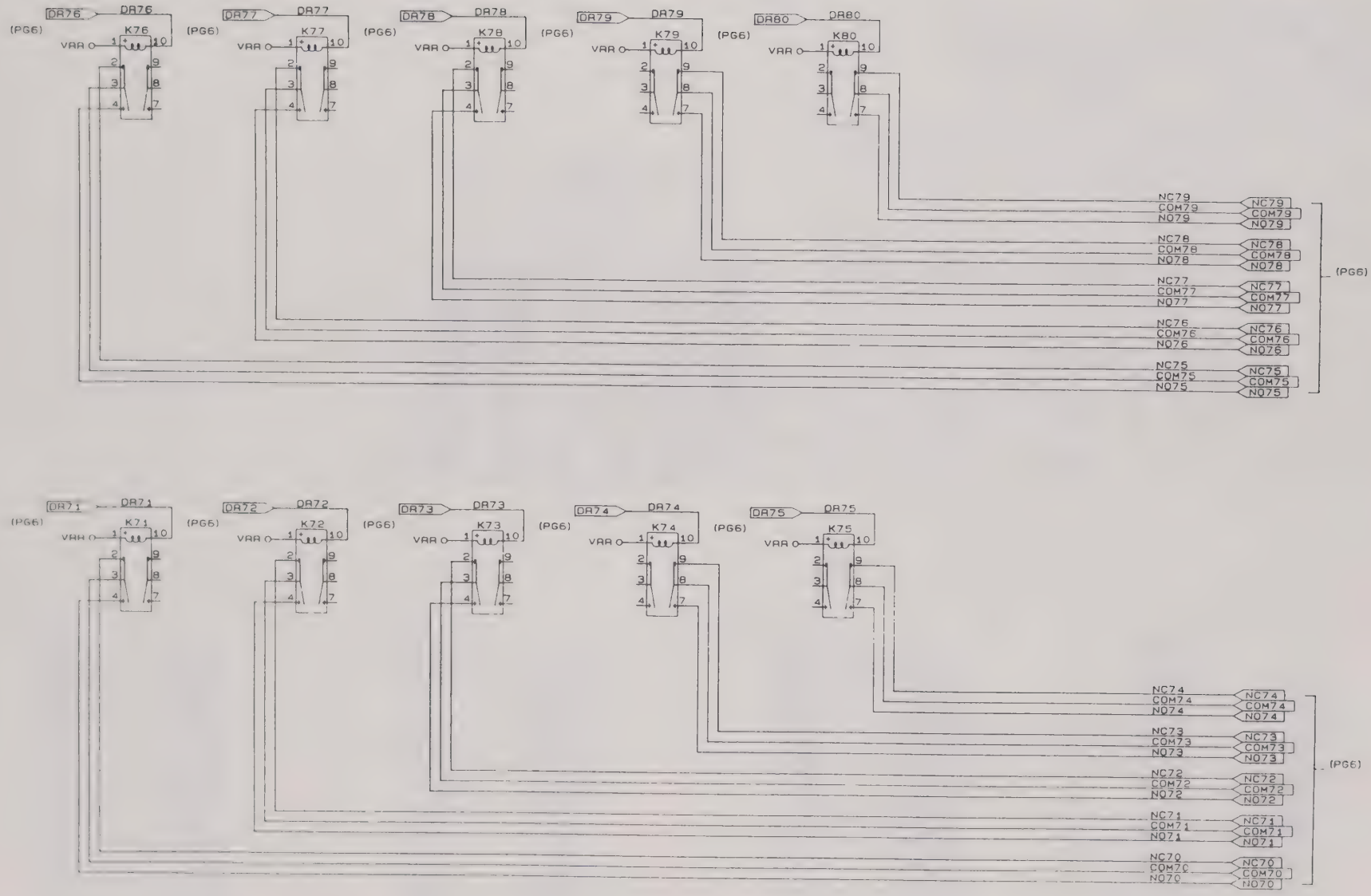

SIZE	CAGE CODE	DOCUMENT NO	REV
B	21793	435071	A
SCALE		SHEET 5 OF 6	

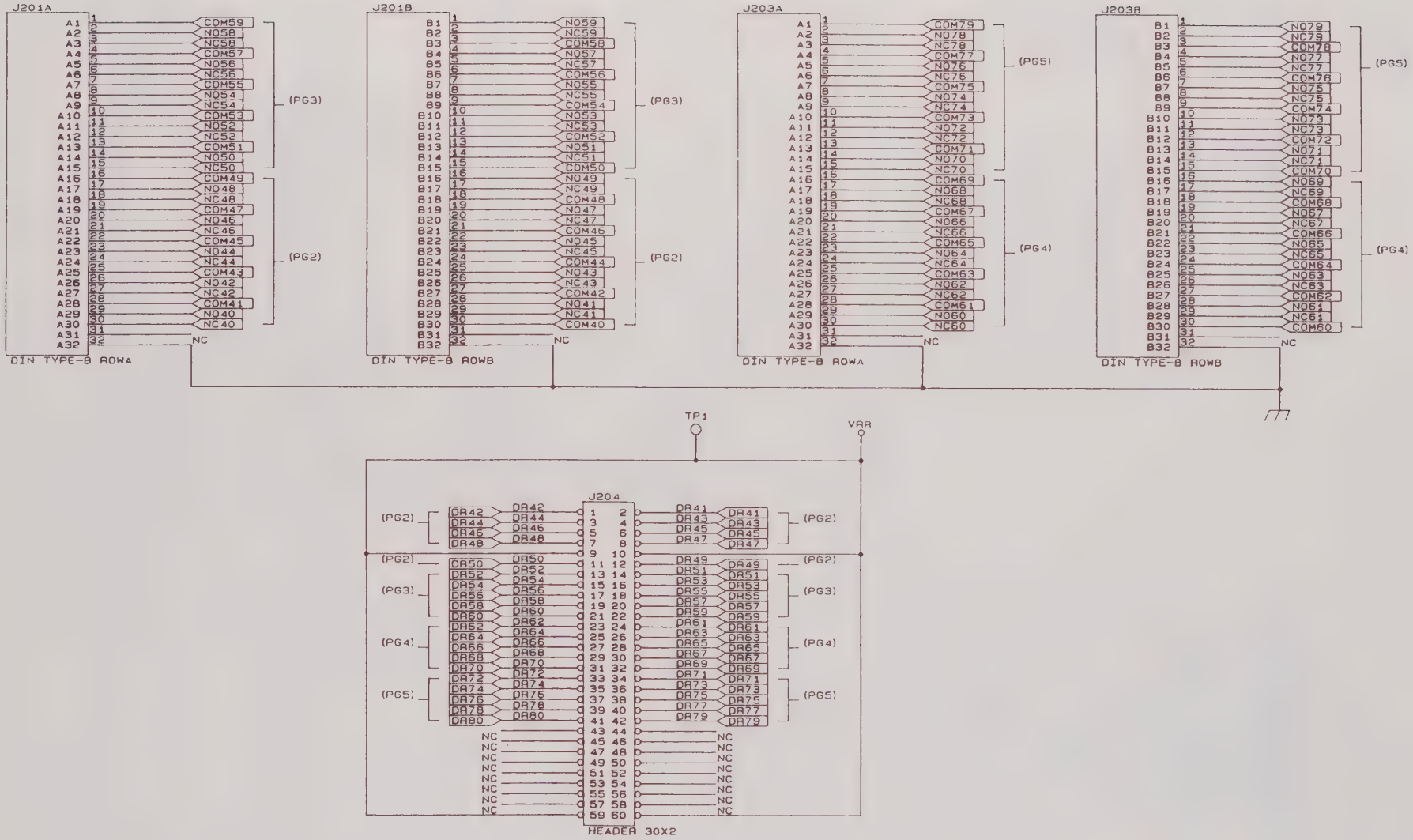

SIZE	CAGE CODE	DOCUMENT NO	REV
B	21793	435071	A
SCALE		SHEET 6 OF 6	

407165 - FINAL ASSY., 1260-17

REF DESIG	RACAL-DANA P/N	DESCRIPTION	FSC	MANUFACTURER'S P/N
{1}1	405070	PCB ASSY, 1260-17	21793	405070
{2}1	405071	PCB ASSY, 1260-17D	21793	405071
{5}1	455901	PANEL, RIGHT SIDE	21793	455901
{6}1	455779-003	PANEL, SIDE, LEFT	21793	455779-003
{7}1	455781	PANEL, REAR, SINGLE	21793	455781
{8}1	455784-001	PANEL, VXI TOP	21793	455784-001
{9}1	455784-002	PANEL, VXI BOTTOM	21793	455784-002
{10}1	455814-002	PANEL, FRONT	21793	455814-002
{22}1	611264	HANDLE, EXTRACTOR, BOTTOM	62559	20817-327
{23}1	611265	HANDLE, EXTRACTOR, TOP	62559	20817-328
{24}0.5	611266	MOUNTING HARDWARE, HANDLE	62559	21100-745
{25}32	615539	SCREW, PFH, 4-40X. 125	--	--
{27}2	616405	SCREW, PFH, M2.5-.45 X 12	---	-
{28}8	616480	SCREW, PFH, 4-40 X .375	-	-
{29}7	616251	SCREW, PPH, SEMS ASSY, 4-40X.250	78189	-
{32}1	921212-028	LABEL, VXI, 1260-17	21793	921212-028
{33}A/R	920962	LOCTITE, 242, MED STR.	05972	272
{35}1	921059	LABEL, CAUTION, STATIC	21793	921059
{36}1	921148	LABEL SET, VXI-VME	21793	921148
{37}1	921309	LABEL, VXI SWITCH ID	21793	921309
{38}1	404975-002	SHIPPING KIT, 1260-17	21793	404975-002

404975-002 - SHIPPING KIT, 1260-17

REF DESIG	RACAL-DANA P/N	DESCRIPTION	FSC	MANUFACTURER'S P/N
{1}2	455540	KEY, LOCKOUT, TTL, A/C	21793	455540
{2}2	455541	KEY, LOCKOUT, TTL, A/C	21793	455541
{3}2	455542	KEY, LOCKOUT, TTL, A/C	21793	455542
{6}4	602004	CONNECTOR, TYPE B, FEMALE, 64-PIN	06383	120-064-455
{7}4	602004-001	STRAIN RELIEF, WITH HANDLE	06383	120-000-032
{8}4	602004-002	PULL TAB, SOCKET, 2.5W	06383	LPT-50
{11}3	615013	SCREW, PPF, 2-56 X .188	-	-
{13}1	980673-013	MODULE MANUAL, 1260-17	21793	980673-013

407165-001 - FINAL ASSY., 1260-17A

REF DESIG	RACAL-DANA P/N	DESCRIPTION	FSC	MANUFACTURER'S P/N
{1}1	405070	PCB ASSY, 1260-17	21793	405070
{2}1	405071	PCB ASSY, 1260-17D	21793	405071
{5}1	455901	PANEL, RIGHT SIDE	21793	455901
{6}1	455779-003	PANEL, SIDE, LEFT	21793	455779-003
{7}1	455781	PANEL, REAR, SINGLE	21793	455781
{8}1	455784-001	PANEL, VXI TOP	21793	455784-001
{9}1	455784-002	PANEL, VXI BOTTOM	21793	455784-002
{10}1	455814-002	PANEL, FRONT	21793	455814-002
{22}1	611264	HANDLE, EXTRACTOR, BOTTOM	62559	20817-327
{23}1	611265	HANDLE, EXTRACTOR, TOP	62559	20817-328
{24}0.5	611266	MOUNTING HARDWARE, HANDLE	62559	21100-745
{25}32	615539	SCREW, PFH, 4-40X. 125	--	--
{27}2	616405	SCREW, PFH, M2.5-.45 X 12	---	-
{28}8	616480	SCREW, PFH, 4-40 X .375	-	-
{29}7	616251	SCREW, PPH, SEMS ASSY, 4-40X.250	78189	-
{32}1	921212-028	LABEL, VXI, 1260-17	21793	921212-028
{33}A/R	920962	LOCTITE, 242, MED STR.	05972	272
{35}1	921059	LABEL, CAUTION, STATIC	21793	921059
{36}1	921148	LABEL SET, VXI-VME	21793	921148
{37}1	921309	LABEL, VXI SWITCH ID	21793	921309
{39}1	404975-003	SHIPPING KIT, 1260-17A	21793	404975-003

404975-003 - SHIPPING, KIT 1260-17A

REF DESIG	RACAL-DANA P/N	DESCRIPTION	FSC	MANUFACTURER'S P/N
{1}2	455540	KEY, LOCKOUT, TTL, A/C	21793	455540
{2}2	455541	KEY, LOCKOUT, TTL, A/C	21793	455541
{3}2	455542	KEY, LOCKOUT, TTL, A/C	21793	455542
{6}4	602159-064	CONNECTOR HOUSING, 64-PIN, DIN-B, PLUG	OG8R9	09020643214
{10}256	602159-900	CONTACT, CRIMP, SKT, 28-24 AWG	OG8R9	09020008484
{11}3	615013	SCREW, PPF, 2-56 X .188	-	-
{13}1	980673-013	MODULE MANUAL, 1260-17	21793	980673-013

405070 - PCB ASSY., 1260-17

REF DESIG	RACAL-DANA P/N	DESCRIPTION	FSC	MANUFACTURER'S P/N
C1-C4	110126	CAP, TANTA, 6.8UF, 35V, 20 PERCENT	05397	T355F685M035A5
C100-C102	R-21-1801	CAP, CHIP, 10 NF	95275	VJ1206Y103MF
C103	110165	CAP, TANTA, .15 MF, 35V, 10PCT	05397	T355A154K035AS
C104-C140	R-21-1801	CAP, CHIP, 10 NF	95275	VJ1206Y103MF
J3	601925	CONNECTOR, PCB, RECEPT, 3 ROW, 96P	52072	618008
J4	601925	CONNECTOR, PCB, RECEPT, 3 ROW, 96P	52072	618008
J200	602005	CONNECTOR, DIN TYPE B, MALE, 64 PIN	06383	100-064033B
J202	602005	CONNECTOR, DIN TYPE B, MALE, 64 PIN	06383	100-064033B
K1-K40	310197	RELAY, 2 FORM C	61529	TQ2E-24V
L1	100164	CAP, FEED-THRU,800PF, 50V	00779	842448-2
L2	310193	CHOKE, SHIELDED, 5UH	91637	IH-5-5-10
L3	310193	CHOKE, SHIELDED, 5UH	91637	IH-5-5-10
L4	100164	CAP, FEED-THRU,800PF, 50V	00779	842448-2
L5	600245	JUMPER, INSULATED	52210	L-2007-1
P1	601675-001	CONNECTOR, EUROCARD, 96 PIN MOD.	21793	601675-001
P2	601675-001	CONNECTOR, EUROCARD, 96 PIN MOD.	21793	601675-001
P55	602023	CABLE ASSY., 1DC 60 PIN	21793	602023
SW1-SW3	601969	SWITCH, DIP 6 POS, LOW PROFILE	65832	K406S
TP1	601197	POST, TEST, .025 SQ	00779	6-87022-6
U1	231131	IC, DIGITAL, SHIFT REGISTER	18324	PC74HCT164D
U2	231130	IC, DIGITAL, FLIP FLOP	18324	PC74HC273
U3	231098	IC, SOIC TRANSISTOR	56289	ULN-2803LW
U4	231120	IC, 8-BIT, PARALLEL/SERIAL OUT S.R.	18324	74HCT166D
U5	231131	IC, DIGITAL, SHIFT REGISTER	18324	PC74HCT164D
U6	231130	IC, DIGITAL, FLIP FLOP	18324	PC74HC273
U7	231098	IC, SOIC TRANSISTOR	56289	ULN-2803LW
U8	231120	IC, 8-BIT, PARALLEL/SERIAL OUT S.R.	18324	74HCT166D
U9	231131	IC, DIGITAL, SHIFT REGISTER	18324	PC74HCT164D
U10	231130	IC, DIGITAL, FLIP FLOP	18324	PC74HC273
U11	231098	IC, SOIC TRANSISTOR	56289	ULN-2803LW
U12	231120	IC, 8-BIT, PARALLEL/SERIAL OUT S.R.	18324	74HCT166D
U13	231131	IC, DIGITAL, SHIFT REGISTER	18324	PC74HCT164D
U14	231130	IC, DIGITAL, FLIP FLOP	18324	PC74HC273
U15	231098	IC, SOIC TRANSISTOR	56289	ULN-2803LW
U16	231120	IC, 8-BIT, PARALLEL/SERIAL OUT S.R.	18324	74HCT166D
U17	231131	IC, DIGITAL, SHIFT REGISTER	18324	PC74HCT164D
U18	231130	IC, DIGITAL, FLIP FLOP	18324	PC74HC273
U19	231098	IC, SOIC TRANSISTOR	56289	ULN-2803LW
U20	231120	IC, 8-BIT, PARALLEL/SERIAL OUT S.R.	18324	74HCT166D
U21	231131	IC, DIGITAL, SHIFT REGISTER	18324	PC74HCT164D
U22	231130	IC, DIGITAL, FLIP FLOP	18324	PC74HC273
U23	231098	IC, SOIC TRANSISTOR	56289	ULN-2803LW
U24	231120	IC, 8-BIT, PARALLEL/SERIAL OUT S.R.	18324	74HCT166D
U25	231131	IC, DIGITAL, SHIFT REGISTER	18324	PC74HCT164D
U26	231130	IC, DIGITAL, FLIP FLOP	18324	PC74HC273
U27	231098	IC, SOIC TRANSISTOR	56289	ULN-2803LW
U28	231120	IC, 8-BIT, PARALLEL/SERIAL OUT S.R.	18324	74HCT166D
U29	231131	IC, DIGITAL, SHIFT REGISTER	18324	PC74HCT164D
U30	231130	IC, DIGITAL, FLIP FLOP	18324	PC74HC273
U31	231098	IC, SOIC TRANSISTOR	56289	ULN-2803LW
U32	231120	IC, 8-BIT, PARALLEL/SERIAL OUT S.R.	18324	74HCT166D
U33	231131	IC, DIGITAL, SHIFT REGISTER	18324	PC74HCT164D
U34	231130	IC, DIGITAL, FLIP FLOP	18324	PC74HC273
U35	231098	IC, SOIC TRANSISTOR	56289	ULN-2803LW
U36	231120	IC, 8-BIT, PARALLEL/SERIAL OUT S.R.	18324	74HCT166D
U37	231131	IC, DIGITAL, SHIFT REGISTER	18324	PC74HCT164D
U38	231130	IC, DIGITAL, FLIP FLOP	18324	PC74HC273
U39	231098	IC, SOIC TRANSISTOR	56289	ULN-2803LW
U40	231120	IC, 8-BIT, PARALLEL/SERIAL OUT S.R.	18324	74HCT166D

405070 - PCB ASSY., 1260-17

REF DESIG	RACAL-DANA P/N	DESCRIPTION	FSC	MANUFACTURER'S P/N
U53	231153	IC, PROGRAMMED PLA	21793	231153
U54	231094	IC, DEMUX DECODER	18324	N74LS138D
U55	231094	IC, DEMUX DECODER	18324	N74LS138D
U56	231135	IC, DIGITAL, 4-BIT COMPARATOR	18324	PC74HCT85D
U57	231093	IC, QUAD COMPARATOR	04713	LM339D
U60	231120	IC, 8-BIT, PARALLEL/SERIAL OUT S.R.	18324	74HCT166D
U61	231131	IC, DIGITAL, SHIFT REGISTER	18324	PC74HCT164D
U62	231131	IC, DIGITAL, SHIFT REGISTER	18324	PC74HCT164D
U70	231152-001	IC, DIGITAL 16L8, PAL	21793	231152-001
U71	231147	IC, MULTIPLEXER	04713	74HC253D
U72	231147	IC, MULTIPLEXER	04713	74HC253D
U73	231096	IC, QUAD DIFF RECEIVER	01295	AM26LS32ACD
U74	231096	IC, QUAD DIFF RECEIVER	01295	AM26LS32ACD
U75	231125	IC, DIGITAL, LINE DRIVER	27014	DS26LS31MN
U76	231154	IC, PROGRAMMED PLA	21793	231154
U77	231147	IC, MULTIPLEXER	04713	74HC253D
Z1	080119	RES NETWORK, 220K	91637	SOMC-1603-224K
Z2	080117	RES NETWORK, 16P8R, 47K	73138	628-AL-473J
Z3	080119	RES NETWORK, 220K	91637	SOMC-1603-224K
Z4	080117	RES NETWORK, 16P8R, 47K	73138	628-AL-473J
Z5	080119	RES NETWORK, 220K	91637	SOMC-1603-224K
Z6	080117	RES NETWORK, 16P8R, 47K	73138	628-AL-473J
Z7	080119	RES NETWORK, 220K	91637	SOMC-1603-224K
Z8	080117	RES NETWORK, 16P8R, 47K	73138	628-AL-473J
Z9	080119	RES NETWORK, 220K	91637	SOMC-1603-224K
Z10	080117	RES NETWORK, 16P8R, 47K	73138	628-AL-473J
Z11	080119	RES NETWORK, 220K	91637	SOMC-1603-224K
Z12	080117	RES NETWORK, 16P8R, 47K	73138	628-AL-473J
Z13	080119	RES NETWORK, 220K	91637	SOMC-1603-224K
Z14	080117	RES NETWORK, 16P8R, 47K	73138	628-AL-473J
Z15	080119	RES NETWORK, 220K	91637	SOMC-1603-224K
Z16	080117	RES NETWORK, 16P8R, 47K	73138	628-AL-473J
Z17	080119	RES NETWORK, 220K	91637	SOMC-1603-224K
Z18	080117	RES NETWORK, 16P8R, 47K	73138	628-AL-473J
Z19	080119	RES NETWORK, 220K	91637	SOMC-1603-224K
Z20	080117	RES NETWORK, 16P8R, 47K	73138	628-AL-473J
Z27	080114	RES NETWORK, 16P8R, 15K	73138	628-AL-153J
Z28	080120	RES NETWORK, 10K	11236	767-161R10K
{43}1	401951	PCB ASSY., LBUS JUMPER	21793	401951
{44}1	401951-003	PCB ASSY., P3 JUMPER	21793	401951-003
{45}1	415070	PCB, 1260-17 (UNLOADED)	21793	415070
{48}A/R	500022	WIRE, BARE COPPER/TIN, 22 GA	21793	500022
{49}A/R	500204	WIRE, TEFLON, SOLID, 28 GA, WHT	04946	1100-32-C-9
{67}6	610257	STANDOFF, SWAGE, 1/4D, 4-40 X .31	06540	9534BB04403A
{70}4	611258-001	STANDOFF, SWAGE 4-40 X .170	06540	8091-11B-B-440-28

20 DPST

1260-20 POWER MODULE

1260 VXI
SWITCHING CARD

RACAL-DANA

RACAL-DANA INSTRUMENTS INC.

4 Goodyear Street, P.O. Box C-19541, Irvine, CA 92713
Telephone: 714/859-8999, Fax: 714/859-2505

RACAL INSTRUMENTS, LTD.

480 Bath Road, Slough, Berkshire, SL1 6BE, England
Telephone: 44-628 604455, Fax: 44-628 662017

RACAL SYSTEMS ELECTRONIQUE S.A.

18 Avenue Dutartre, 78150 Le Chesnay, France
Telephone: 33-1-3-955-8888, Fax: 33-1-3-955-6735

RACAL ELEKTRONIK SYSTEMS GmbH

Frankenforster Strasse 21, D-5060 Bergisch-Gladbach 1, Federal Republic of Germany
Telephone: 49-22-04-60081, Fax: 49-22-04-21491

RACAL SYSTEMS ELETTRONICA

Via Roma, 108/PAL, E1, 20060 Cassina de Pecchi, Milan, Italy
Telephone: 39-2-9514717/737/770, Fax: 39-2-9514522

RACAL

PUBLICATION DATE: APRIL 1992

Copyright ©1992 by Racal-Dana Instruments Inc. Printed in the United States of America. All rights reserved.
This book or parts thereof may not be reproduced in any form without written permission of the publishers.

TABLE OF CONTENTS

1260-20 POWER MODULE

1.0	1260-20 Module Specification	1-1
2.0	Installation Instructions	1-3
2.1	Unpacking and Inspection	1-3
2.2	Reshipment Instructions	1-3
2.3	Option 01 Installation	1-3
2.4	Module Installation	1-3
3.0	1260-20 Module Specific Syntax	1-4
3.1	Syntax	1-4
4.0	Drawings	1-6
5.0	Parts List	1-18

FIGURES

1-1	1260-20 Relay Diagram	1-1
3-1	1260-20 Pin Connections	1-5

1.0 1260-20 Module Specification

The 1260-20 Power Module is a 20 Channel Double-pole, Single-throw power switching module.

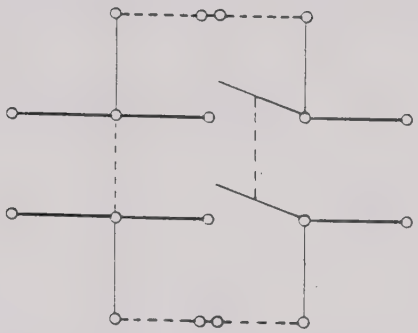

Model 1260-20. Twenty independent relays. One channel is shown, with provision for addition of series and shunt elements.

Figure 1-1, 1260-20 Relay Diagram

Specifications

Switch Configuration	20 DPST Relays
User Connector	Positronics GMCT41FOE100JC
Maximum Switchable Voltage	250 VDC, 250 VAC RMS or 350 VAC pk

Maximum Switchable Current (DC or AC RMS)

Per Channel:	8 A
Per Module:	30 A

Maximum Switchable Power

Per Terminal:	150 W DC, 1250 VA
Per Channel:	240 W DC, 2000 VA
Per Module:	900 W DC, 7500 VA

DC Performance

Path Resistance	150 mΩ at 5A DC 50 mΩ Typical
Isolation (High-Low)	> 10^9 ohms

AC Performance

Capacitance	
Open Channel:	<20 pF
Channel-Chassis:	<20 pF
Hi-Lo:	<50 pF
Bandwidth (-3 dB, 50 ohm Termination)	30 MHz (typical)
Insertion Loss (50 ohm Termination):	<0.10 dB at 100 kHz <0.10 dB at 1 MHz <1.5 dB at 10 MHz
Crosstalk, (50 ohm Termination)	<-60 dB at 100 kHz <-40 dB at 1 MHz <-20 dB at 10 MHz
Switching Time	≤ 15 ms

Cooling Requirements

Airflow:	4 litres / sec
Backpressure:	0.5 mm H_2O
Power Requirements (I_{Pm})	+5 V = 2.5 A +24 V = 10 mA per relay
Weight	1.14 Kg (2.51 lbs) without Option 01 (Smart Card) 1.30 Kg (2.875 lbs) with Option 01 (Smart Card)
Minimum Option 01 Firmware Revision	2.1

2.0 Installation Instructions

2.1 Unpacking and Inspection

Before unpacking the switching module, check the exterior of the shipping carton for any signs of damage. All irregularities should be noted on the shipping bill. Remove the instrument from its carton, preserving the factory packaging as much as possible. Inspect the switching module for any defect or damage. Immediately notify the carrier if any damage is apparent. Have a qualified person check the instrument for safety before use.

2.2 Reshipment Instructions

Use the original packing when returning the switching module to Racal-Dana for calibration or servicing. The original shipping carton and the instrument's plastic foam will provide the necessary support for safe reshipment. If the original packing is unavailable, wrap the switching module in plastic sheeting and use plastic spray foam to surround and protect the instrument. Reship in either the original or a new shipping carton.

2.3 Option 01 Installation

Installation of the Option 01 to the 1260-20 is described in the Installation section of the 1260 Series VXI Switching Cards Manual.

2.4 Module Installation

Installation of the 1260-20 Switching Module into a VXI mainframe, including the setting of DIP switches, is described in the Installation section of the 1260 Series VXI Switching Cards Manual. The ID byte DIP switches, SW1-5 and SW1-6, should be set OFF.

3.0 1260-20 Module Specific Syntax

The Module Specific Syntax for the 1260-20 is required in the use of the OPEN and CLOSE commands. It will also appear in data output by the 1260 Master in response to the PDATAOUT and PSETUP commands.

3.1 Syntax

The Module Specific Syntax for the 1260-20 Power Switching module is as follows:

<module address>.<switchnumber>

where <module address> is the address.

<switchnumber> is the reference number of the relay to be closed, value 0 - 19.

NOTE

The <module address> used here is not the VXIbus defined logical address of the 1260 Master. It is peculiar to the 1260 Series, and describes the switching module in relation to the Master. This address corresponds to the binary value of the switch setting of SW1 on the switching module PCB.

3.1.1

The 1260-20 pin connections made by each <switchnumber> are as follows:

J200

<switchnumber>	Pin Connections	
0	A to D,	C to K
1	E to H,	J to L
2	B to F,	M to N
3	P to T,	S to Y
4	U to W,	X to e
5	V to a,	R to Z
6	b to j,	c to d
7	m to v,	n to h
8	p to r,	f to k
9	x to s,	t to u

J201.

<switchnumber>	Pin Connections	
10	A to D,	C to K
11	E to H,	J to L
12	B to F,	M to N
13	P to T,	S to Y
14	U to W,	X to e
15	V to a,	R to Z
16	b to j,	c to d
17	m to v,	n to h
18	p to r,	f to k
19	x to s,	t to u

Refer to Figure 3-1 for the pin configurations of connectors J200 and J201.

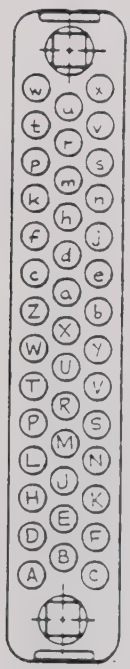

Figure 3-1 , 1260-20 Pin Connections

3.1.2 The Racal-Dana part number for the mating connectors for 1260-20 connectors J200 and J201 is 601850, and the pins required for the mating connector are Racal-Dana Part Number 601859. 41 pins are required to fully populate each mating conector.

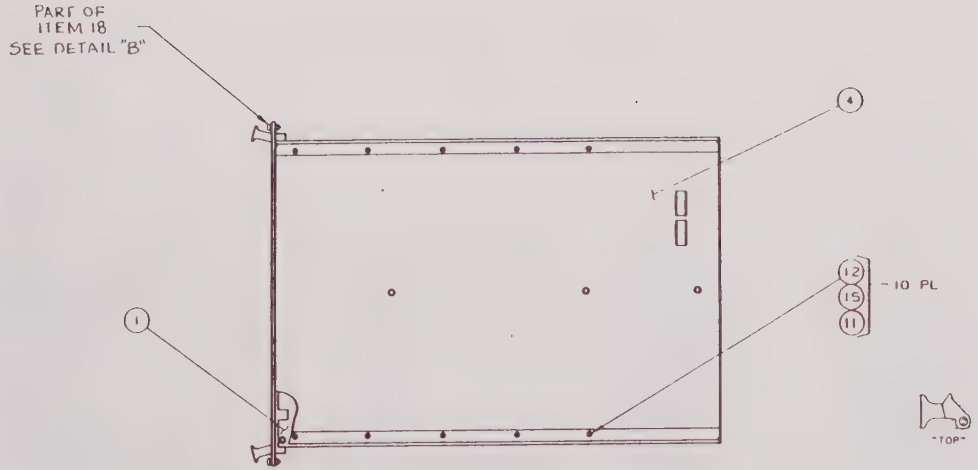

BOTTOM VIEW

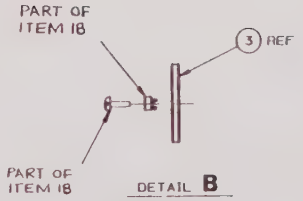

DETAIL **B**
SCALE 2/1
"SIDE VIEW"

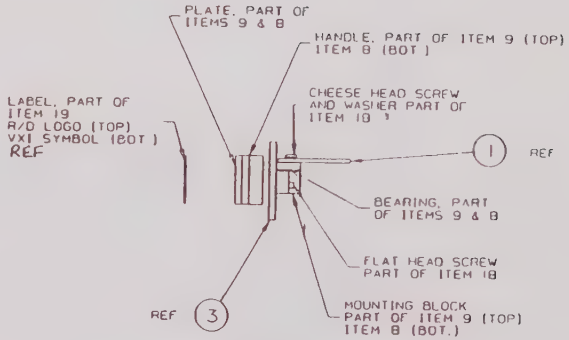

DETAIL **A**
SCALE 2/1
SIDE VIEW

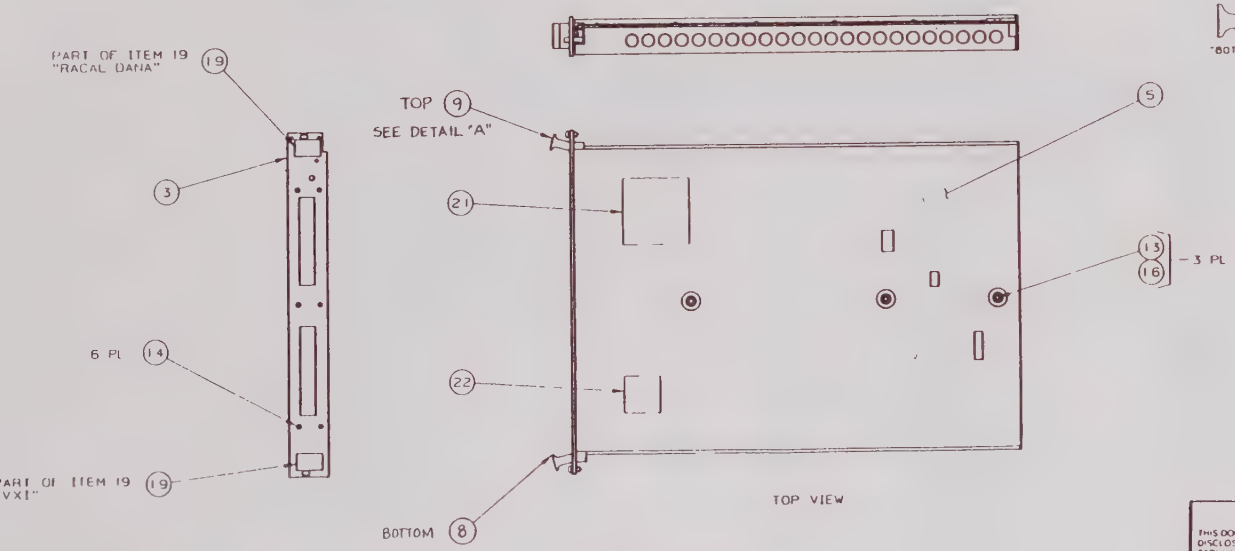

TOP VIEW

PROPRIETARY NOTICE
THIS DOCUMENT AND THE TECHNICAL DATA HEREON DISCLOSED ARE PROPRIETARY TO RACAL DANA INSTRUMENTS INC AND SHALL NOT WITHOUT EXPRESS WRITTEN PERMISSION OF RACAL DANA INSTRUMENTS INC BE USED RELEASED OR DISCLOSED IN WHOLE OR IN PART OR USED TO SOLICIT QUOTATIONS FROM A COMPETITIVE SOURCE OR USED FOR MANUFACTURE BY ANYONE OTHER THAN RACAL DANA INSTRUMENTS INC THE INFORMATION HEREON HAS BEEN DEVELOPED AT PRIVATE EXPENSE AND MAY ONLY BE USED FOR PURPOSES OF ENGINEERING EVALUATION AND FOR INCORPORATION INTO TECHNICAL SPECIFICATIONS AND OTHER DOCUMENTS WHICH SPECIFY PROCUREMENT OF PRODUCTS FROM RACAL DANA INSTRUMENTS INC

RACAL-DANA Instruments Inc.
4 GOODYEAR, IRVINE, CALIFORNIA 92714

DOCUMENT TITLE

FINAL ASSY., 1260-20

SIZE	CODE IDENT NO	DOCUMENT NO	REV
D	21793	404713	B

SCALE/2 | SHEET 1 OF 2

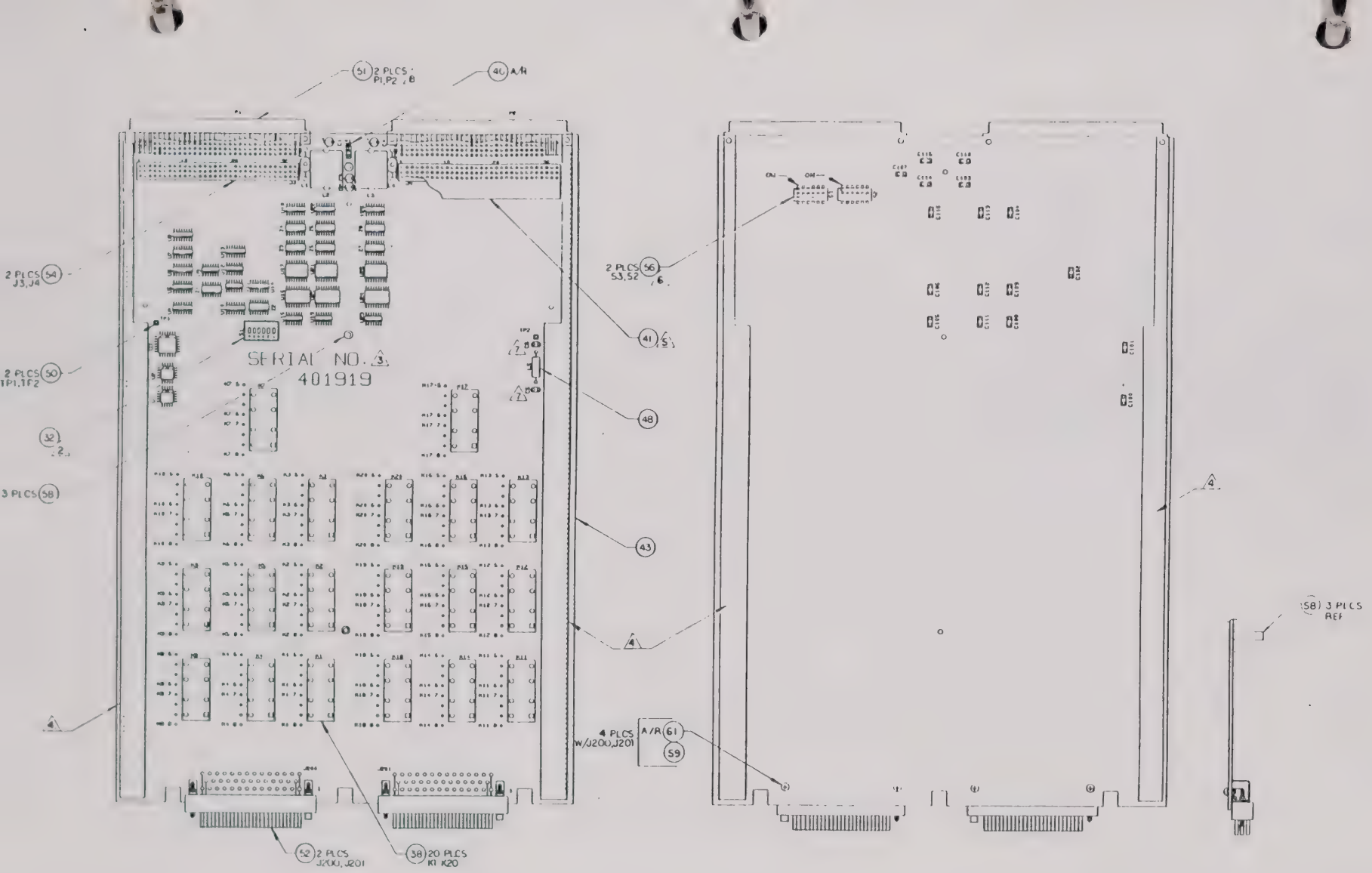

8. P1 AND P2 MUST BE INSTALLED FLUSH AT RIGHT ANGLES TO PC BOARD
7. C5 AND C6 ARE NOT INSTALLED
6. SET ALL S2,S3 SWITHES TO (ON) OR (CLOSED) OR (1) POSITION DO NOT WAVE SOLDER
5. INSTALL (ITEM 41) PCB INTO (ITEM 54) J4
4. AREAS INDICATED TO BE FLAT AND FREE FROM SOLDER (BOTH SIDES)
3. INK STAMP SERIAL NO ON COMPONENT SIDE IN INDICATED AREA.
2. SET S1 TO LOGICAL ADDRESS 1 PER TABLE 1
1. REFERENCE SCHEMATIC 431919

UNLESS OTHERWISE SPECIFIED

PROPRIETARY NOTICE
THIS DOCUMENT AND THE TECHNICAL DATA HEREON DISCLOSED ARE PROPRIETARY TO RACAL-DANA INSTRUMENTS INC AND SHALL NOT WITHOUT EXPRESS WRITTEN PERMISSION OF RACAL-DANA INSTRUMENTS INC. BE USED RELEASED OR DISCLOSED IN WHOLE OR IN PART OR USED TO SOLICIT QUOTATIONS FROM A COMPETITIVE SOURCE OR USED FOR MANUFACTURE BY ANYONE OTHER THAN RACAL-DANA INSTRUMENTS INC. THE INFORMATION HEREON HAS BEEN DEVELOPED AT PRIVATE EXPENSE AND MAY ONLY BE USED FOR PURPOSES OF ENGINEERING EVALUATION AND FOR INCORPORATION INTO TECHNICAL SPECIFICATIONS AND OTHER DOCUMENTS WHICH SPECIFY PROCUREMENT OF PRODUCTS FROM RACAL-DANA INSTRUMENTS INC.

RACAL-DANA Instruments Inc.
4 GOODYEAR IRVINE CALIFORNIA 92714

DOCUMENT TITLE
PCB ASSY, 1260-20 OPT
POWER SWITCH

SIZE	CODE IDENT NO	DOCUMENT NO	REV
D	21793	401919	B
SCALE 1/1		SHEET 1 OF 4	

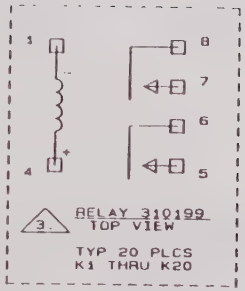

IC POWER AND GROUND CONNECTIONS

REF. DES.	IC TYPE	+5V PIN NO.	GND PIN NO
U17, 21, 25	2803		9
U16, 20, 24	74HCT273	20	10
U14	74HC185	16	8
U13	74LS138	16	8
U11, 12, 15, 19, 23	74HCT164	14	7
U10, 18, 22, 26	74HCT166	16	8
U9	LM339	3	12
U7, 8	26LS32	16	8
U6	26LS31	16	8
U4, 5	74HCT253	16	8
U3	231154 (22V10H)	28	14
U2	231153 (16R4)	20	10
U1	231152 (16L8Q)	20	10

HIGHEST REF. DES.
Z8
W1
U26
S3
P2
L5
K20
J201
C116

NOTES UNLESS OTHERWISE SPECIFIED

1. CAPACITOR VALUES ARE IN MICROFARADS. 50V. +/- 20% UNLESS OTHERWISE SPECIFIED
2. RESISTOR NETWORKS ARE IN OHMS.
3. RELAYS K1 THRU K20 ARE RACAL DANA P/N 310199 ALL RELAYS SHOWN IN DE-ENERGIZED POSITION.
4. C5 AND C6 ARE NOT INSTALLED.

PROPRIETARY NOTICE
THIS DOCUMENT AND THE TECHNICAL DATA HEREON DISCLOSED ARE PROPRIETARY TO RACAL DANA INSTRUMENTS INC AND SHALL NOT WITHOUT EXPRESS WRITTEN PERMISSION OF RACAL DANA INSTRUMENTS INC BE USED RELEASED OR DISCLOSED IN WHOLE OR IN PART OR USED TO SOLICIT QUOTATIONS FROM A COMPETITIVE SOURCE OR USED FOR MANUFACTURE BY ANYONE OTHER THAN RACAL DANA INSTRUMENTS INC. THE INFORMATION HEREON HAS BEEN DEVELOPED AT PRIVATE EXPENSE AND MAY ONLY BE USED FOR PURPOSES OF ENGINEERING EVALUATION AND FOR INCORPORATION INTO TECHNICAL SPECIFICATIONS AND OTHER DOCUMENTS WHICH SPECIFY PROCUREMENT OF PRODUCTS FROM RACAL DANA INSTRUMENTS INC

RACAL-DANA Instruments Inc.
4 GOODYEAR, IRVINE, CALIFORNIA 92714

DOCUMENT TITLE
SCHEM., 1260-20 OPTION POWER SWITCH

SIZE	CODE IDENT NO	DOCUMENT NO	REV
B	21793	431919	A

SCALE —— SHEET 1 OF 10

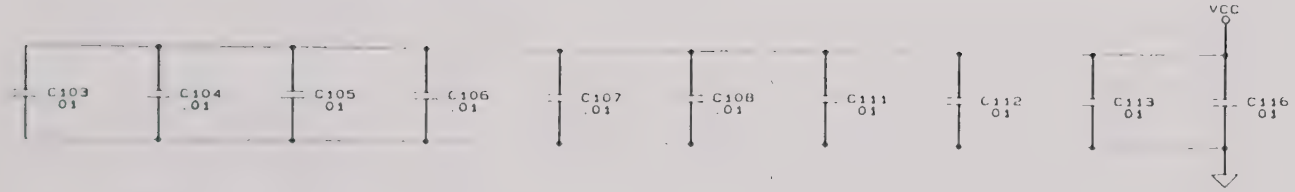

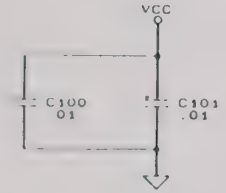

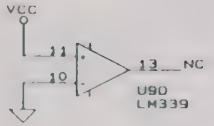

SIZE	CODE IDENT NO	DOCUMENT NO	REV
B	21793	431919	A
SCALE		SHEET 2 OF 10	

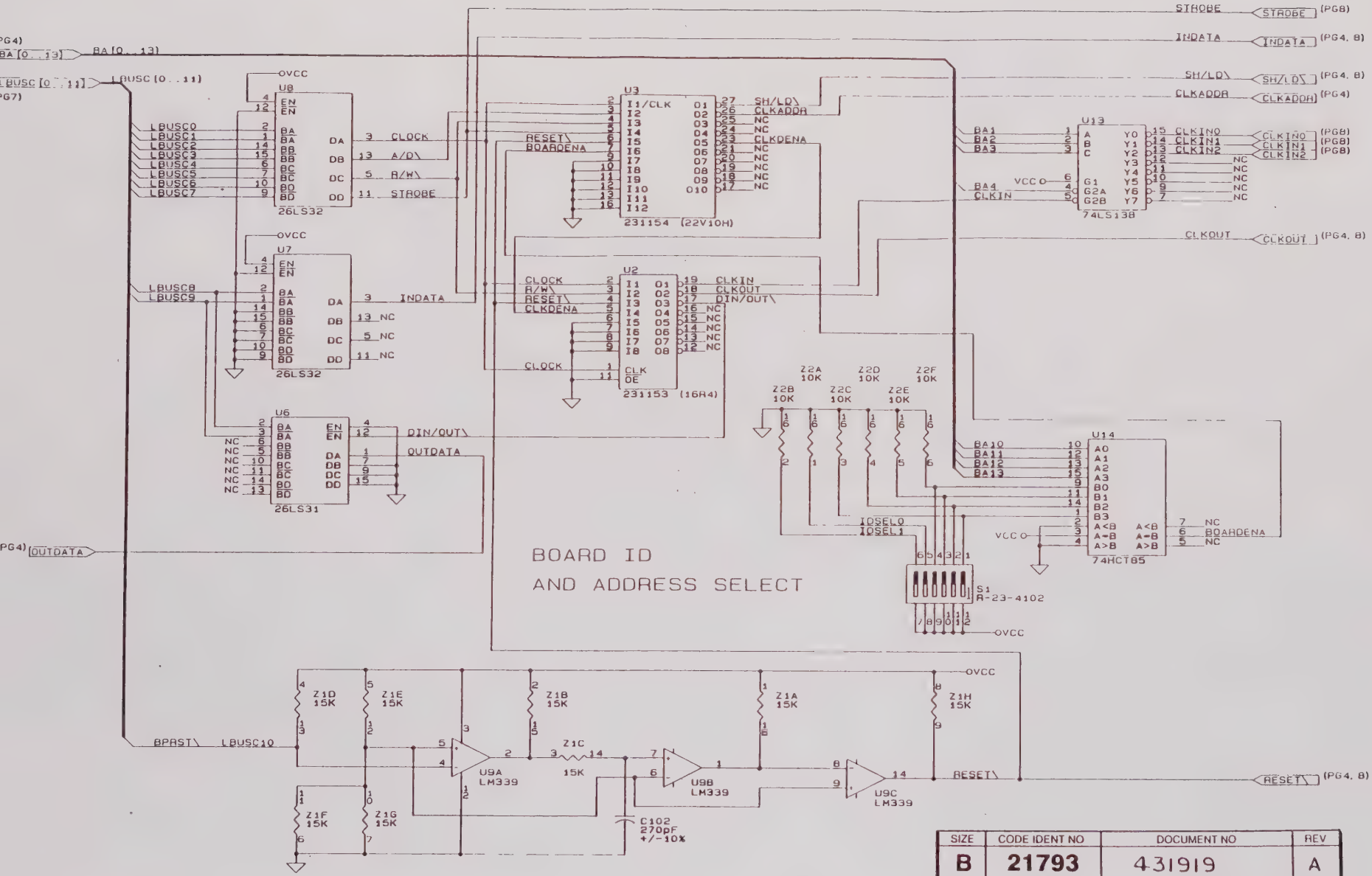

SIZE	CODE IDENT NO	DOCUMENT NO	REV
B	21793	431919	A
SCALE		SHEET 3 OF 10	

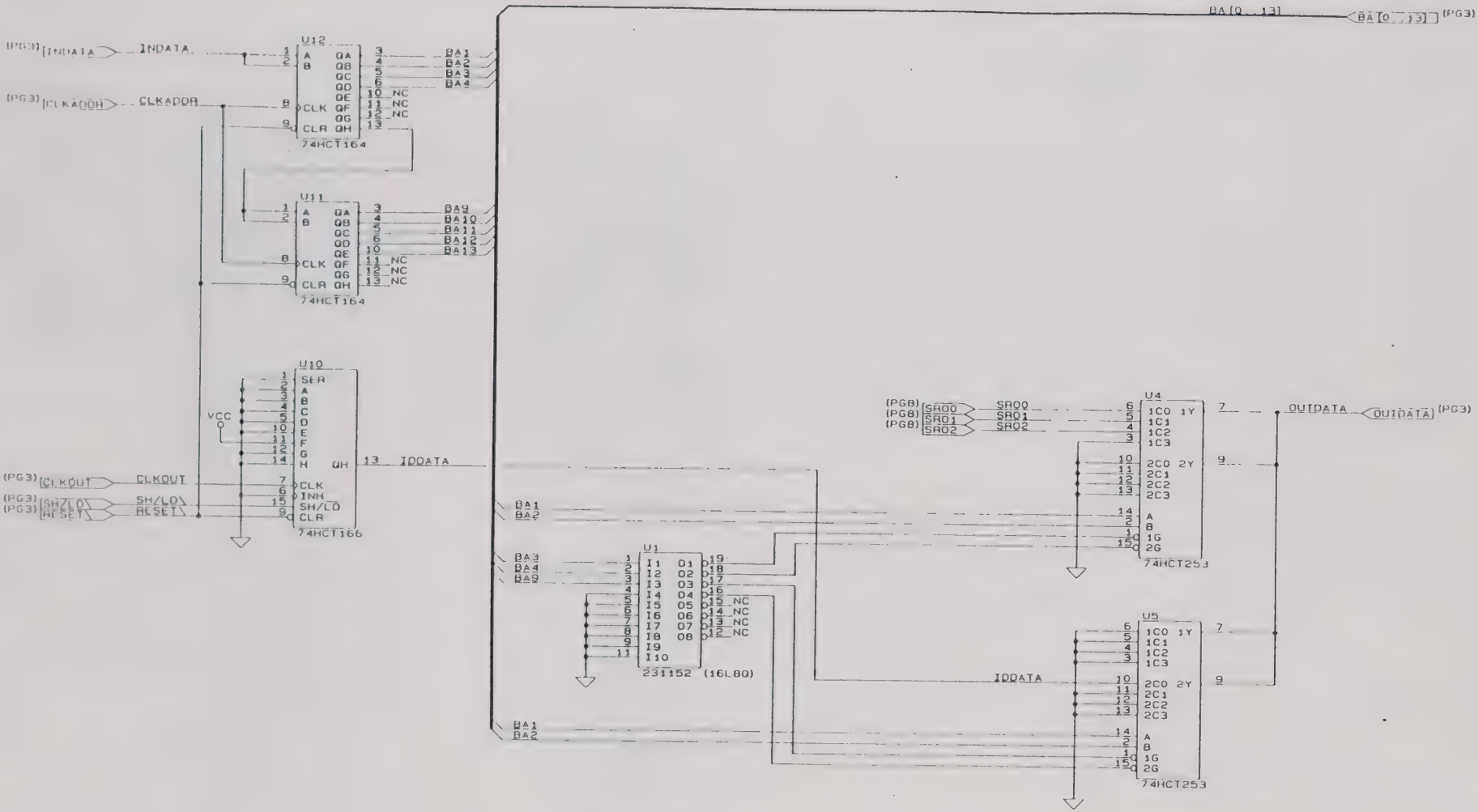

SIZE	CODE IDENT NO	DOCUMENT NO	REV
B	21793	431919	A
SCALE		SHEET 4 OF 10	

SIZE	CODE IDENT NO	DOCUMENT NO	REV
B	21793	431919	A
SCALE		SHEET 5 OF 10	

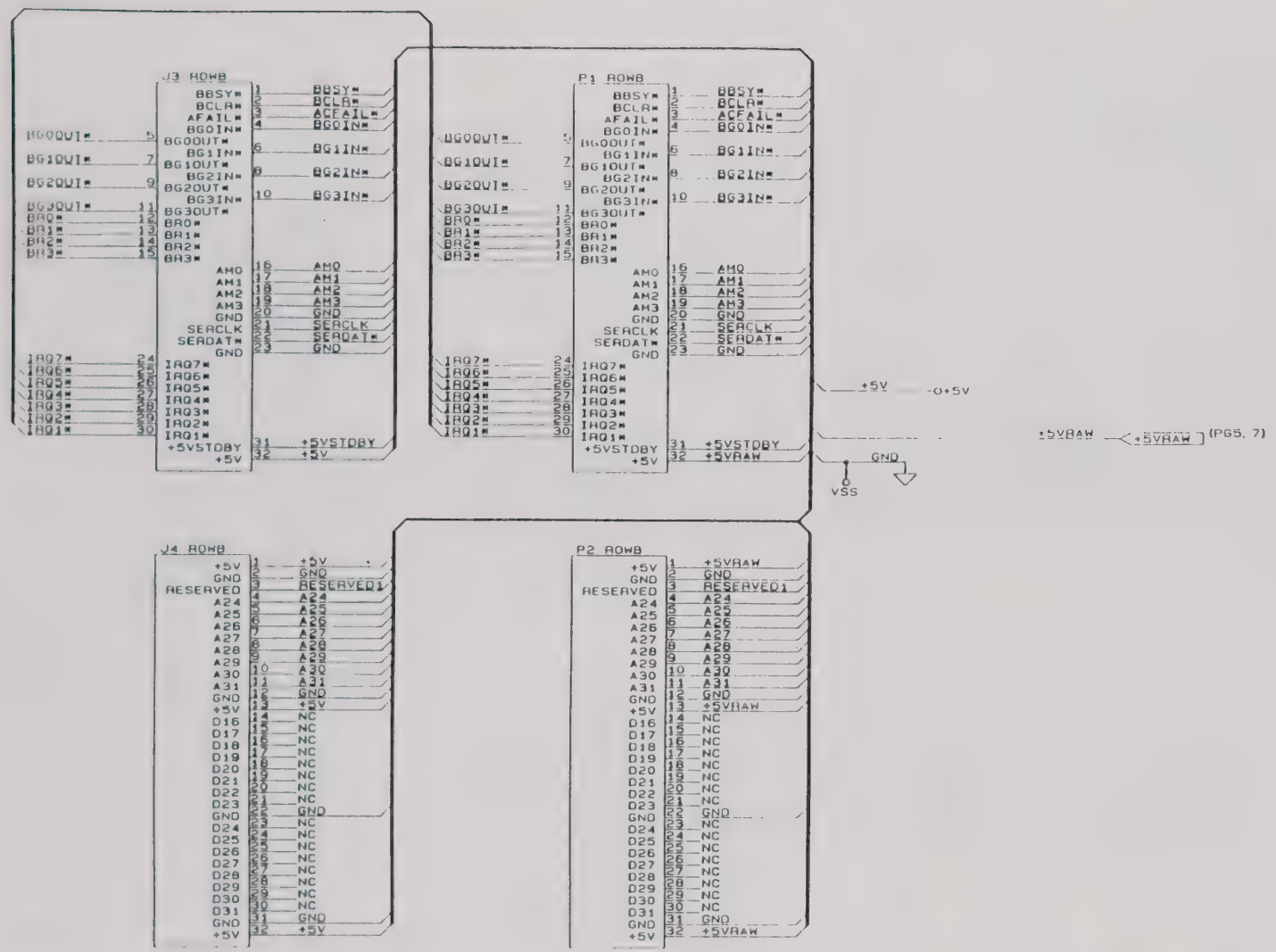

SIZE	CODE IDENT NO	DOCUMENT NO	REV
B	21793	431919	A
SCALE		SHEET 6 OF 10	

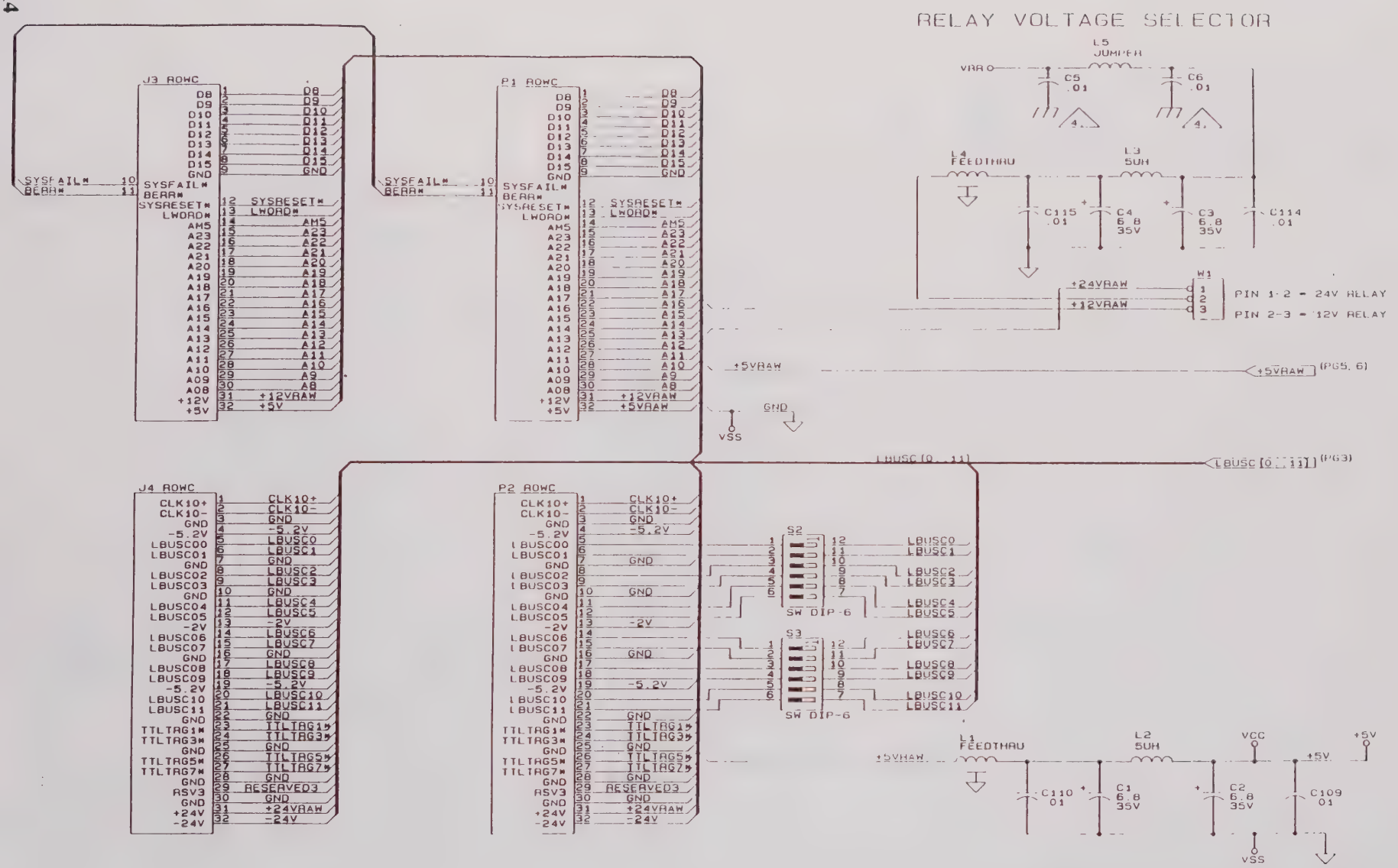

SIZE	CODE IDENT NO	DOCUMENT NO	REV
B	21793	431919	A
SCALE		SHEET 7 OF 10	

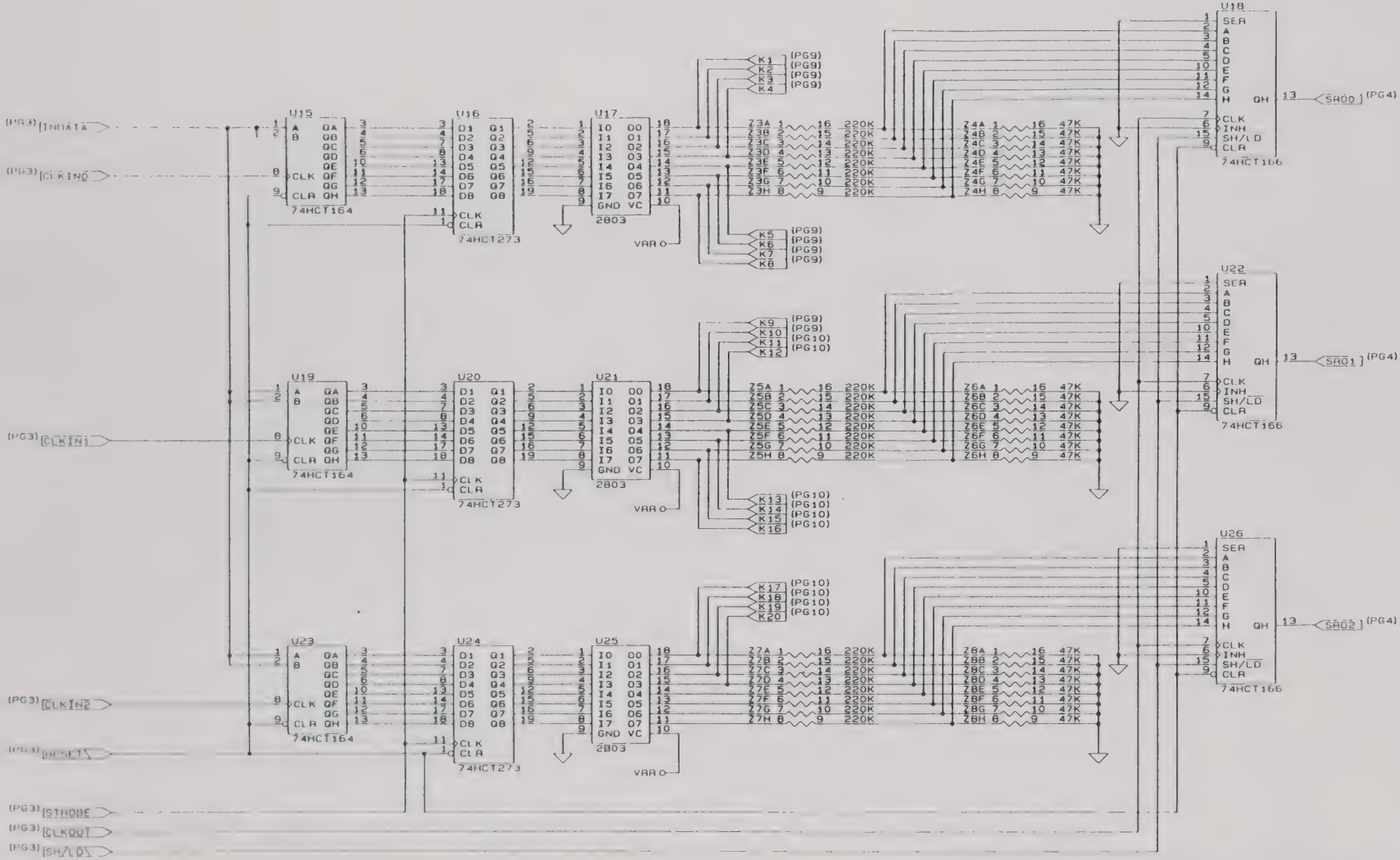

SIZE	CODE IDENT NO	DOCUMENT NO	REV
B	21793	431919	A
SCALE		SHEET 8 OF 10	

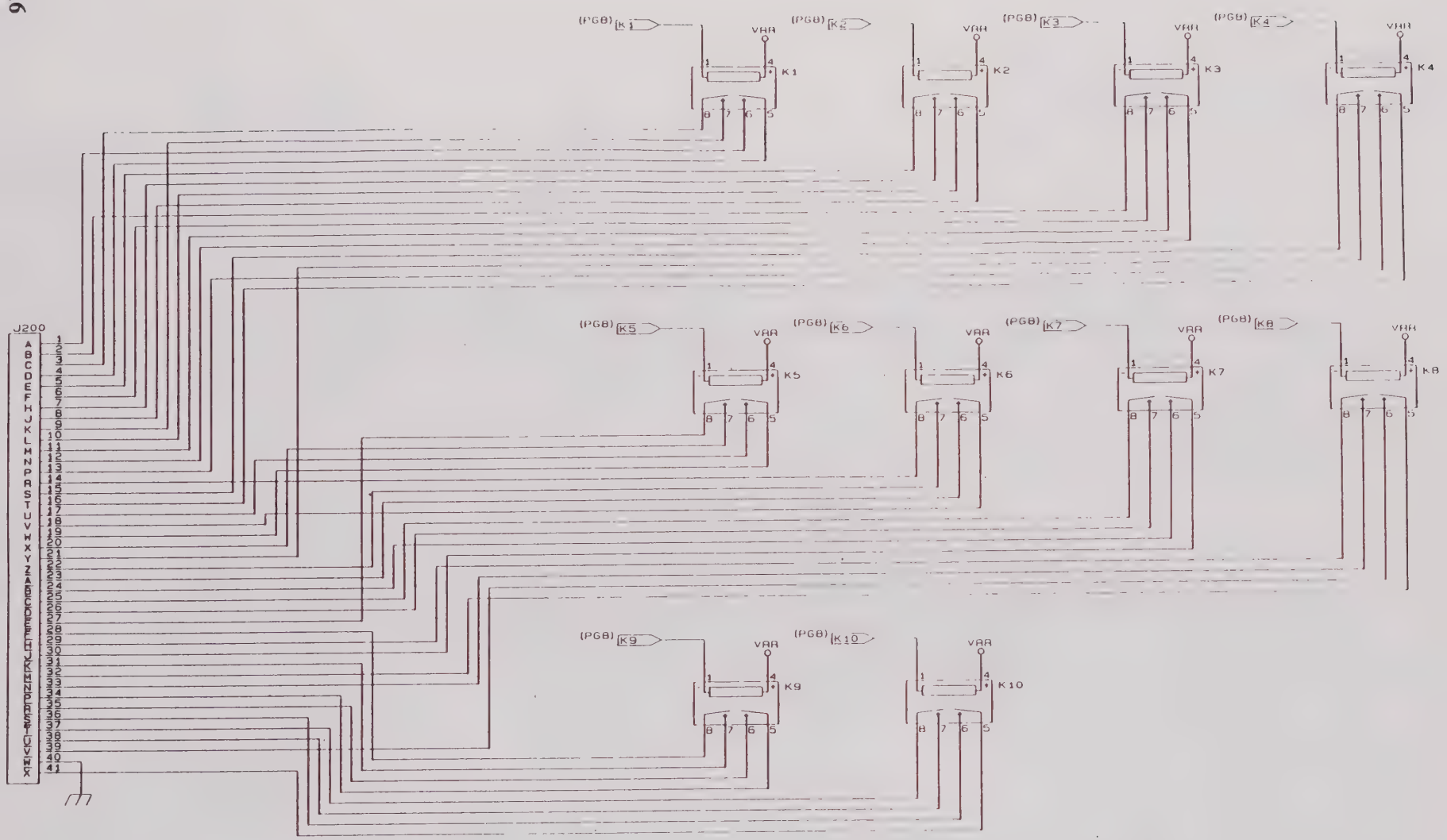

SIZE	CODE IDENT NO	DOCUMENT NO	REV
B	21793	4-31919	A
SCALE		SHEET 9 OF 10	

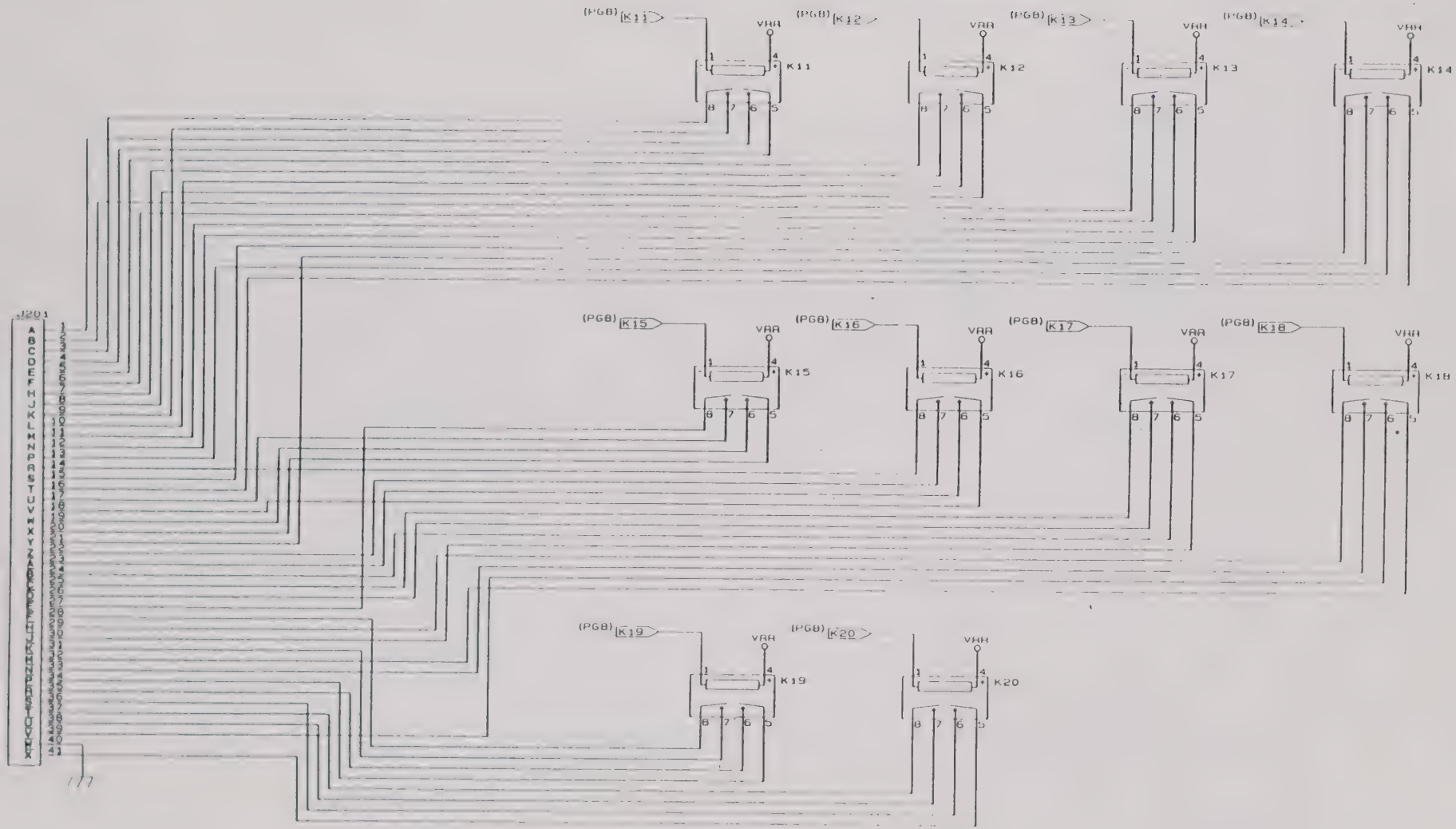

SIZE	CODE IDENT NO	DOCUMENT NO	REV
B	21793	431919	A
SCALE		SHEET 10 OF 10	

404773 FINAL ASSY., 1260-20

REF DESIG	RACAL-DANA P/N	DESCRIPTION	FSC	MANUFACTURER'S P/N
{1}1	401919	PCB ASSY., 1260-20	21793	401919
{3}1	455523-001	PANEL, FRONT, 1260-20	21793	455523-001
{4}1	455524	COVER, BOTTOM	21793	455524
{5}1	455525	COVER, TOP	21793	455525
{8}2	611264	HANDLE, EXTRACTOR, BOTTOM	62559	20817-327
{9}2	611265	HANDLE, EXTRACTOR, TOP	62559	20817-328
{11}10	617101	WASHER, FLAT, LIGHT SERIES, #2	-	-
{12}10	615014	SCREW, PPH, 2-56 X .250	-	-
{13}3	615049	SCREW, PPH, 4-40 X .875	-	-
{14}6	615512	SCREW, PFH, 2-56X.188	-	-
{15}10	617126	WASHER, LOCK, #2, LIGHT SERIES	-	-
{16}3	617127	WASHER, LOCK, #4, LIGHT SERIES	-	-
{18}1	611266	MOUNTING HARDWARE, HANDLE	62559	21100-745
{19}1	921148	LABEL SET, VXI-VME	21793	921148
{21}1	921059	LABEL, CAUTION, STATIC	21793	921059
{22}1	920710	LABEL, IDENIFICATION	21793	920710
{23}1	404935	SHIPPING KIT, 1260-20	21793	404935

404935 SHIPPING KIT, 1260-20

REF DESIG	RACAL-DANA P/N	DESCRIPTION	FSC	MANUFACTURER'S P/N
{3}2	455540	KEY, LOCKOUT, TTL, A/C	21793	455540
{4}2	455541	KEY, LOCKOUT, TTL, A/C	21793	455541
{5}2	455542	KEY, LOCKOUT, TTL, A/C	21793	455542
{7}82	601849	TERMINAL, SOLDER	28198	FS116N2
{8}2	601850	CONNECTOR, CAB, RECEPT, 41 PIN	28198	41FOE100J0
{10}3	615014	SCREW, PPH, 2-56 X .250	-	-

401919 PCB ASSY., 1260-20 OPT

REF DESIG	RACAL-DANA P/N	DESCRIPTION	FSC	MANUFACTURER'S P/N
C1	110126	CAP, TANTA, 6.8UF, 35V, 20 PERCENT	05397	T355F685M035AS
C2	110126	CAP, TANTA, 6.8UF, 35V, 20 PERCENT	05397	T355F685M035AS
C3	110126	CAP, TANTA, 6.8UF, 35V, 20 PERCENT	05397	T355F685M035AS
C4	110126	CAP, TANTA, 6.8UF, 35V, 20 PERCENT	05397	T355F685M035AS
C100-C101	R-21-1801	CAP, CHIP, 10 NF	95275	VJ1206Y103MF
C102	130177	CAPACITOR, CHIP, SMD, 270PF	95275	VJ1206A271KXAMT
C103-C116	R-21-1801	CAP, CHIP, 10 NF	95275	VJ1206Y103MF
J3	601925	CONNECTOR, PCB, RECEPT, 3 ROW, 96P	52072	618008
J4	601925	CONNECTOR, PCB, RECEPT, 3 ROW, 96P	52072	618008
J200,J201	601851	CONNECTOR, PCB, PLUG, 41 PIN	28198	GAPL41MOTOLB
K1-K20	310199	RELAY, POWER, 2 FORM A	61529	ST2E-DC24V
L1	100164	CAP, FEED-THRU,800PF, 50V	00779	842448-2
L2	310193	CHOKE, SHIELDED, 5UH	91637	IH-5-5-10
L3	310193	CHOKE, SHIELDED, 5UH	91637	IH-5-5-10
L4	100164	CAP, FEED-THRU,800PF, 50V	00779	842448-2
L5	600245	JUMPER, INSULATED	52210	L-2007-1
P1-P2	601675	CONNECTOR, EUROCARD TYPE C, 96-PIN	00779	532505-1
S1	R-23-4102	SWITCH,6-WAY,SINGLE THROW	3V841	206-006ST
S2	601915	SWITCH, DIP 6 POS, SMD	91506	ADF-06ST
S3	601915	SWITCH, DIP 6 POS, SMD	91506	ADF-06ST
TP1-TP2	601197	POST, TEST, .025 SQ	00779	6-87022-6
U1	231152	IC, PROGRAMMED PIA	21793	231152
U2	231153	IC, PROGRAMMED PLA	21793	231153
U3	231154	IC, PROGRAMMED PLA	21793	231154
U4	231147	IC, MULTIPLEXER	04713	74HC253D
U5	231147	IC, MULTIPLEXER	04713	74HC253D
U6	231125	IC, DIGITAL, LINE DRIVER	27014	DS26LS31MN
U7	231096	IC, QUAD DIFF RECEIVER	01295	AM26LS32ACD
U8	231096	IC, QUAD DIFF RECEIVER	01295	AM26LS32ACD
U9	231093	IC, QUAD COMPARATOR	04713	LM339D
U10	231120	IC, 8-BIT, PARALLEL/SERIAL OUT S.R.	18324	74HCT166D
U11	231131	IC, DIGITAL, SHIFT REGISTER	18324	PC74HCT164D
U12	231131	IC, DIGITAL, SHIFT REGISTER	18324	PC74HCT164D
U13	231094	IC, DEMUX DECODER	18324	N74LS138D
U14	231135	IC, DIGITAL, 4-BIT COMPARATOR	18324	PC74HCT85D
U15	231131	IC, DIGITAL, SHIFT REGISTER	18324	PC74HCT164D
U16	231130	IC, DIGITAL, FLIP FLOP	18324	PC74HC273
U17	231098	IC, SOIC TRANSISTOR	56289	ULN-2803LW
U18	231120	IC, 8-BIT, PARALLEL/SERIAL OUT S.R.	18324	74HCT166D
U19	231131	IC, DIGITAL, SHIFT REGISTER	18324	PC74HCT164D
U20	231130	IC, DIGITAL, FLIP FLOP	18324	PC74HC273
U21	231098	IC, SOIC TRANSISTOR	56289	ULN-2803LW
U22	231120	IC, 8-BIT, PARALLEL/SERIAL OUT S.R.	18324	74HCT166D
U23	231131	IC, DIGITAL, SHIFT REGISTER	18324	PC74HCT164D
U24	231130	IC, DIGITAL, FLIP FLOP	18324	PC74HC273
U25	231098	IC, SOIC TRANSISTOR	56289	ULN-2803LW
U26	231120	IC, 8-BIT, PARALLEL/SERIAL OUT S.R.	18324	74HCT166D
W1-W2	500022	WIRE, BARE COPPER/TIN, 22 GA	21793	500022
Z1	080114	RES NETWORK, 16P8R, 15K	73138	628-AL-153J
Z2	080120	RES NETWORK, 10K	11236	767-161R10K
Z3	080119	RES NETWORK, 220K	91637	SOMC-1603-224K
Z4	080117	RES NETWORK, 16P8R, 47K	73138	628-AL-473J
Z5	080119	RES NETWORK, 220K	91637	SOMC-1603-224K
Z6	080117	RES NETWORK, 16P8R, 47K	73138	628-AL-473J

401919 PCB ASSY., 1260-20 OPT

REF DESIG	RACAL-DANA P/N	DESCRIPTION	FSC	MANUFACTURER'S P/N
Z7	080119	RES NETWORK, 220K	91637	SOMC-1603-224K
Z8	080117	RES NETWORK, 16P8R, 47K	73138	628-AL-473
{41}1	401951	PCB ASSY., LBUS JUMPER	21793	401951
{58}3	611227	SPACER, PRESS, #4, PCB	46384	KFSE-116-20
{59}4	615027	SCREW, PPH, 3-48 X .188	-	-
{61}A/R	920962	LOCTITE, 242, MED STR.	05972	272

List of Suppliers

FSC	SUPPLIER
00779	AMP INC. HARRISBURG, PA
01295	TEXAS INSTRUMENTS INC. DALLAS, TX
01526	GENICOM CORP. WAYNESBORO, VA
02735	RCA (SOLID STATE DIV.) SOMERVILLE, NEW JERSEY
03508	GENERAL ELECTRIC CO. (SEMI-CONDUCTOR PRODUCTS) AUBURN, NY
04713	MOTOROLA INC. (SEMICONDUCTOR PRODUCTS DIV) PHOENIX, AZ
05397	UNION CARBIDE CORP (MATERIALS SYSTEMS DIV) CLEVELAND, OHIO
05972	LOCTITE CORP HARTFORD, CONN
06383	PANDUIT CORP TINLEY PARK, CA
06540	AMATOM ELECTRONIC HARDWARE NEW ROCHELLE, NY
06776	ROBINSON NUGENT INC. NEW ALBANY, IN
07263	FAIRCHILD (SEMICONDUCTOR DIV.) MOUNTAIN VIEW, CA
08261	SPECTRA-STRIP CORP GARDEN GROVE, CA
11236	CTS OF BERNE INC. BERNE, INDIANA
16956	DENNISON MFG. CO. FRAMINGTON, MA
18324	SIGNETICS INC. SUNNYVALE, CA
21793	RACAL-DANA INSTRUMENTS INC. IRVINE, CA
22526	DUPONT CONNECTOR CO. NEW CUMBERLAND, PA
27014	NATIONAL SEMI-CONDUCTOR CORP. SANTA CLARA, CA
29005	STORM PRODUCTS CO. LOS ANGELES, CA
34359	THREE (3) M CO. (COMMERCIAL TAPE DIV.) ST. PAUL, MN
52072	CIRCUIT ASSY. CORP. COSTA MESA, CA
52210	GETTING ENGRG & MFG. CO. SPRING MILLS, PA
53387	THREE (3) M CO. ST. PAUL, MN
55322	SAMTEC, INC. NEW ALBANY, IN
56289	SPAGUE ELECTRIC CO. N. ADAMS, MA
61529	AROMAT CORP. CUPERTINO, CA
62559	SCHROFF, INC. WARWICK, RI
65832	AMERICAN RESEARCH ENGRG ELGIN, IL
70903	BELDEN CORP. CHICAGO, IL
73138	BECKMAN INSTRUMENTS FULLERTON, CA
73445	AMPEREX ELECTRONIC CORP. HICKSVILLE, NY
78189	ILLINOIS TOOL WORKS, INC. (SHAKEPROOF, DIV.) ELGIN, IL
81349	MILITARY SPECIFICATION
86928	SEASTROM MFG CO. INC. GLENDALE, CA
91637	DALE ELECTRONICS INC. COLUMBUS, NEBRASKA
92194	ALPHA WIRE ELIZABETH, NEW JERSEY
95275	VITRAMON, INC. BRIDGEPORT, CONNECTICUT
98291	SEALECTRO CORP. MAMARONECK, NY

1260-30 SIGNAL/MULTIPLEXER

1260 VXI
SWITCHING CARD

RACAL-DANA

RACAL-DANA INSTRUMENTS INC.

4 Goodyear Street, P.O. Box C-19541, Irvine, CA 92713
Telephone: 714/859-8999, Fax: 714/859-2505

RACAL INSTRUMENTS, LTD.

480 Bath Road, Slough, Berkshire, SL1 6BE, England
Telephone: 44-628 604455, Fax: 44-628 662017

RACAL SYSTEMS ELECTRONIQUE S.A.

18 Avenue Dutartre, 78150 Le Chesnay, France
Telephone: 33-1-3-955-8888, Fax: 33-1-3-955-6735

RACAL ELEKTRONIK SYSTEMS GmbH

Frankenforster Strasse 21, D-5060 Bergisch-Gladbach 1, Federal Republic of Germany
Telephone: 49-22-04-60081, Fax: 49-22-04-21491

RACAL SYSTEMS ELETTRONICA

Via Roma, 108/PAL, E1, 20060 Cassina de Pecchi, Milan, Italy
Telephone: 39-2-9514717/737/770, Fax: 39-2-9514522

RACAL

PUBLICATION DATE: APRIL 1992

Copyright © 1992 by Racal-Dana Instruments Inc. Printed in the United States of America. All rights reserved.
This book or parts thereof may not be reproduced in any form without written permission of the publishers.

TABLE OF CONTENTS

1260-30 SIGNAL/MULTIPLEXER MODULE

1.0	1260-30 Module Specification	1-1
2.0	Installation Instructions	1-3
2.1	Unpacking and Inspection	1-3
2.2	Reshipment Instructions	1-3
2.3	Option 01 Installation	1-3
2.4	Module Installation	1-3
2.4.1	Configuration Setting	1-4
2.4.2	1260-30 ID Byte	1-9
3.0	1260-30 Module Specific Syntax	1-10
3.1	Syntax	1-10
4.0	Drawings	1-14
5.0	Parts List	1-36
6.0	Wire Lists	1-42
7.0	List of Suppliers	1-49

FIGURES

1-1	1260-30 Relay Matrix	1-1
3-1	1260-30 J200 and J201 Connector Pin Configuration	1-11
3-2	1260-30 Configurations and Command Codes	1-12

1.0 1260-30 Module Specification

The 1260-30 Signal / Multiplexer Module is a 1 x 40 multiplexer. It switches two lines per channel, and has the capability of being configured as two 1 x 20 matrices, four 1 x 10 matrices or eight 1 x 5 matrices.

Figure 1-1, 1260-30 Relay Matrix

Specifications

Maximum Switchable Voltage (Terminal-Terminal or Terminal-Chassis)	220 VDC, 250 VAC RMS
Maximum Switchable Current	2 A DC or RMS
Maximum Switchable Power Per Channel	60 W DC, 62.5 VA AC

DC Performance

Isolation	$>10^9$ ohms

AC Performance

Capacitance	
Open Channel:	<40 pF
Channel-Chassis:	<60 pF
Hi-Lo:	<280 pF

Bandwidth (-3 dB, 50 ohm Termination)	10 MHz (typical)
Insertion Loss (50 ohm Termination)	<0.1 dB at 100 kHz <0.1 dB at 1 MHz <1.3 dB at 10 MHz
Crosstalk (50 ohm Termination)	<-55 dB at 100 kHz <-45 dB at 1 MHz <-30 dB at 10 MHz
Switching Time	≤ 4 ms / channel

General

Cooling (Airflow Backpressure)	4.0 l/s, 0.5 mm H_2O
Power Requirements	
+5V:	0.4A (2.5A with Option 01 installed)
+24V:	10 mA per relay
Weight	1.174 kg (2.59 lbs) 1.315 kg (2.90 lbs)
Minimum Option 01 Firmware Revision	2.1

2.0 Installation Instructions

2.1 Unpacking and Inspection

Before unpacking the switching module, check the exterior of the shipping carton for any signs of damage. All irregularities should be noted on the shipping bill. Remove the instrument from its carton, preserving the factory packaging as much as possible. Inspect the switching module for any defect or damage. Immediately notify the carrier if any damage is apparent. Have a qualified person check the instrument for safety before use.

2.2 Reshipment Instructions

Use the original packing when returning the switching module to Racal-Dana for calibration or servicing. The original shipping carton and the instrument's plastic foam will provide the necessary support for safe reshipment. If the original packing is unavailable, wrap the switching module in plastic sheeting and use plastic spray foam to surround and protect the instrument. Reship in either the original or a new shipping carton.

2.3 Option 01 Installation

Installation of the Option 01 to the 1260-30 is described in the Installation section of the 1260 Series VXI Switching Cards Manual.

2.4 Module Installation

Installation of the 1260-30 Switching Module into a VXI mainframe, including the setting of DIP switches, is described in the Installation section of the 1260 Series VXI Switching Cards Manual. Configuration of the PCBA and setting DIP switches SW1-5 and SW1-6 are described in the following sections.

2.4.1 Configuration Settings

2.4.1.1 The 1260-30 is configurable as one 1 x 40, two 1 x 20, four 1 x 10, or eight 1 x 5 multiplexers. The configuration is set by the installation of 24 gauge jumpers to the board as follows:

Model	Configuration	Jumpers
1260-30A	One 1 x 40	All
1260-30B	Two 1 x 20	J1, J2, J3, J5, J6 and J7
1260-30C	Four 1 x 10	J1, J3, J5 and J7
1260-30D	Eight 1 x 5	None

Note this illustrates the principle of the 1260-30 configuration setting. The connections to be made on the PCB are given on the following page.

2.4.1.2 1260-30A

The following connections are required to configure the 1260-30 as a 1260-30A. To configure the 1260-30A from any other 1260-30 configuration, remove all connections not on this list, and install 22 gauge solid jumpers as listed below unless otherwise specified.

COM 01 to E01	COM 22 to E22	COM 51 to E51
COM 02 to E02	COM 31 to E31	COM 52 to E52
COM 11 to E11	COM 32 to E32	COM 61 to E61
COM 12 to E12	COM 41 to E41	COM 62 to E62
COM 21 to E21	COM 42 to E42	COM 71 to E71

COM 72 to E72

W11 to W12

E01-1 to E12-1

E01-2 to E12-2

E23-2 to E34-1

E45-1 to E56-1

E45-2 to E56-2

*E67-1 to E00-1 Teflon stranded, 24 gauge, white
E67-2 to E00-2 Teflon stranded, 24 gauge, black

* Twisted Pair

2.4.1.3 1260-30B

The following connections are required to configure the 1260-30 as a 1260-30B. To configure the 1260-30B from any other 1260-30 configuration, remove all connections not on this list and install 22 gauge solid jumpers as listed below unless otherwise specified.

COM 01 to E01	COM 22 to E22	COM 51 to E51
COM 02 to E02	COM 31 to E31	COM 52 to E52
COM 11 to E11	COM 32 to E32	COM 61 to E61
COM 12 to E12	COM 41 to E41	COM 62 to E62
COM 21 to E21	COM 42 to E42	COM 71 to E72

COM 72 to E72

W1-1 to W1-2

E01-1 to E12-1

E01-2 to E12-2

E45-1 to E56-1

E45-2 to E56-2

*E67-1 to E10-1 Teflon stranded, 24 gauge, white
E67-2 to E10-2 Teflon stranded, 24 gauge, black

*E23-1 to E00-1 Teflon stranded, 24 gauge, white
E23-2 to E00-2 Teflon stranded, 24 gauge, black

* Twisted Pair

2.4.1.4 1260-30C

The following connections are required to configure the 1260-30 as a 1260-30C. To configure the 1260-30C from any other 1260-30 configuration, remove all connections not on this list and install 22 gauge solid jumpers as listed below unless otherwise specified.

COM 01 to E01	COM 31 to E31	COM 61 to E61
COM 02 to E02	COM 32 to E32	COM 62 to E62
COM 11 to E11	COM 41 to E41	COM 71 to E71
COM 12 to E12	COM 42 to E42	COM 72 to E72
COM 21 to E21	COM 51 to E51	W11 to W12
COM 22 to E22	COM 52 to E52	

*E01-1 to E00-1	Teflon stranded, 24 gauge, white
E01-2 to E00-2	Teflon stranded, 24 gauge, black
*E23-1 to E10-1	Teflon stranded, 24 gauge, white
E23-2 to E10-2	Teflon stranded, 24 gauge, black
*E45-1 to E20-1	Teflon stranded, 24 gauge, white
E45-2 to E20-2	Teflon stranded, 24 gauge, black
*E67-1 to E30-1	Teflon stranded, 24 gauge, white
E67-2 to E30-2	Teflon stranded, 24 gauge, black

* Twisted Pair

2.4.1.5 1260-30D

The following connections are required to configure the 1260-30 as a 1260-30D. To configure the 1260-30B from any other 1260-30 configuration, remove all connections not on this list and install 22 gauge solid jumpers as listed below unless otherwise specified.

*COM 01 to E00-1	Teflon stranded, 24 gauge, white
COM 02 to E00-2	Teflon stranded, 24 gauge, black
*COM 11 to E10-1	Teflon stranded, 24 gauge, white
COM 12 to E10-2	Teflon stranded, 24 gauge, black
*COM 21 to E20-1	Teflon stranded, 24 gauge, white
COM 22 to E20-2	Teflon stranded, 24 gauge, black
*COM 31 to E30-1	Teflon stranded, 24 gauge, white
COM 32 to E30-2	Teflon stranded, 24 gauge, black
*COM 41 to E40-1	Teflon stranded, 24 gauge, white
COM 42 to E40-2	Teflon stranded, 24 gauge, black
*COM 51 to E50-1	Teflon stranded, 24 gauge, white
COM 52 to E50-2	Teflon stranded, 24 gauge, black
*COM 61 to E60-1	Teflon stranded, 24 gauge, white
COM 62 to E60-2	Teflon stranded, 24 gauge, black
*COM 71 to E70-1	Teflon stranded, 24 gauge, white
COM 72 to E70-2	Teflon stranded, 24 gauge, black

W1-1 to W1-2

* Twisted Pair

2.4.2 1260-30 ID Byte

Each configuration of the 1260-30 will respond to different sets of values for <group number> and <channel>. The set of values is controlled by switches 5 and 6 on DIP switch S1 on the PCB. The switch settings that correspond to the four configurations are as follows:

Model	Configuration	S1 Switches 5	6
1260-30A	One 1 x 40	Off	Off
1260-30B	Two 1 x 20	On	Off
1260-30C	Four 1 x 10	Off	On
1260-30D	Eight 1 x 5	On	On

3.0 1260-30 Module Specific Syntax

The Module Specific Syntax for the 1260-30 is required in the use of the OPEN and CLOSE commands. It will also appear in data output by the Master in response to the PDATAOUT and PSETUP commands.

3.1 Syntax

The Module Specific Syntax for the 1260-30 Signal Multiplexer / Scanner module is as follows:

<module address>.<group number><channel>

where <module address> is the address.

<group number> is number of switching groups implemented in the module. The range of values for <group number> is up to 0 - 7.

<channel> is the path in the group to be switched. For 1260-30 configurations containing more than one group, the values for <channel> are repeated for each group.

NOTE

The <module address> used here is not the VXIbus defined logical address of the 1260 Master. It is peculiar to the 1260 Series, and describes the switching module in relation to the Master. This address corresponds to the binary value of the switch setting of SW1 on the switching module PCB.

3.1.1

The valid values of <group number> and <channel> for the different 1260-30 configurations are as follows:

Configuration	<channel>	<group number>s
One 1 x 40	00 - 39	0
Two 1 x 20	00 - 19	0, 1
Four 1 x 10	00 - 09	0, 1, 2 and 3
Eight 1 x 5	00 - 04	0, 1, 2, 3, 4, 5, 6 and 7

Refer to Figure 3-1 for connector pin configurations, and to Figure 3-2 for the command codes required to open and close the various <channels> for the four configurations.

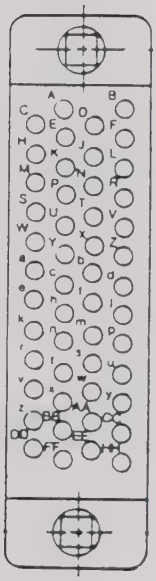

Figure 3-1, 1260-30 J200 and J201 Connector Pin Configuration

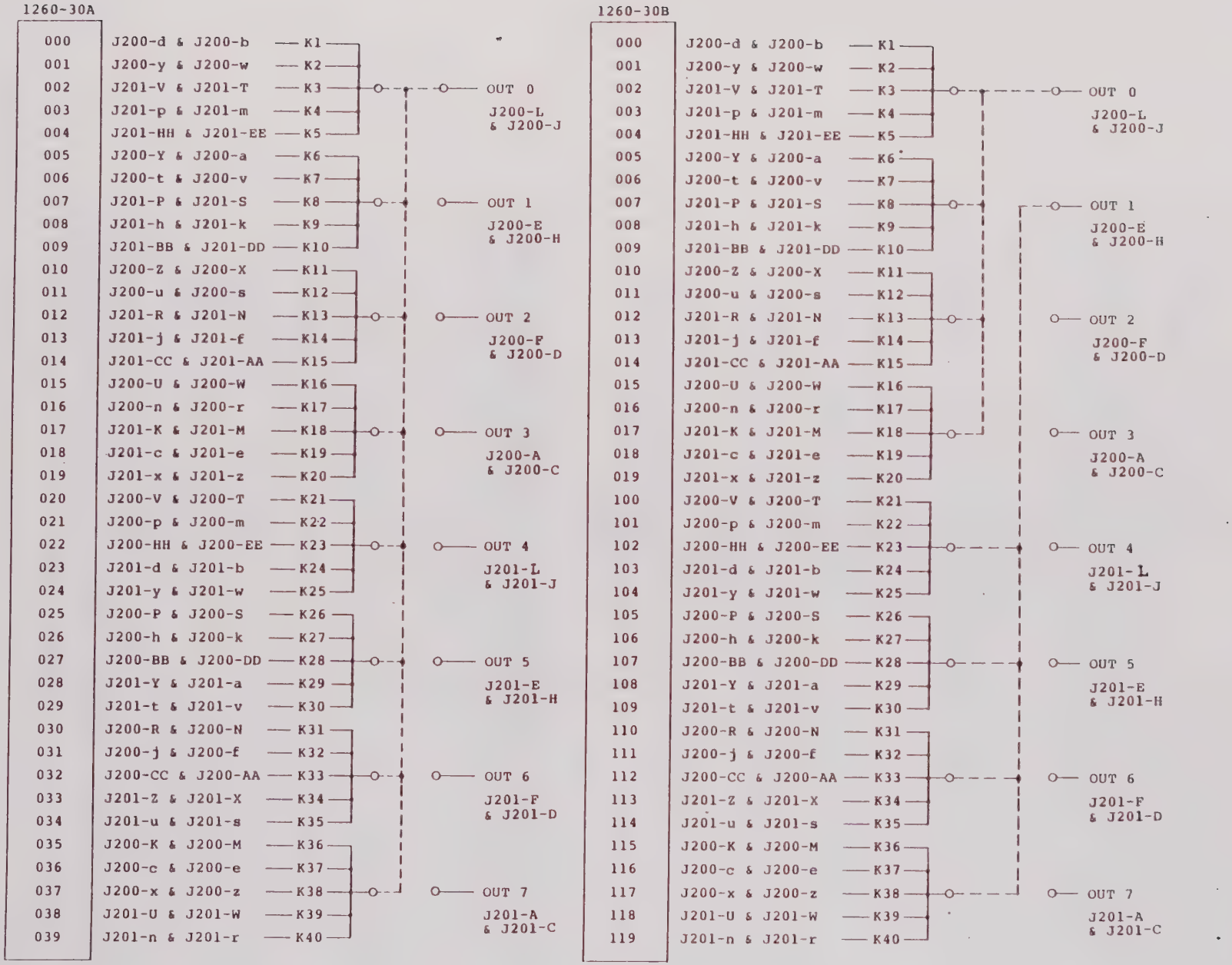

J200-B, J200-FF, J201-B, J201-FF are chassis ground.

Figure 3-2, 1260-30 Configurations And Command Codes

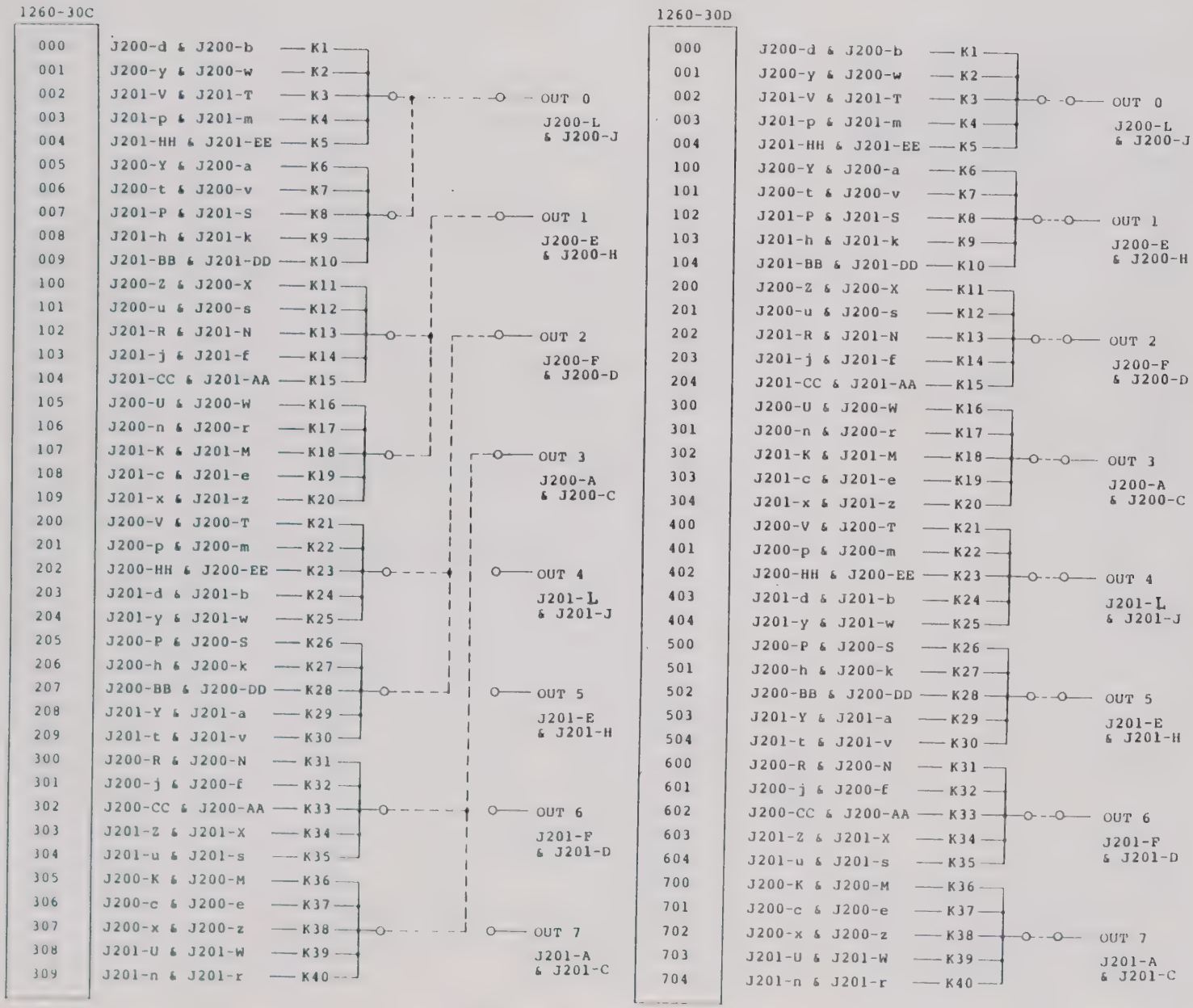

J200-B, J200-FF, J201-B, J201-FF are chassis ground.

Figure 3-2, 1260-30 Configurations and Command Codes (continued)

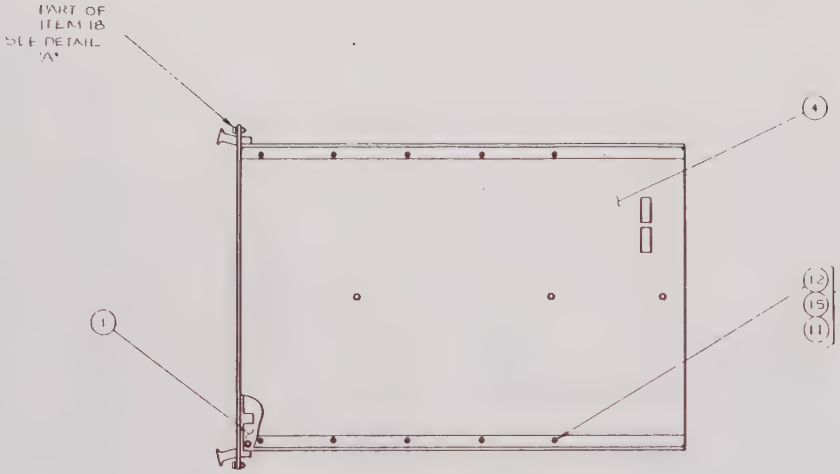

BOTTOM VIEW

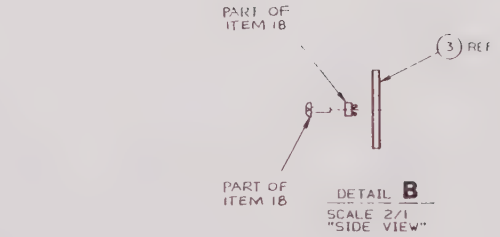

DETAIL **B**
SCALE 2/1
"SIDE VIEW"

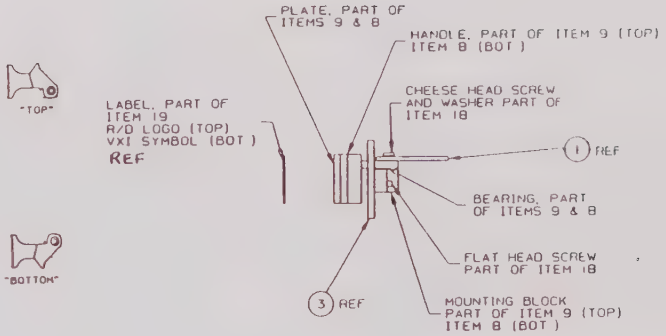

DETAIL **A**
SCALE 2/1
SIDE VIEW

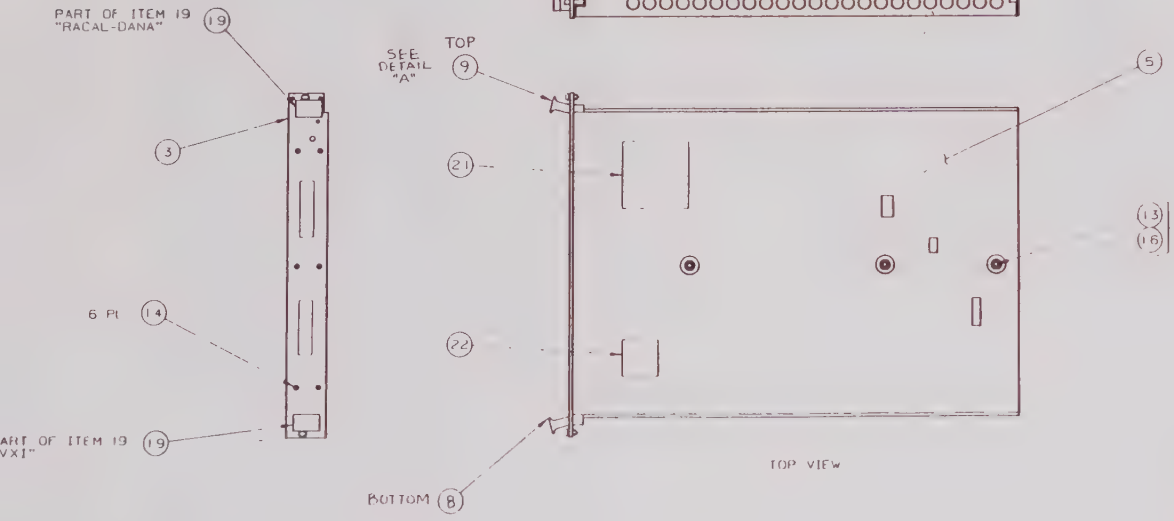

TOP VIEW

PROPRIETARY NOTICE
THIS DOCUMENT AND THE TECHNICAL DATA HEREON DISCLOSED ARE PROPRIETARY TO RACAL DANA INSTRUMENTS INC AND SHALL NOT WITHOUT EXPRESS WRITTEN PERMISSION OF RACAL DANA INSTRUMENTS INC BE USED RELEASED OR DISCLOSED IN WHOLE OR IN PART OR USED TO SOLICIT QUOTATIONS FROM A COMPETITIVE SOURCE OR USED FOR MANUFACTURE BY ANYONE OTHER THAN RACAL DANA INSTRUMENTS INC THE INFORMATION HEREON HAS BEEN DEVELOPED AT PRIVATE EXPENSE AND MAY ONLY BE USED FOR PURPOSES OF ENGINEERING EVALUATION AND FOR INCORPORATION INTO TECHNICAL SPECIFICATIONS AND OTHER DOCUMENTS WHICH SPECIFY PROCUREMENT OF PRODUCTS FROM RACAL DANA INSTRUMENTS INC

RACAL-DANA Instruments Inc.			
4 GOODYEAR, IRVINE, CALIFORNIA 92714			
DOCUMENT TITLE: FINAL ASSY, 1260-30A			
SIZE	CODE IDENT NO	DOCUMENT NO	REV
D	21793	404767-001	B
SCALE/2		SHEET 1 OF 5	

1 SET SWITCH CONFIGURATION FOR SW1:6-OFF, SW1:5-OFF

NOTES:

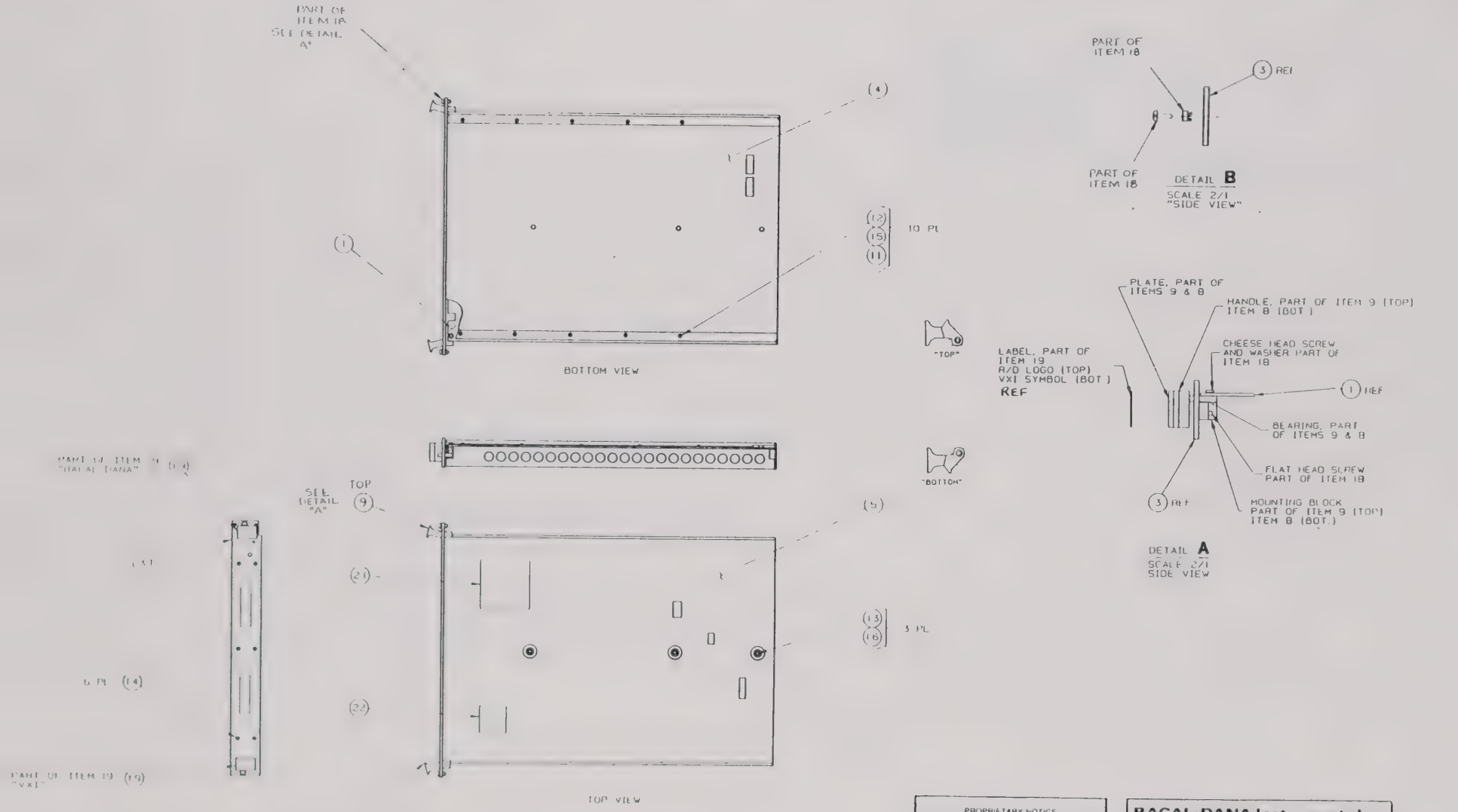

SET SWITCH CONFIGURATION FOR SW1 6 OFF, SW1:5 OFF

NOTES

PROPRIETARY NOTICE
THIS DOCUMENT AND THE TECHNICAL DATA HEREON DISCLOSED ARE PROPRIETARY TO RACAL DANA INSTRUMENTS INC AND SHALL NOT WITHOUT EXPRESS WRITTEN PERMISSION OF RACAL DANA INSTRUMENTS INC BE USED RELEASED OR DISCLOSED IN WHOLE OR IN PART OR USED TO SOLICIT QUOTATIONS FROM A COMPETITIVE SOURCE OR USED FOR MANUFACTURE BY ANYONE OTHER THAN RACAL DANA INSTRUMENTS INC THE INFORMATION HEREON HAS BEEN DEVELOPED AT PRIVATE EXPENSE AND MAY ONLY BE USED FOR PURPOSES OF ENGINEERING EVALUATION AND FOR INCORPORATION INTO TECHNICAL SPECIFICATIONS AND OTHER DOCUMENTS WHICH SPECIFY PROCUREMENT OF PRODUCTS FROM RACAL DANA INSTRUMENTS INC

RACAL-DANA Instruments Inc.
4 GOODYEAR, IRVINE, CALIFORNIA 92714

DOCUMENT TITLE
FINAL ASSY, 1260-30B

SIZE	CODE IDENT NO	DOCUMENT NO	REV
D	21793	404767-002	B
SCALE/2		SHEET 1 OF 5	

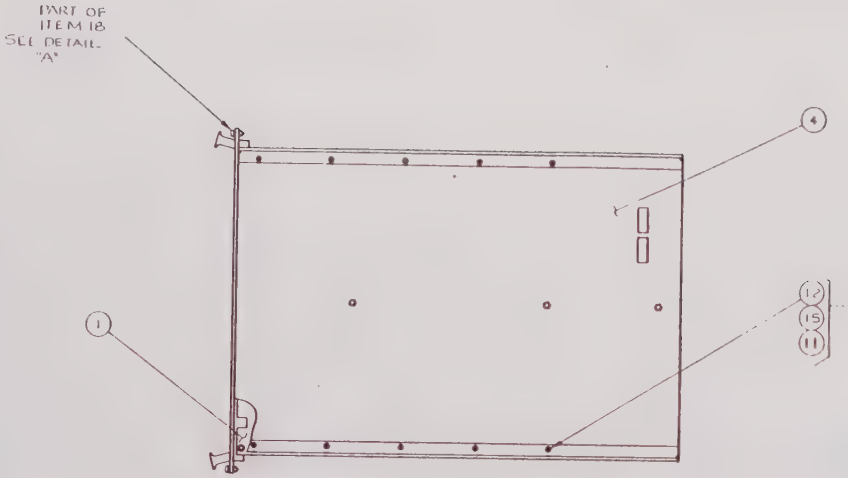

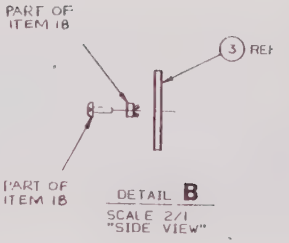

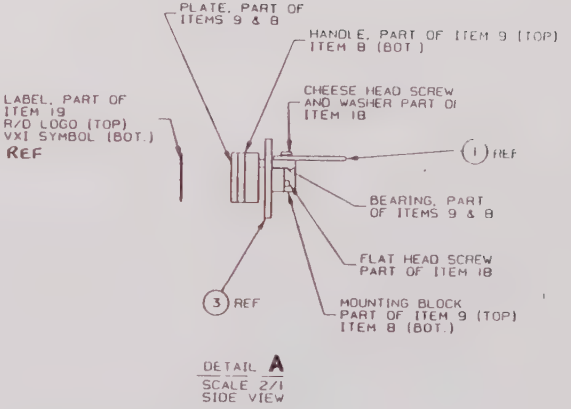

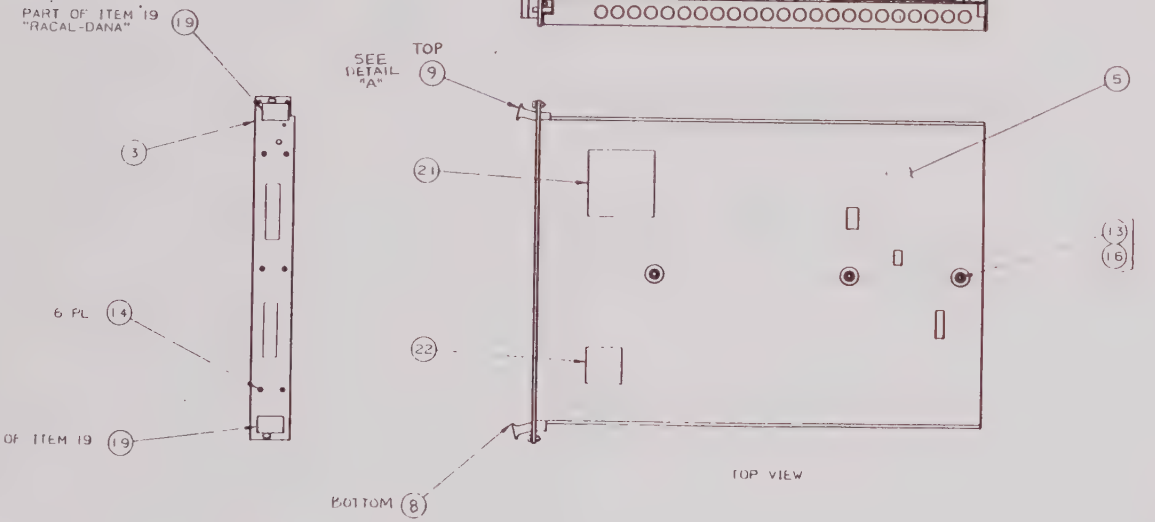

1 SET SWITCH CONFIGURATION FOR SW1:6-OFF, SW1:5-OFF
NOTE 5

PROPRIETARY NOTICE
THIS DOCUMENT AND THE TECHNICAL DATA HEREON DISCLOSED ARE PROPRIETARY TO RACAL DANA INSTRUMENTS INC AND SHALL NOT WITHOUT EXPRESS WRITTEN PERMISSION OF RACAL DANA INSTRUMENTS INC BE USED RELEASED OR DISCLOSED IN WHOLE OR IN PART OR USED TO SOLICIT QUOTATIONS FROM A COMPETITIVE SOURCE OR USED FOR MANUFACTURE BY ANYONE OTHER THAN RACAL DANA INSTRUMENTS INC THE INFORMATION HEREON HAS BEEN DEVELOPED AT PRIVATE EXPENSE AND MAY ONLY BE USED FOR PURPOSES OF ENGINEERING EVALUATION AND FOR INCORPORATION INTO TECHNICAL SPECIFICATIONS AND OTHER DOCUMENTS WHICH SPECIFY PROCUREMENT OF PRODUCTS FROM RACAL DANA INSTRUMENTS INC

RACAL-DANA Instruments Inc.
4 GOODYEAR, IRVINE, CALIFORNIA 92714

DOCUMENT TITLE
FINAL ASSY, 1260-30C

SIZE	CODE IDENT NO	DOCUMENT NO	REV
D	21793	404767-003	B
SCALE/2		SHEET 1 OF 5	

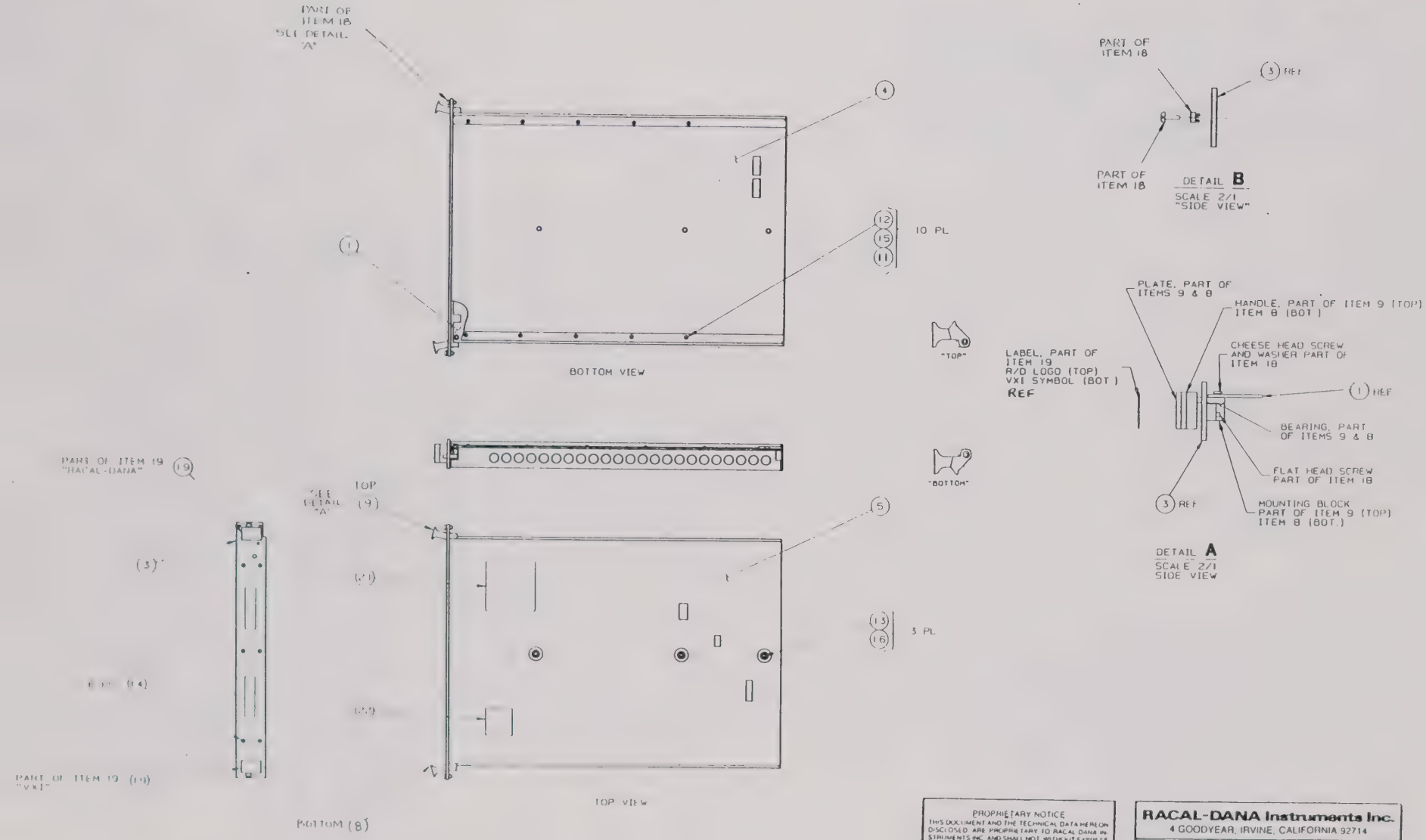

SWITCH CONFIGURATION FOR SW1 6-OFF, SW1:5 OFF

PROPRIETARY NOTICE
THIS DOCUMENT AND THE TECHNICAL DATA HEREON DISCLOSED ARE PROPRIETARY TO RACAL DANA INSTRUMENTS INC. AND SHALL NOT WITHOUT EXPRESS WRITTEN PERMISSION OF RACAL DANA INSTRUMENTS INC BE USED RELEASED OR DISCLOSED IN WHOLE OR IN PART OR USED TO SOLICIT QUOTATIONS FROM A COMPETITIVE SOURCE OR USED FOR MANUFACTURE BY ANYONE OTHER THAN RACAL DANA INSTRUMENTS INC. THE INFORMATION HEREON HAS BEEN DEVELOPED AT PRIVATE EXPENSE AND MAY ONLY BE USED FOR PURPOSES OF ENGINEERING EVALUATION AND FOR INCORPORATION INTO TECHNICAL SPECIFICATIONS AND OTHER DOCUMENTS WHICH SPECIFY PROCUREMENT OF PRODUCTS FROM RACAL DANA INSTRUMENTS INC.

RACAL-DANA Instruments Inc.
4 GOODYEAR, IRVINE, CALIFORNIA 92714

DOCUMENT TITLE: FINAL ASSY, 1260-30D

SIZE	CODE IDENT NO	DOCUMENT NO	REV
D	21793	404767-004	B

SCALE/2 SHEET 1 OF 5

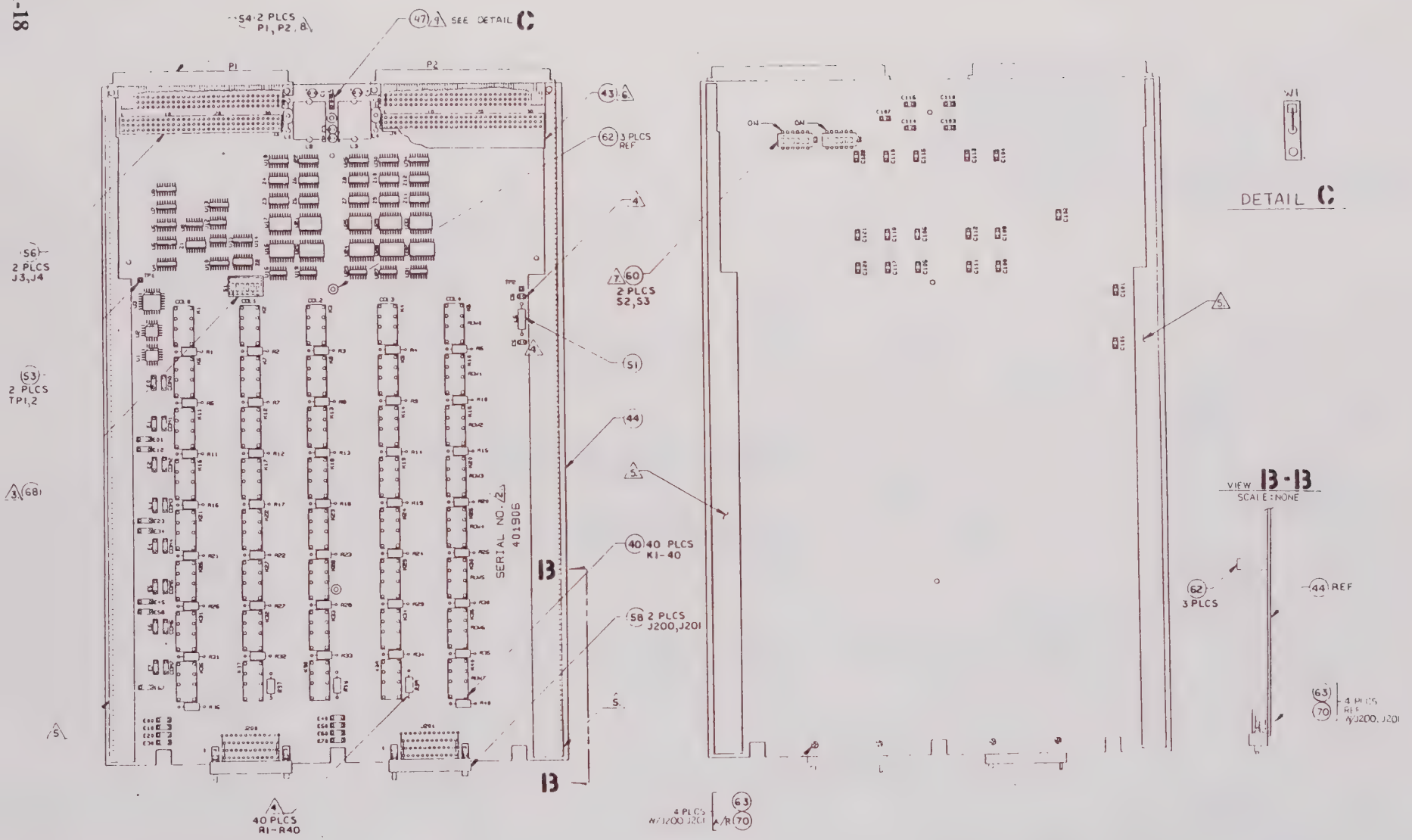

3 INSTALL ITEM 47 BETWEEN W1-1 AND W1-2.

6 P1 AND P2 MUST BE INSTALLED FLUSH AT RIGHT ANGLES TO PC BOARD.

7 SET ALL S2,S3 SWITCHES (ON) OR (CLOSED) OR (1) POSITION. DO NOT HAVE SOLDER.

5 INSTALL (ITEM 43) PCB INTO (ITEM 56) J4.

5 AREAS INDICATED TO BE FLAT AND FREE FROM SOLDER (BOTH SIDES).

4 THE FOLLOWING PARTS ARE NOT INSTALLED C5, C6, R1-R40

3 SET S1 TO LOGICAL ADDRESS 1 PER TABLE 1.

2 INK STAMP SERIAL NUMBER ON COMPONENT SIDE IN INDICATED AREA.

1. REFERENCE SCHEMATIC 431906

PROPRIETARY NOTICE
THIS DOCUMENT AND THE TECHNICAL DATA HEREIN DISCLOSED ARE PROPRIETARY TO RACAL DANA INSTRUMENTS, INC. AND SHALL NOT, WITHOUT EXPRESS WRITTEN PERMISSION OF RACAL DANA INSTRUMENTS, INC. BE USED, RELEASED OR DISCLOSED IN WHOLE OR IN PART OR USED TO SOLICIT QUOTATIONS FROM A COMPETITIVE SOURCE OR USED FOR MANUFACTURE BY ANYONE OTHER THAN RACAL DANA INSTRUMENTS, INC. THE INFORMATION HEREON HAS BEEN DEVELOPED AT PRIVATE EXPENSE AND MAY ONLY BE USED FOR PURPOSES OF OPERATION AND EVALUATION AND FOR INCORPORATION INTO TECHNICAL SPECIFICATIONS AND OTHER DOCUMENTS WHICH SPECIFY PROCUREMENT OF PRODUCTS FROM RACAL DANA INSTRUMENTS INC.

RACAL-DANA Instruments Inc.
4 GOODYEAR, IRVINE, CALIFORNIA 92714

DOCUMENT TITLE			
PCB ASSY, 1260-30			
SIZE	CODE IDENT NO	DOCUMENT NO	REV
D	21793	401906	C
SCALE 1/1		SHEET 1 OF 4	

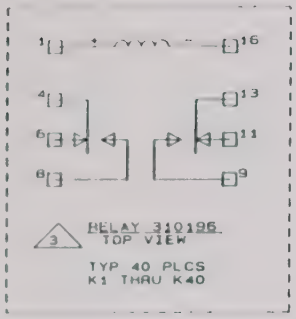

3 RELAY 310196
TOP VIEW

TYP 40 PLCS
K1 THRU K40

HIGHEST REF. DES.
Z12
W1
U34
S3
R40
P2
L5
K40
J201
E70
C122

IC POWER AND GROUND CONNECTIONS

REF. DES.	IC TYPE	+5V PIN NO.	GND PIN NO
U17, 21, 25, 29, 33	2803		9
U16, 20, 24, 28, 32	74HCT273	20	10
U14	74HCT85	16	8
U13	74LS138	16	8
U11, 12, 15, 19, 23, 27, 31	74HCT164	14	7
U10, 18, 22, 26, 30, 34	74HCT166	16	8
U9	LM339	3	12
U7, 8	26LS32	16	8
U6	26LS31	16	8
U4, 5	74HCT253	16	8
U3	231154 (22V10H)	28	14
U2	231153 (16R4)	20	10
U1	231152 (16L8Q)	20	10

NOTES UNLESS OTHERWISE SPECIFIED

4. C5 AND C6, R1 THRU R40 ARE NOT INSTALLED
3. RELAYS K1 THRU K40 ARE RACAL DANA P/N 310196
   ALL RELAYS SHOWN IN DE-ENERGIZED POSITION.
2. RESISTOR NETWORKS ARE IN OHMS.
1. CAPACITOR VALUES ARE IN MICROFARADS, 50V, +/-20% UNLESS OTHERWISE SPECIFIED.

PROPRIETARY NOTICE
THIS DOCUMENT AND THE TECHNICAL DATA HEREON DISCLOSED ARE PROPRIETARY TO RACAL DANA INSTRUMENTS INC. AND SHALL NOT WITHOUT EXPRESS WHITTEN PERMISSION OF RACAL DANA INSTRUMENTS INC. BE USED, RELEASED OR DISCLOSED IN WHOLE OR IN PART, OR USED TO SOLICIT QUOTATIONS FROM A COMPETITIVE SOURCE OR USED FOR MANUFACTURE BY ANYONE OTHER THAN RACAL DANA INSTRUMENTS INC. THE INFORMATION HEREON HAS BEEN DEVELOPED AT PRIVATE EXPENSE AND MAY ONLY BE USED FOR PURPOSES OF ENGINEERING EVALUATION AND FOR INCORPORATION INTO TECHNICAL SPECIFICATIONS AND OTHER DOCUMENTS WHICH SPECIFY PROCUREMENT OF PRODUCTS FROM RACAL DANA INSTRUMENTS INC.

RACAL-DANA Instruments Inc.
4 GOODYEAR, IRVINE, CALIFORNIA 92714

DOCUMENT TITLE

SCHEM.,1260-30

SIZE	CODE IDENT NO	DOCUMENT NO	REV
B	21793	431906	B

SCALE ——— SHEET 1 OF 17

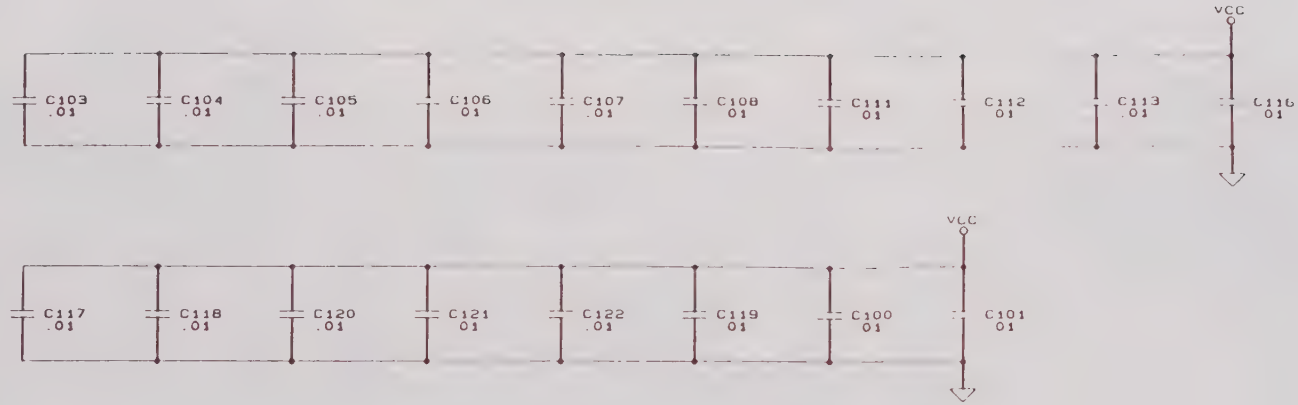

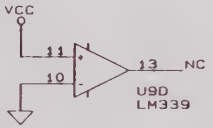

SIZE	CODE IDENT NO	DOCUMENT NO	REV
B	21793	431906	B
SCALE ——		SHEET 2 OF 17	

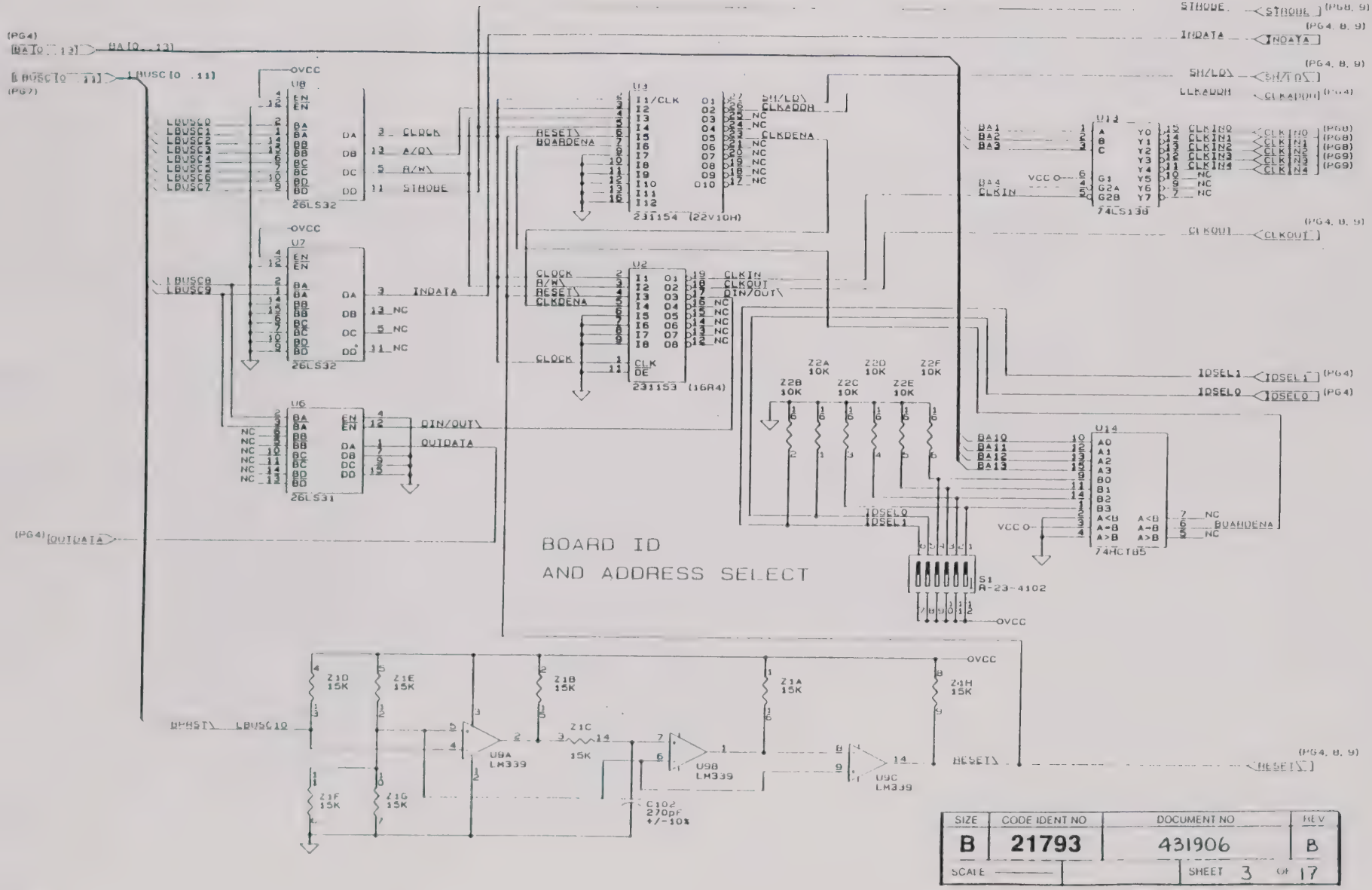
BOARD ID
AND ADDRESS SELECT
SIZE
B
CODE IDENT NO
21793
DOCUMENT NO
431906
REV
B
SCALE
SHEET 3 OF 17

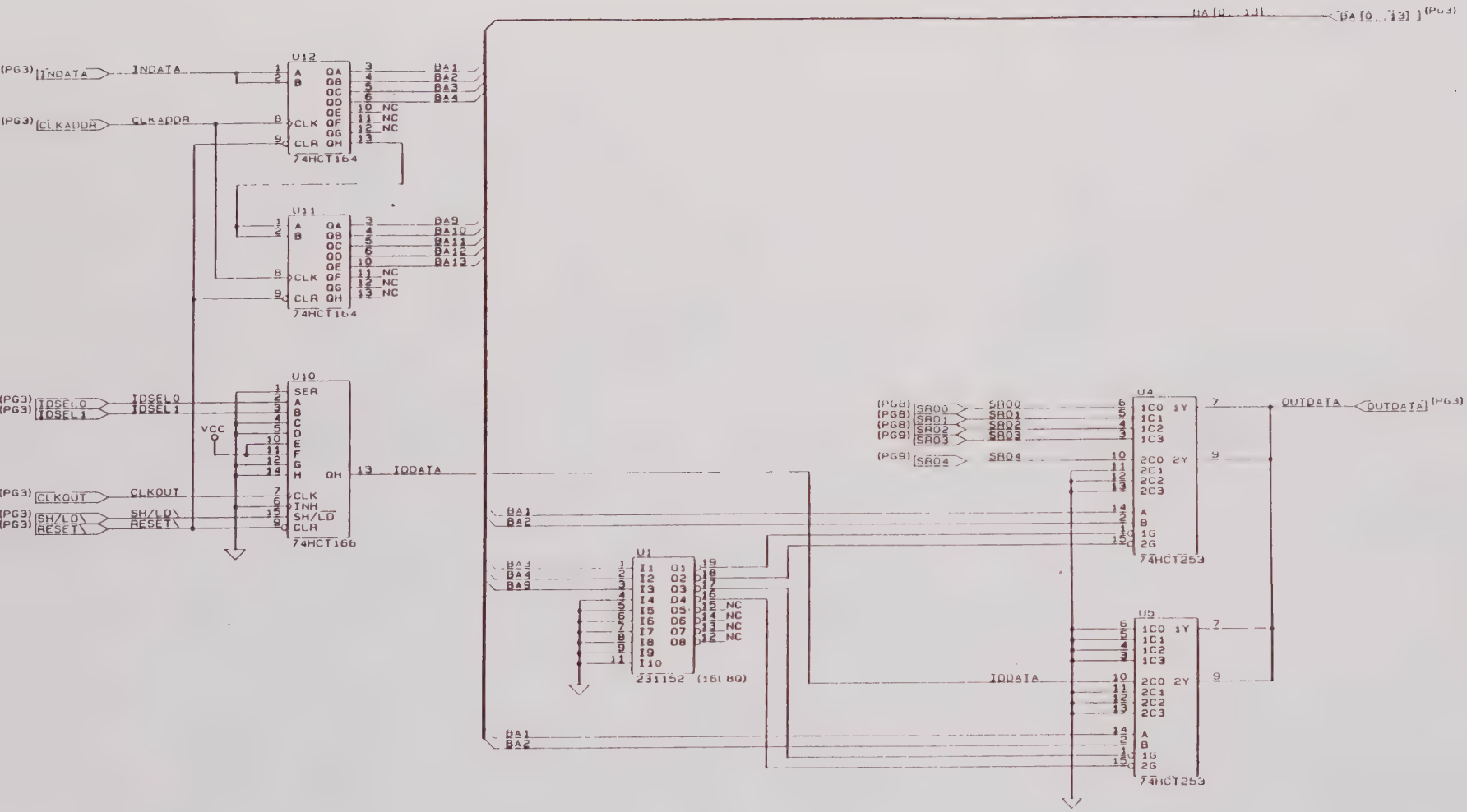

SIZE	CODE IDENT NO	DOCUMENT NO	REV
B	21793	431906	B
SCALE		SHEET 4 OF 17	

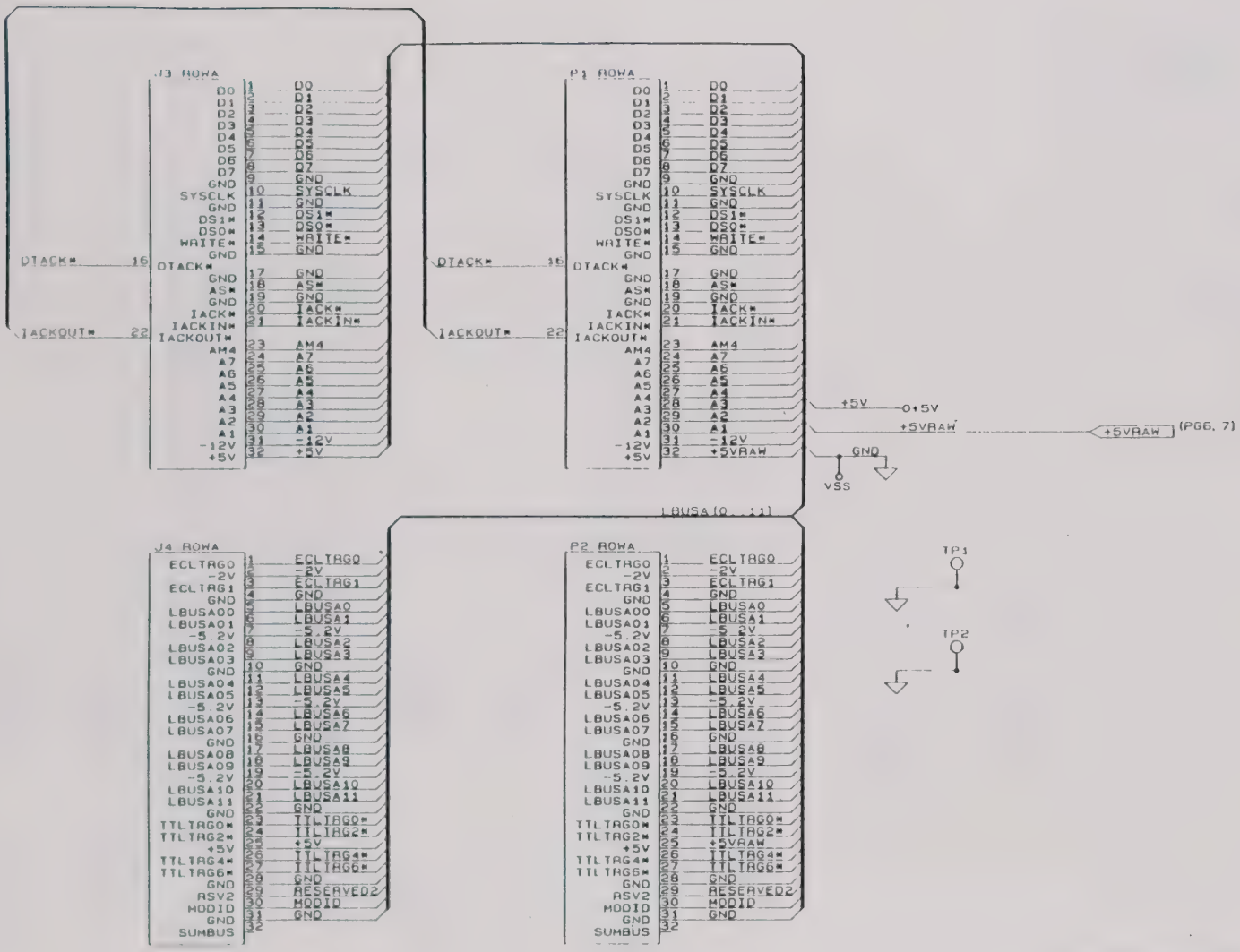

SIZE	CODE IDENT NO	DOCUMENT NO	REV
B	21793	431906	B
SCALE		SHEET 5 OF 17	

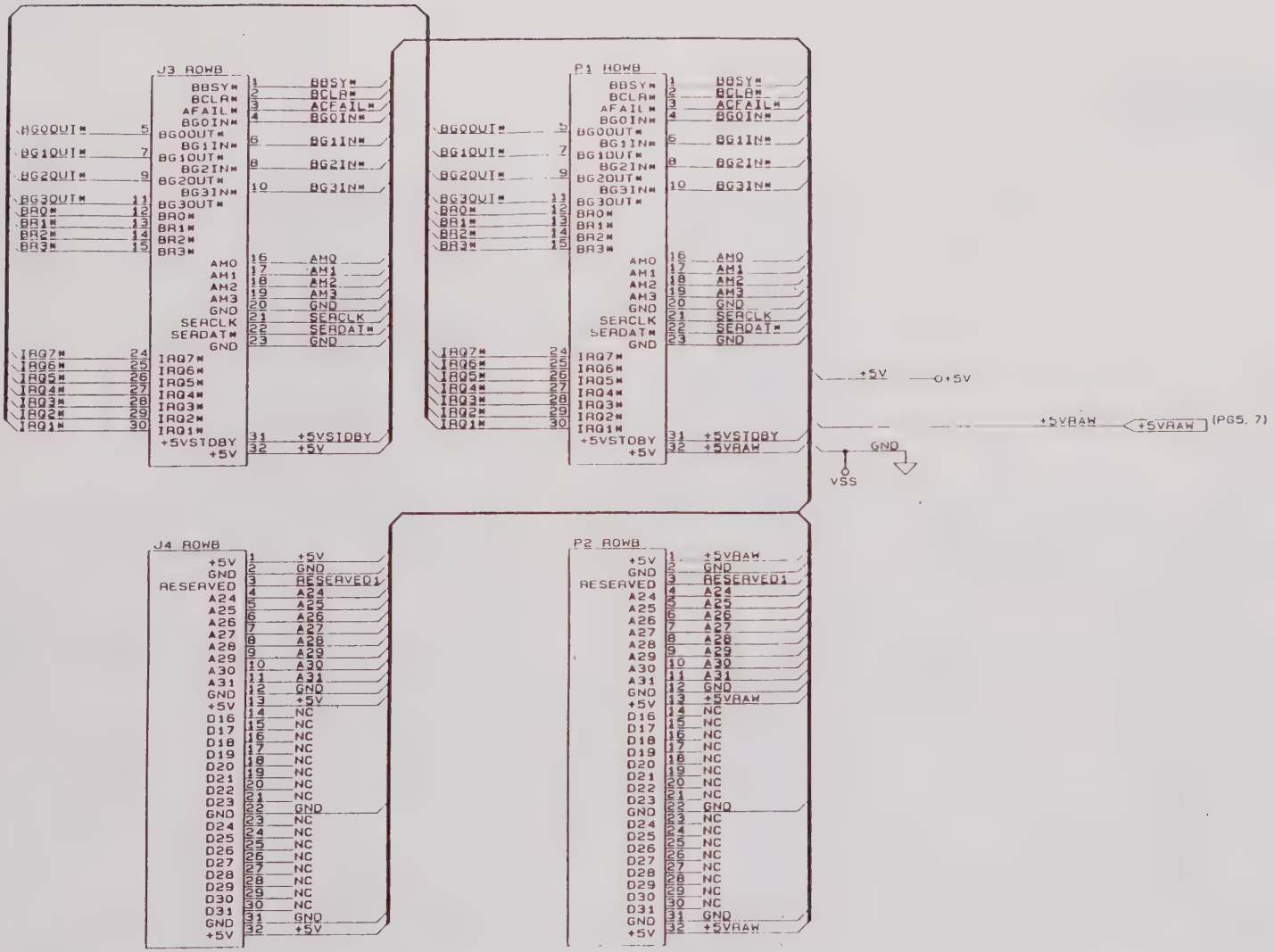

SIZE	CODE IDENT NO	DOCUMENT NO	REV
B	21793	431906	B
SCALE		SHEET 6 OF 17	

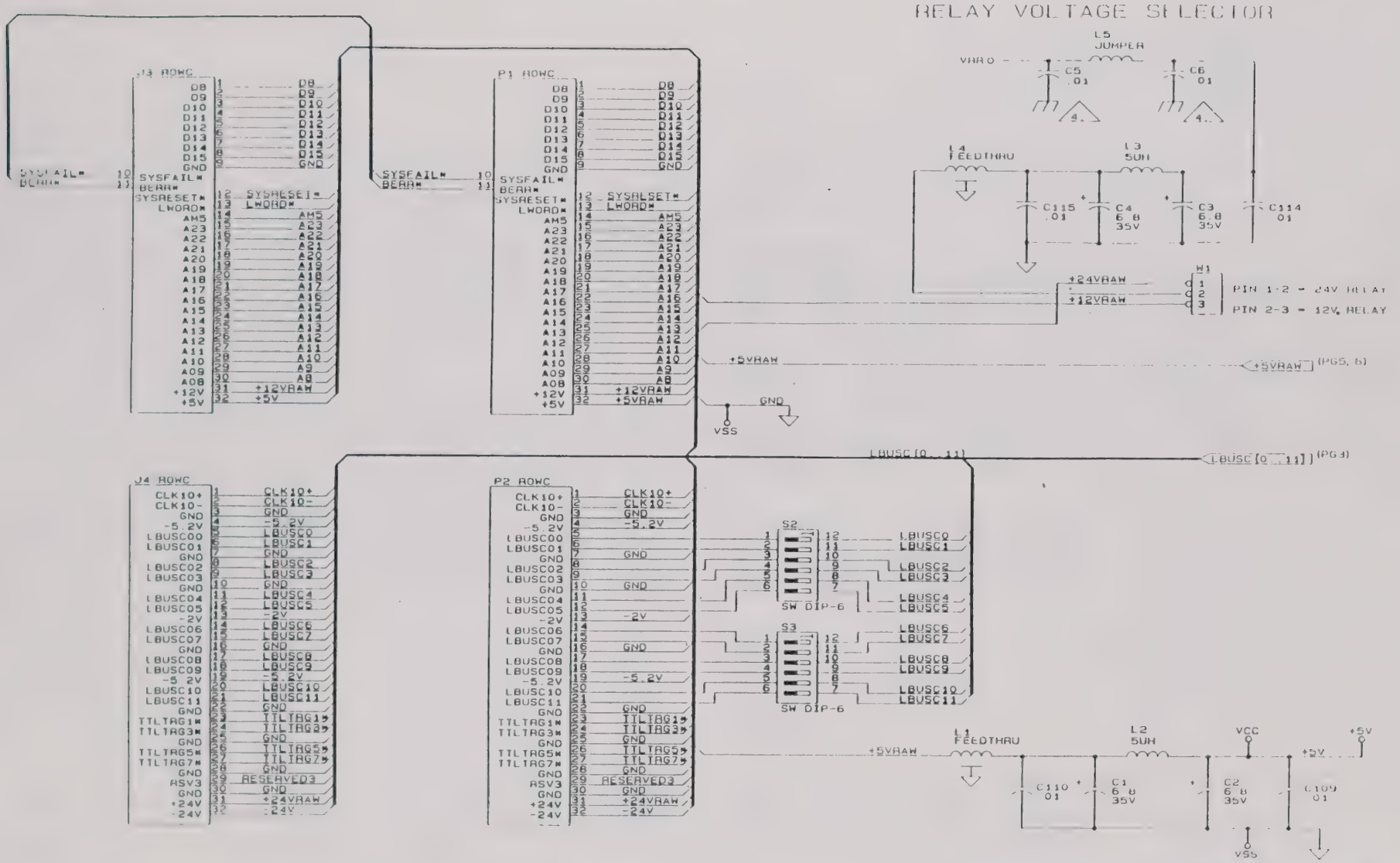

SIZE	CODE IDENT NO	DOCUMENT NO	REV
B	21793	431906	B
SCALE		SHEET 7 OF 17	

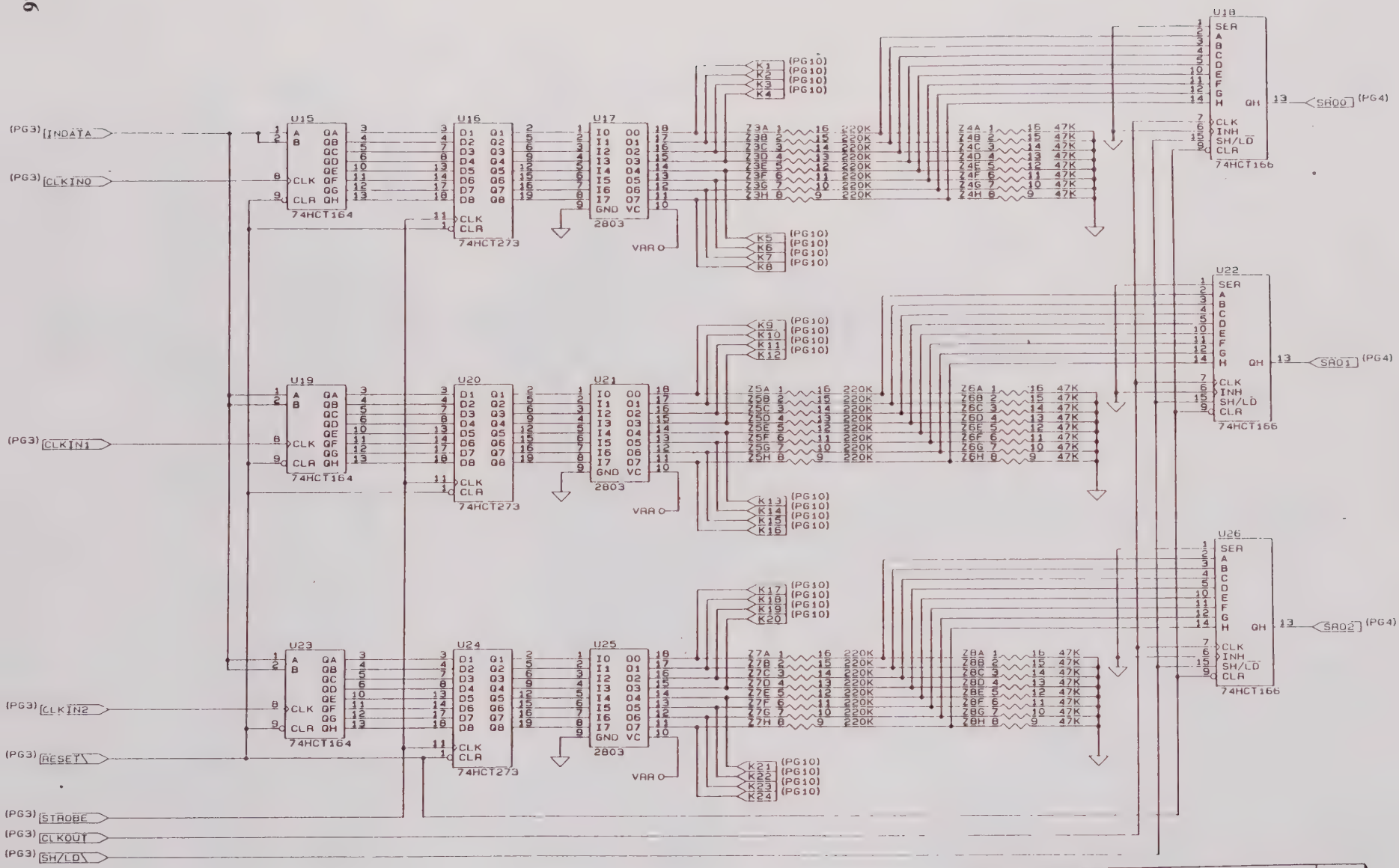

SIZE	CODE IDENT NO	DOCUMENT NO	REV
B	21793	431906	B
SCALE		SHEET 8 OF 17	

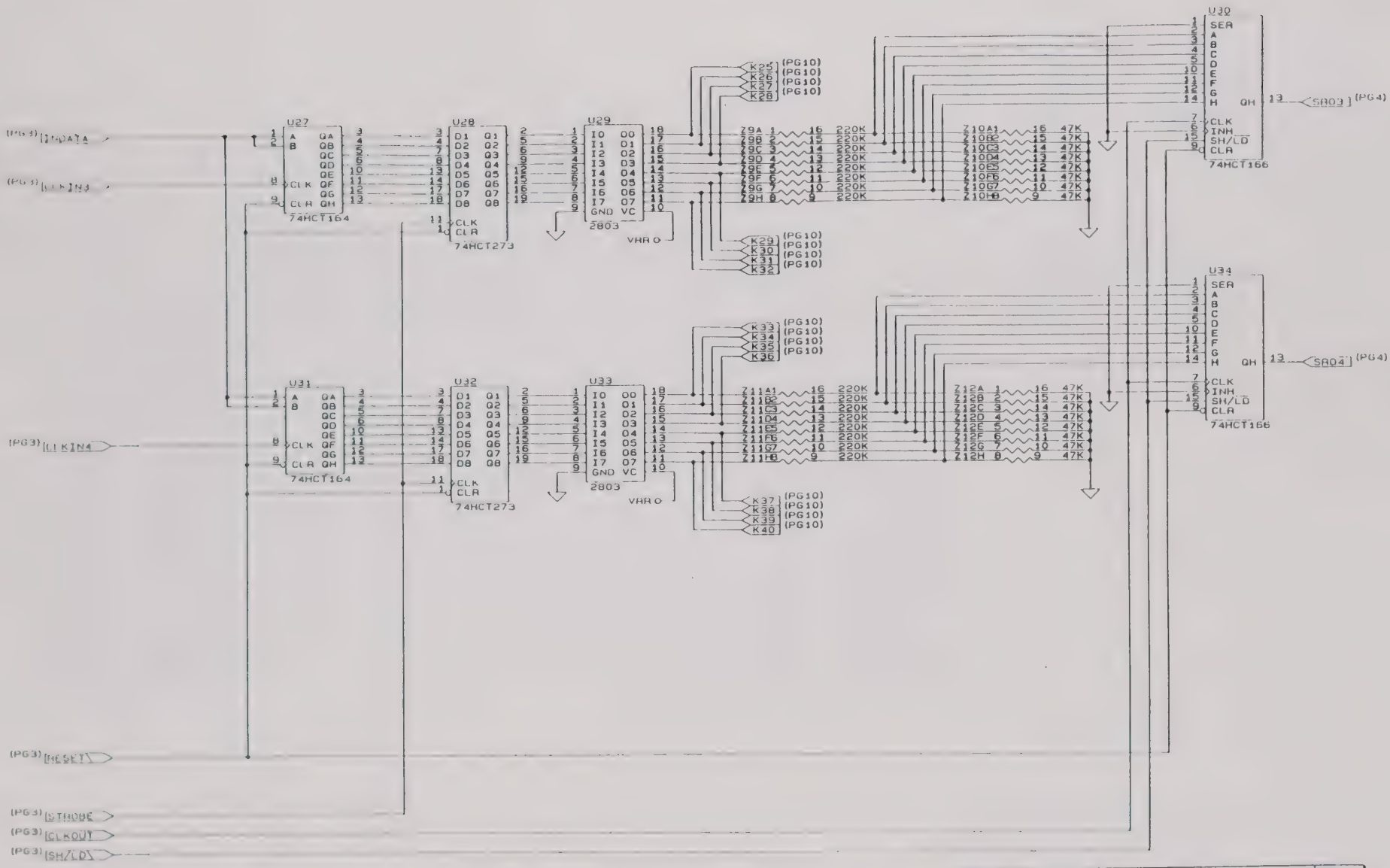

SIZE	CODE IDENT NO	DOCUMENT NO	REV
B	21793	431906	B
SCALE		SHEET 9 OF 17	

SIZE	CODE IDENT NO	DOCUMENT NO	REV
B	21793	431906	B
SCALE		SHEET 10	OF 17

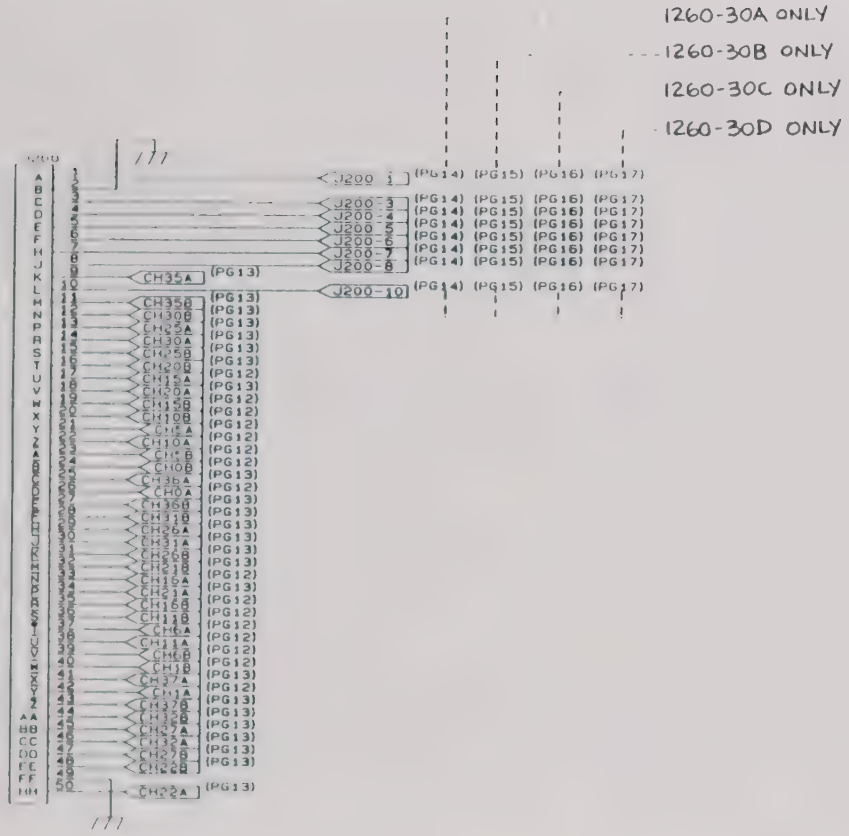

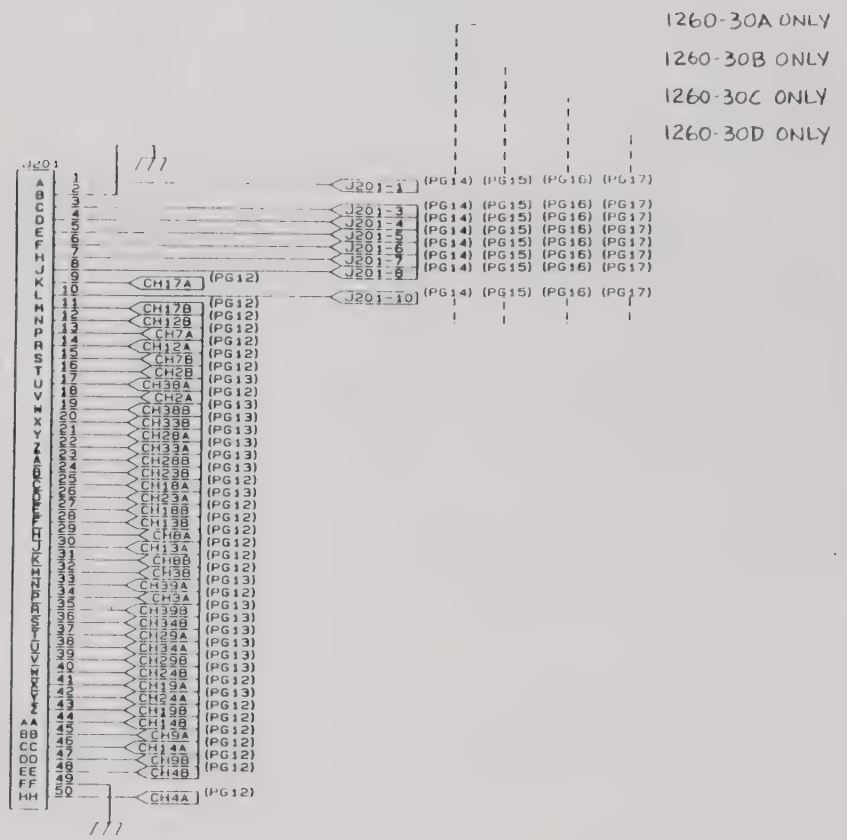

SIZE	CODE IDENT NO	DOCUMENT NO	REV
B	21793	431906	B
SCALE ———		SHEET 11 OF 17	

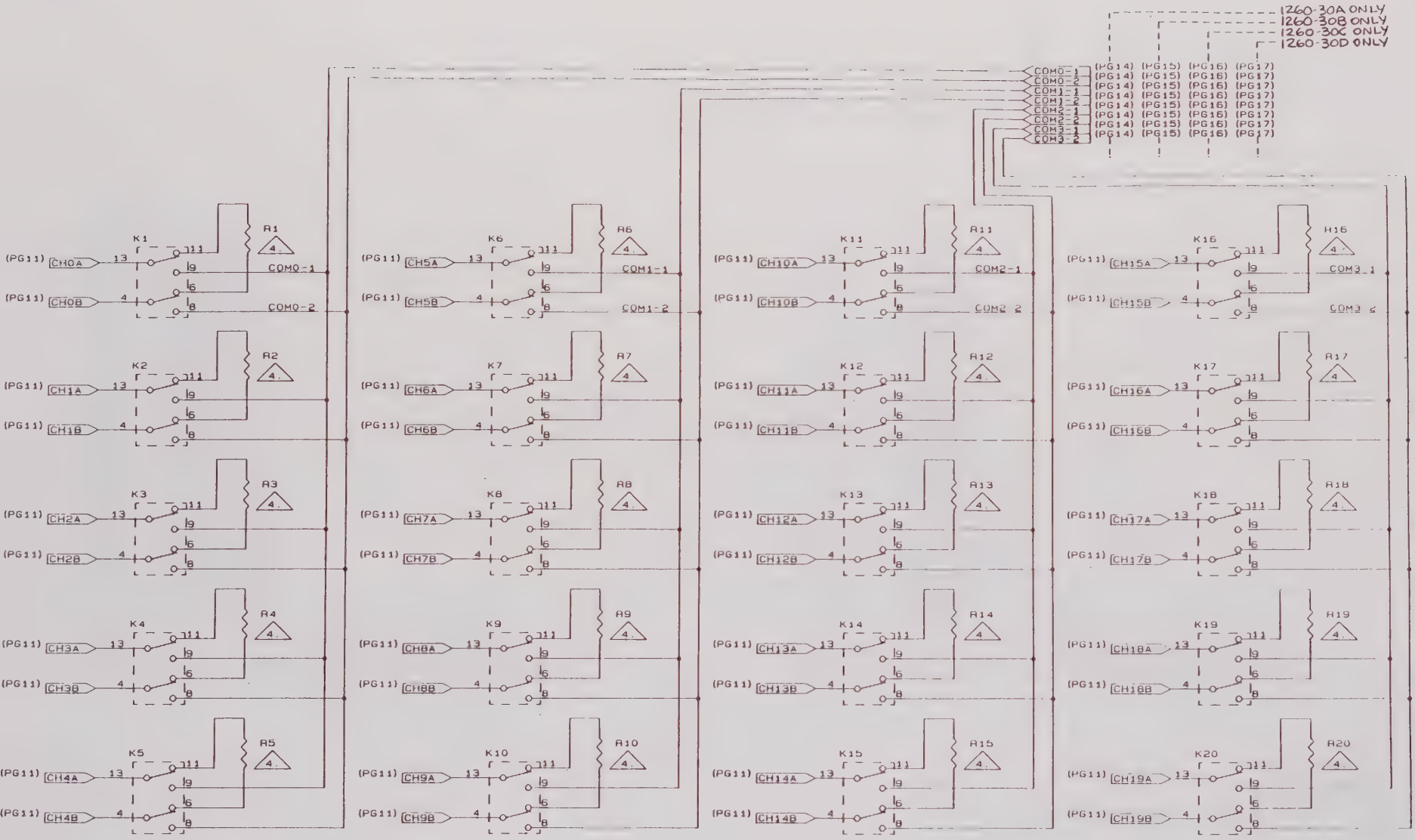

SIZE	CODE IDENT NO	DOCUMENT NO	REV
B	21793	431906	B
SCALE		SHEET 12 OF 17	

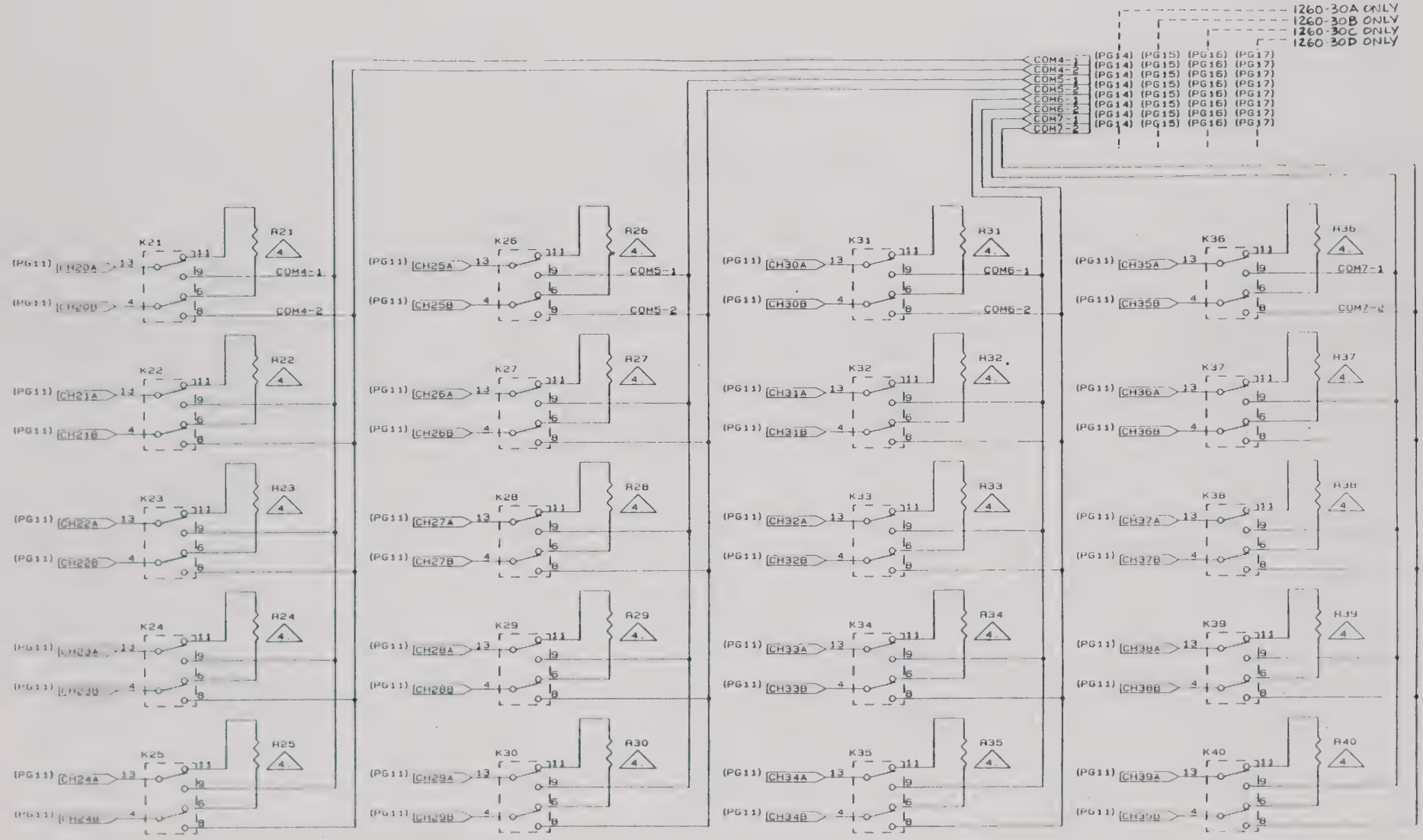

SIZE	CODE IDENT NO	DOCUMENT NO	REV
B	21793	431906	B
SCALE		SHEET 13 OF 17	

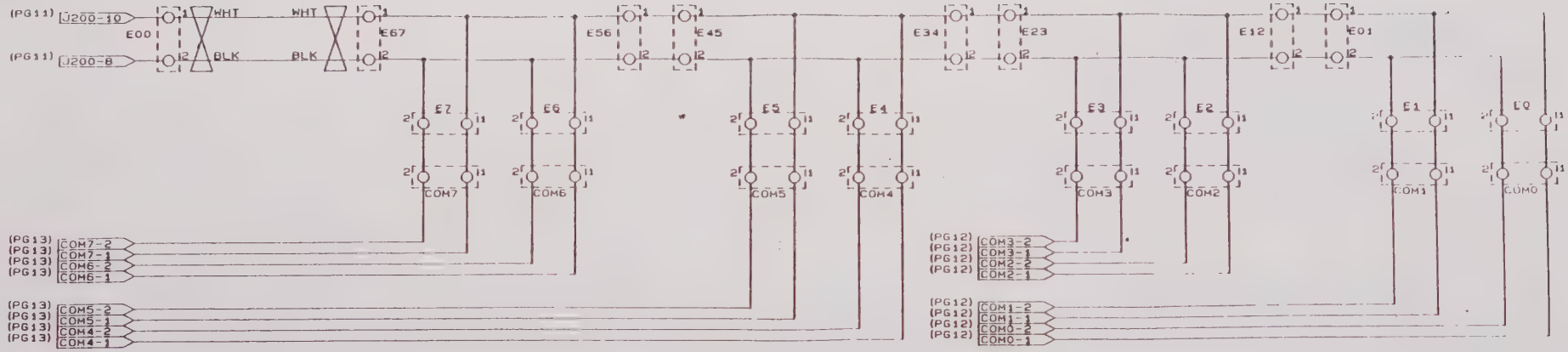

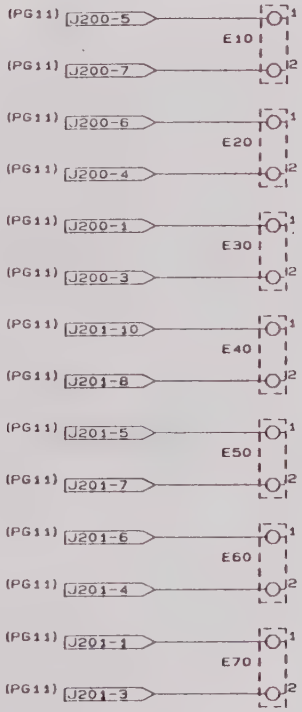

1X40 A

1260-30A ONLY

SIZE	CODE IDENT NO	DOCUMENT NO	REV
B	21793	431906	B
SCALE ———		SHEET 14 OF 17	

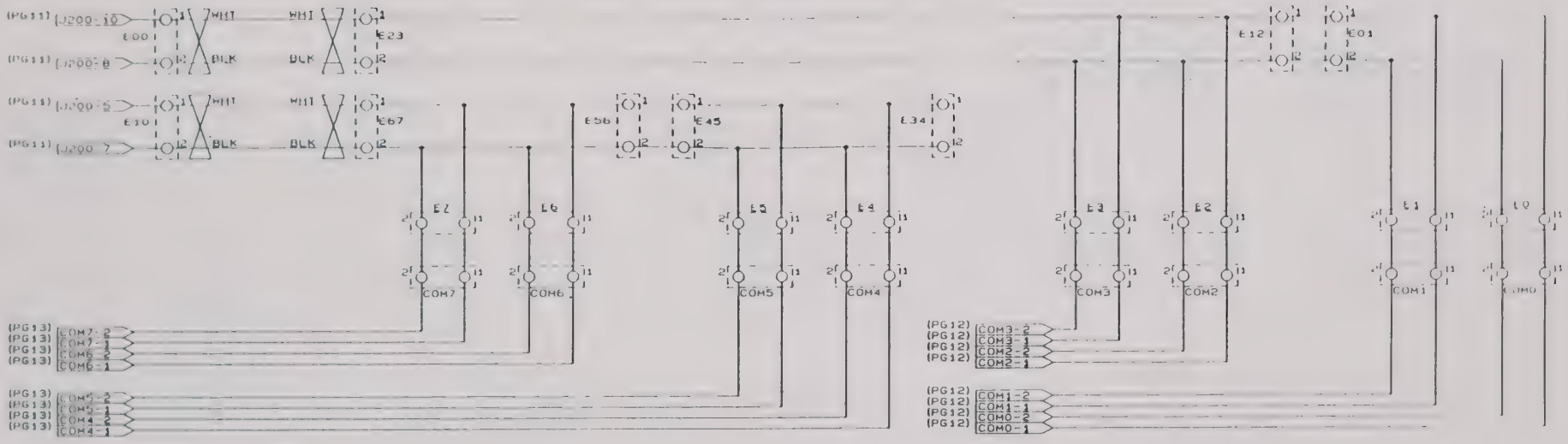

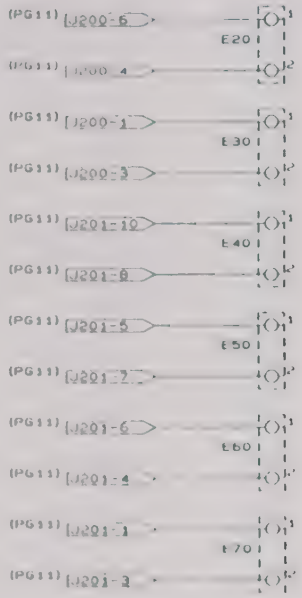

1X20 B

1260-30B ONLY

SIZE	CODE IDENT NO	DOCUMENT NO	REV
B	21793	431906	B
SCALE		SHEET 15 OF 17	

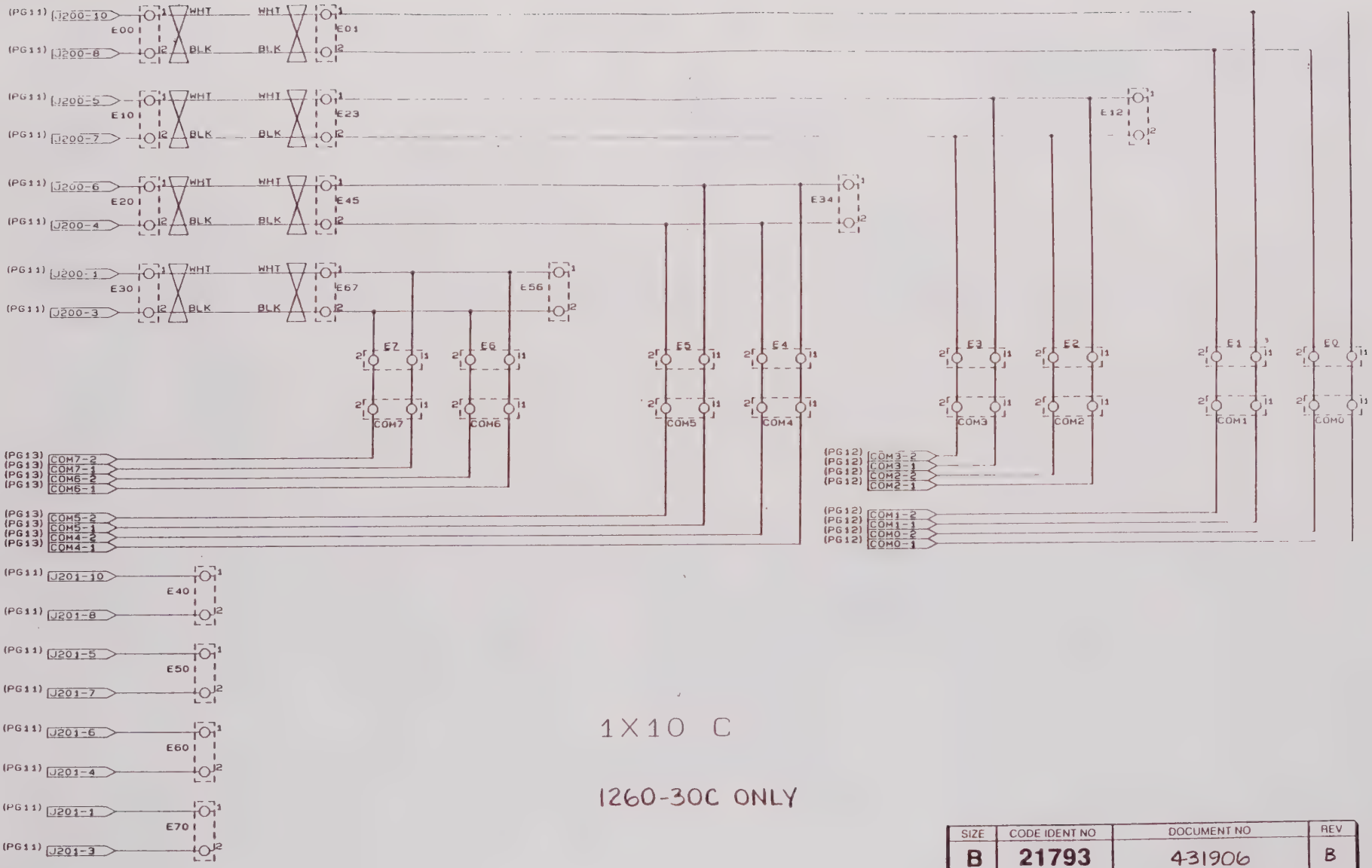

1X10 C

1260-30C ONLY

SIZE	CODE IDENT NO	DOCUMENT NO	REV
B	21793	431906	B
SCALE		SHEET 16 OF 17	

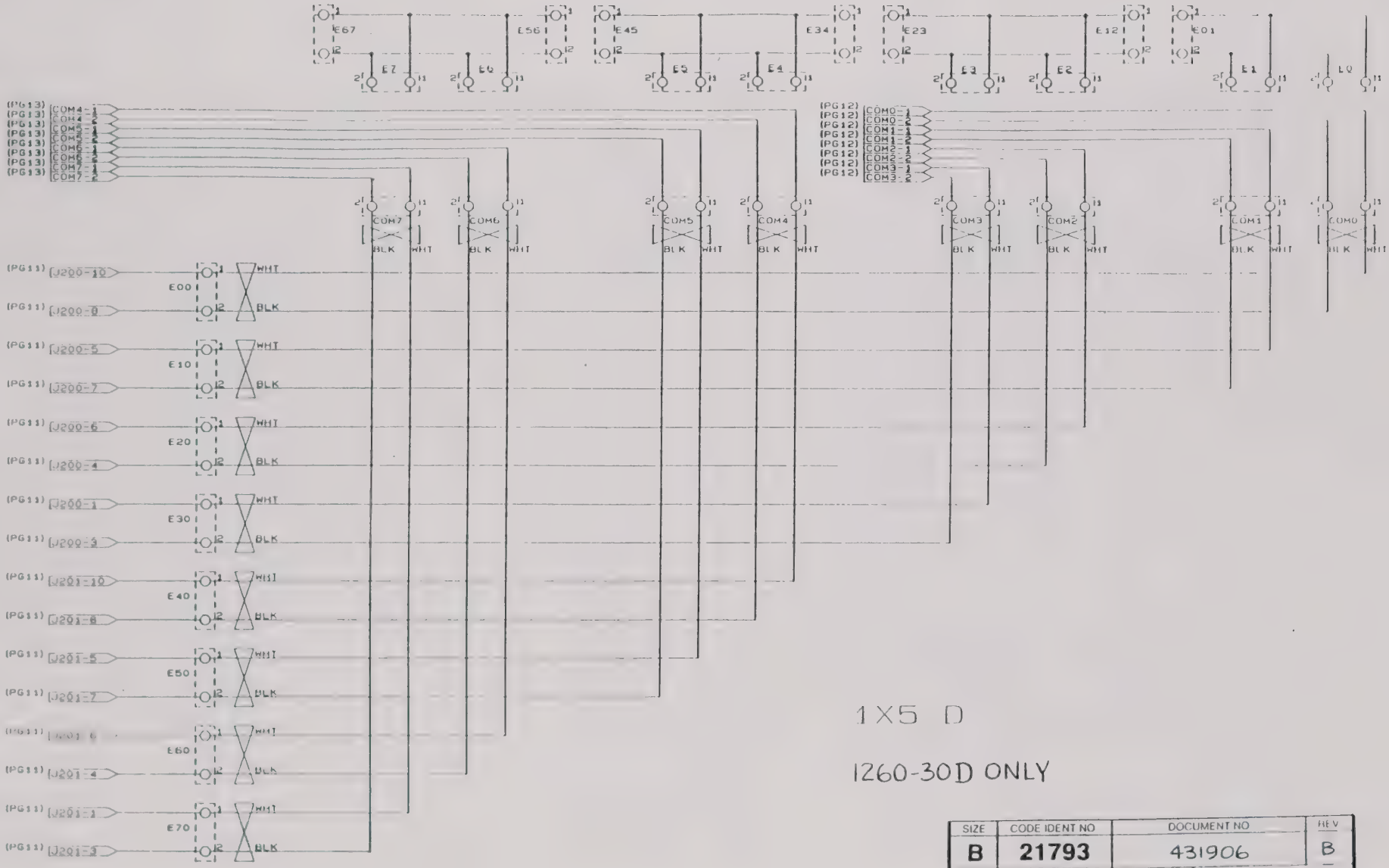

1X5 D

1260-30D ONLY

SIZE	CODE IDENT NO	DOCUMENT NO	REV
B	21793	431906	B
SCALE		SHEET 17 OF 17	

404767-001 FINAL ASSY., 1260-30A

REF DESIG	RACAL-DANA P/N	DESCRIPTION	FSC	MANUFACTURER'S P/N
{1}1	401906	PCB ASSY., 1260-30	21793	401906
{3}1	455557-001	PANEL, FRONT, 1260-30	21793	455557-001
{4}1	455524	COVER, BOTTOM	21793	455524
{5}1	455525	COVER, TOP	21793	455525
{8}2	611264	HANDLE, EXTRACTOR, BOTTOM	52559	20817-327
{9}2	611265	HANDLE, EXTRACTOR, TOP	52559	20817-328
{11}10	617101	WASHER, FLAT, LIGHT SERIES, #2	-	-
{12}10	615014	SCREW, PPH, 2-56 X .250	-	-
{13}3	615049	SCREW, PPH, 4-40 X .875	-	-
{14}6	615512	SCREW, PFH, 2-56X.188	-	-
{15}10	617126	WASHER, LOCK, #2, LIGHT SERIES	-	-
{16}3	617127	WASHER, LOCK, #4, LIGHT SERIES	-	-
{18}1	611266	MOUNTING HARDWARE, HANDLE	52559	21100-745
{19}1	921148	LABEL SET, VXI-VME	21793	921148
{21}1	921059	LABEL, CAUTION, STATIC	21793	921059
{22}1	920710	LABEL, IDENIFICATION	21793	920710
{23}1	404938	SHIPPING KIT, 1260-30	21793	404938
{24}A/R	500022	WIRE, BARE COPPER/TIN, 22 GA	21793	500022
{25}A/R	500132	WIRE, TEFLON TWISTED PR, 24GA BLK/WHT	-	-

404938 SHIPPING KIT, 1260-30

REF DESIG	RACAL-DANA P/N	DESCRIPTION	FSC	MANUFACTURER'S P/N
{3}2	455540	KEY, LOCKOUT, TTL, A/C	21793	455540
{4}2	455541	KEY, LOCKOUT, TTL, A/C	21793	455541
{5}2	455542	KEY, LOCKOUT, TTL, A/C	21793	455542
{7}2	601855-050	CONNECTOR, SGMC, CABLE PLUG	21793	601855-050
{8}100	601857	CONTACT, SGMC, MAIL	28198	M5422N
{10}3	615014	SCREW, PPH, 2-56 X .250	-	-

404767-002 FINAL ASSY., 1260-308

REF DESIG	RACAL-DANA P/N	DESCRIPTION	FSC	MANUFACTURER'S P/N
{1}1	401906	PCB ASSY., 1260-30	21793	401906
{3}1	455557-001	PANEL, FRONT, 1260-30	21793	455557-001
{4}1	455524	COVER, BOTTOM	21793	455524
{5}1	455525	COVER, TOP	21793	455525
{8}2	611264	HANDLE, EXTRACTOR, BOTTOM	62559	20817-327
{9}2	611265	HANDLE, EXTRACTOR, TOP	62559	20817-328
{11}10	617101	WASHER, FLAT, LIGHT SERIES, #2	-	-
{12}10	615014	SCREW, PPH, 2-56 X .250	-	-
{13}3	615049	SCREW, PPH, 4-40 X .875	-	-
{14}6	615512	SCREW, PFH, 2-56X.188	-	-
{15}10	617126	WASHER, LOCK, #2, LIGHT SERIES	-	-
{16}3	617127	WASHER, LOCK, #4, LIGHT SERIES	-	-
{18}1	611266	MOUNTING HARDWARE, HANDLE	62559	21100-745
{19}1	921148	LABEL SET, VXI-VME	21793	921148
{21}1	921059	LABEL, CAUTION, STATIC	21793	921059
{22}1	920710	LABEL, IDENIFICATION	21793	920710
{23}1	404938	SHIPPING KIT, 1260-30	21793	404938
{24}A/R	500022	WIRE, BARE COPPER/TIN, 22 GA	21793	500022
{25}A/R	500132	WIRE, TEFLON TWISTED PR, 24GA BLK/WHT	-	-

404767-003 FINAL ASSY., 1260-30C

REF DESIG	RACAL-DANA P/N	DESCRIPTION	FSC	MANUFACTURER'S P/N
{1}1	401906	PCB ASSY., 1260-30	21793	401906
{3}1	455557-001	PANEL, FRONT, 1260-30	21793	455557-001
{4}1	455524	COVER, BOTTOM	21793	455524
{5}1	455525	COVER, TOP	21793	455525
{8}2	611264	HANDLE, EXTRACTOR, BOTTOM	62559	20817-327
{9}2	611265	HANDLE, EXTRACTOR, TOP	62559	20817-328
{11}10	617101	WASHER, FLAT, LIGHT SERIES, #2	-	-
{12}10	615014	SCREW, PPH, 2-56 X .250	-	-
{13}3	615049	SCREW, PPH, 4-40 X .875	-	-
{14}6	615512	SCREW, PFH, 2-56X.188	-	-
{15}10	617126	WASHER, LOCK, #2, LIGHT SERIES	-	-
{16}3	617127	WASHER, LOCK, #4, LIGHT SERIES	-	-
{18}1	611266	MOUNTING HARDWARE, HANDLE	62559	21100-745
{19}1	921148	LABEL SET, VXI-VME	21793	921148
{21}1	921059	LABEL, CAUTION, STATIC	21793	921059
{22}1	920710	LABEL, IDENIFICATION	21793	920710
{23}1	404938	SHIPPING KIT, 1260-30	21793	404938
{24}A/R	500022	WIRE, BARE COPPER/TIN, 22 GA	21793	500022
{25}A/R	500132	WIRE, TEFLON TWISTED PR, 24GA BLK/WHT	-	-

404767-004 FINAL ASSY., 1260-30D

REF DESIG	RACAL-DANA P/N	DESCRIPTION	FSC	MANUFACTURER'S P/N
{1}1	401906	PCB ASSY., 1260-30	21793	401906
{3}1	455557-001	PANEL, FRONT, 1260-30	21793	455557-001
{4}1	455524	COVER, BOTTOM	21793	455524
{5}1	455525	COVER, TOP	21793	455525
{8}2	611264	HANDLE, EXTRACTOR, BOTTOM	62559	20817-327
{9}2	611265	HANDLE, EXTRACTOR, TOP	62559	20817-328
{11}10	617101	WASHER, FLAT, LIGHT SERIES, #2	-	-
{12}10	615014	SCREW, PPH, 2-56 X .250	-	-
{13}3	615049	SCREW, PPH, 4-40 X .875	-	-
{14}6	615512	SCREW, PFH, 2-56X.188	-	-
{15}10	617126	WASHER, LOCK, #2, LIGHT SERIES	-	-
{16}3	617127	WASHER, LOCK, #4, LIGHT SERIES	-	-
{18}1	611266	MOUNTING HARDWARE, HANDLE	62559	21100-745
{19}1	921148	LABEL SET, VXI-VME	21793	921148
{21}1	921059	LABEL, CAUTION, STATIC	21793	921059
{22}1	920710	LABEL, IDENIFICATION	21793	920710
{23}1	404938	SHIPPING KIT, 1260-30	21793	404938
{24}A/R	500022	WIRE, BARE COPPER/TIN, 22 GA	21793	500022
{25}A/R	500132	WIRE, TEFLON TWISTED PR, 24GA BLK/WHT	-	-

401906 PCB ASSY., 1260-30

REF DESIG	RACAL-DANA P/N	DESCRIPTION	FSC	MANUFACTURER'S P/N
C1	110126	CAP, TANTA, 6.8UF, 35V, 20 PERCENT	05397	T355F685M035A5
C2	110126	CAP, TANTA, 6.8UF, 35V, 20 PERCENT	05397	T355F685M035A5
C3	110126	CAP, TANTA, 6.8UF, 35V, 20 PERCENT	05397	T355F685M035A5
C4	110126	CAP, TANTA, 6.8UF, 35V, 20 PERCENT	05397	T355F685M035A5
C100-C101	R-21-1801	CAP, CHIP, 10 NF	95275	VJ1206Y103MF
C102	130177	CAPACITOR, CHIP, SMD, 270PF	95275	VJ1206A271KXAMT
C103-C122	R-21-1801	CAP, CHIP, 10 NF	95275	VJ1206Y103MF
J3	601925	CONNECTOR, PCB, RECEPT, 3 ROW, 96P	52072	618008
J4	601925	CONNECTOR, PCB, RECEPT, 3 ROW, 96P	52072	618008
J200,J201	601856-050	CONNECTOR, SMPL, PCB RECEPT	21793	601856-050
K1-K40	310196	RELAY, 2FORM C	61529	DS2YE-S-DC24V
L1	100164	CAP, FEED-THRU,800PF, 50V	00779	842448-2
L2	310193	CHOKE, SHIELDED, 5UH	91637	IH-5-5-10
L3	310193	CHOKE, SHIELDED, 5UH	91637	IH-5-5-10
L4	100164	CAP, FEED-THRU,800PF, 50V	00779	842448-2
L5	600245	JUMPER, INSULATED	52210	L-2007-1
P1-P2	601675	CONNECTOR, EUROCARD TYPE C, 96-PIN	00779	532505-1
S1	R-23-4102	SWITCH,6-WAY,SINGLE THROW	3V841	206-006ST
S2	601915	SWITCH, DIP 6 POS, SMD	91506	ADF-06ST
S3	601915	SWITCH, DIP 6 POS, SMD	91506	ADF-06ST
TP1-TP2	601197	POST, TEST, .025 SQ	00779	6-87022-6
U1	231152	IC, PROGRAMMED PIA	21793	231152
U2	231153	IC, PROGRAMMED PLA	21793	231153
U3	231154	IC, PROGRAMMED PLA	21793	231154
U4	231147	IC, MULTIPLEXER	04713	74HC253D
U5	231147	IC, MULTIPLEXER	04713	74HC253D
U6	231125	IC, DIGITAL, LINE DRIVER	27014	DS26LS31MN
U7	231096	IC, QUAD DIFF RECEIVER	01295	AM26LS32ACD
U8	231096	IC, QUAD DIFF RECEIVER	01295	AM26LS32ACD
U9	231093	IC, QUAD COMPARATOR	04713	LM339D
U10	231120	IC, 8-BIT, PARALLEL/SERIAL OUT S.R.	18324	74HCT166D
U11	231131	IC, DIGITAL, SHIFT REGISTER	18324	PC74HCT164D
U12	231131	IC, DIGITAL, SHIFT REGISTER	18324	PC74HCT164D
U13	231094	IC, DEMUX DECODER	18324	N74LS138D
U14	231135	IC, DIGITAL, 4-BIT COMPARATOR	18324	PC74HCT85D
U15	231131	IC, DIGITAL, SHIFT REGISTER	18324	PC74HCT164D
U16	231130	IC, DIGITAL, FLIP FLOP	18324	PC74HC273
U17	231098	IC, SOIC TRANSISTOR	56289	ULN-2803LW
U18	231120	IC, 8-BIT, PARALLEL/SERIAL OUT S.R.	18324	74HCT166D
U19	231131	IC, DIGITAL, SHIFT REGISTER	18324	PC74HCT164D
U20	231130	IC, DIGITAL, FLIP FLOP	18324	PC74HC273
U21	231098	IC, SOIC TRANSISTOR	56289	ULN-2803LW
U22	231120	IC, 8-BIT, PARALLEL/SERIAL OUT S.R.	18324	74HCT166D
U23	231131	IC, DIGITAL, SHIFT REGISTER	18324	PC74HCT164D
U24	231130	IC, DIGITAL, FLIP FLOP	18324	PC74HC273
U25	231098	IC, SOIC TRANSISTOR	56289	ULN-2803LW
U26	231120	IC, 8-BIT, PARALLEL/SERIAL OUT S.R.	18324	74HCT166D
U27	231131	IC, DIGITAL, SHIFT REGISTER	18324	PC74HCT164D
U28	231130	IC, DIGITAL, FLIP FLOP	18324	PC74HC273
U29	231098	IC, SOIC TRANSISTOR	56289	ULN-2803LW
U30	231120	IC, 8-BIT, PARALLEL/SERIAL OUT S.R.	18324	74HCT166D
U31	231131	IC, DIGITAL, SHIFT REGISTER	18324	PC74HCT164D
U32	231130	IC, DIGITAL, FLIP FLOP	18324	PC74HC273

401906 PCB ASSY., 1260-30

REF DESIG	RACAL-DANA P/N	DESCRIPTION	FSC	MANUFACTURER'S P/N
U33	231098	IC, SOIC TRANSISTOR	56289	ULN-2803LW
U34	231120	IC, 8-BIT, PARALLEL/SERIAL OUT S.R.	18324	74HCT166D
Z1	080114	RES NETWORK, 16P8R, 15K	73138	628-AL-153J
Z2	080120	RES NETWORK, 10K	11236	767-161R10K
Z3	080119	RES NETWORK, 220K	91637	SOMC-1603-224K
Z4	080117	RES NETWORK, 16P8R, 47K	73138	628-AL-473J
Z5	080119	RES NETWORK, 220K	91637	SOMC-1603-224K
Z6	080117	RES NETWORK, 16P8R, 47K	73138	628-AL-473J
Z7	080119	RES NETWORK, 220K	91637	SOMC-1603-224K
Z8	080117	RES NETWORK, 16P8R, 47K	73138	628-AL-473J
Z9	080119	RES NETWORK, 220K	91637	SOMC-1603-224K
Z10	080117	RES NETWORK, 16P8R, 47K	73138	628-AL-473J
Z11	080119	RES NETWORK, 220K	91637	SOMC-1603-224K
Z12	080117	RES NETWORK, 16P8R, 47K	73138	628-AL-473J
{43}1	401951	PCB ASSY., LBUS JUMPER	21793	401951
{44}1	411906	PCB, SCANNER/MUX (UNLOADED)	21793	411906
{47}A/R	500022	WIRE, BARE COPPER/TIN, 22 GA	21793	500022
{62}3	611227	SPACER, PRESS, #4, PCB	46384	KFSE-116-20
{63}4	615012	SCREW, PPH, 2-56 X .125	-	-
{70}A/R	920962	LOCTITE, 242, MED STR.	05972	272

WIRE LIST

FROM	TO	CONDUCTOR TYPE, GAUGE, COLOR	PART NUMBER	WIRE LENGTH	REFERENCE
COM0-1	E0-1	BARE COPPER, 22GA	500022	A/R	BUS
COM0-2	E0-2				
COM1-1	E1-1				
COM1-2	E1-2				
COM2-1	E2-1				
COM2-2	E2-2				
COM3-1	E3-1				
COM3-2	E3-2				
COM4-1	E4-1				
COM4-2	E4-2				
COM5-1	E5-1				
COM5-2	E5-2				
COM6-1	E6-1				
COM6-2	E6-2				
COM7-1	E7-1				
COM7-2	E7-2				
E01-1	E12-1				
E01-2	E12-2				
E23-1	E34-1				
E23-2	E34-2	BARE COPPER, 22GA	500022	A/R	BUS

RACAL-DANA Instruments Inc. 4 GOODYEAR, IRVINE, CALIFORNIA 92714

DOCUMENT TITLE	SIZE	CODE IDENT NO.	DOCUMENT NO	REV
FINAL ASSY., 1260-30A	A	21793	404767-001	B
	DRN K. MONROE			

WIRE LIST

FROM	TO	CONDUCTOR TYPE, GAUGE, COLOR	PART NUMBER	WIRE LENGTH	REFERENCE
E45-1	E56-1	BARE COPPER, 22GA	500022	A/R	BUS
E45-2	E56-2	BARE COPPER, 22GA	500022	A/R	BUS
E67-1	E00-1	TEF, STR, 24GA, WHT	500132	A/R	TWISTED PAIR
E67-2	E00-2	TEF, STR, 24GA, BLK	500132	A/R	

RACAL-DANA Instruments Inc. 4 GOODYEAR, IRVINE, CALIFORNIA 92714

DOCUMENT TITLE	SIZE	CODE CENT NO	DOCUMENT NO	REV.
FINAL ASSY., 1260-30A	A	21793	404767-001	B
	DRN K. MONROE			

WIRE LIST

FROM	TO	CONDUCTOR TYPE, GAUGE, COLOR	PART NUMBER	WIRE LENGTH	REFERENCE
COM0-1	E0-1	BARE COPPER, 22GA	500022	A/R	BUS
COM0-2	E0-2				
COM1-1	E1-1				
COM1-2	E1-2				
COM2-1	E2-1				
COM2-2	E2-2				
COM3-1	E3-1				
COM3-2	E3-2				
COM4-1	E4-1				
COM4-2	E4-2				
COM5-1	E5-1				
COM5-2	E5-2				
COM6-1	E6-1				
COM6-2	E6-2				
COM7-1	E7-1				
COM7-2	E7-2				
E01-1	E12-1				
E01-2	E12-2				
E45-1	E56-1				
E45-2	E56-2				
		BARE COPPER, 22GA	500022	A/R	BUS

RACAL-DANA Instruments Inc. 4 GOODYEAR, IRVINE, CALIFORNIA 92714

DOCUMENT TITLE	SIZE	CODE IDENT NO	DOCUMENT NO	REV
FINAL ASSY., 1260-30B	A	21793	404767-002	B
	DRN K. MONROE			

WIRE · LIST

FROM	TO	CONDUCTOR TYPE, GAUGE, COLOR	PART NUMBER	WIRE LENGTH	REFERENCE
E23-1	E00-1	TEF,STR,24GA WHT	500132	A/r	TWISTED PAIR
E23-2	E00-2	" BLK	"	"	
E67-1	E10-1	" WHT	"	"	TWISTED PAIR
E67-2	E10-2	TEF,STR,24GA BLK	500132	A/R	

RACAL-DANA Instruments Inc. 4 GOODYEAR, IRVINE, CALIFORNIA 92714

DOCUMENT TITLE	SIZE	CODE IDENT NO	DOCUMENT NO	REV
FINAL ASSY., 1260-30B	A	21793	404767-002	B
	DRN K. MONROE			

WIRE LIST

FROM	TO	CONDUCTOR TYPE, GAUGE, COLOR	PART NUMBER	WIRE LENGTH	REFERENCE
COM0-1	E0-1	BARE COPPER,22GA	500022	A/R	BUS
COM0-2	E0-2				
COM1-1	E1-1				
COM1-2	E1-2				
COM2-1	E2-1				
COM2-2	E2-2				
COM3-1	E3-1				
COM3-2	E3-2				
COM4-1	E4-1				
COM4-2	E4-2				
COM5-1	E5-1				
COM5-2	E5-2				
COM6-1	E6-1				
COM6-2	E6-2				
COM7-1	E7-1				
COM7-2	E7-2				
		BARE COPPER,22GA	500022	A/R	BUS
E01-1	E00-1	TEF,STR,24GA WHT	500132	A/R	TWISTED PAIR
E01-2	E00-2	" BLK	"	"	
E23-1	E10-1	" WHT	"	"	TWISTED PAIR
E23-2	E10-2	TEF,STR,24GA BLK	500132	A/R	

RACAL-DANA Instruments Inc. 4 GOODYEAR, IRVINE, CALIFORNIA 92714

DOCUMENT TITLE	SIZE	CODE IDENT NO.	DOCUMENT NO.	REV
FINAL ASSY., 1260-30C	A	21793	404767-003	B
	DRN K.MONROE			

WIRE LIST

FROM	TO	CONDUCTOR TYPE, GAUGE, COLOR	PART NUMBER	WIRE LENGTH	REFERENCE
E45-1	E20-1	TEF,STR,24GA WHT	500132	A/R	TWISTED PAIR
E45-2	E20-2	" BLK	"	"	
E67-1	E30-1	" WHT	"	"	TWISTED PAIR
E67-2	E30-2	TEF,STR,24GA BLK	500132	A/R	

RACAL-DANA Instruments Inc. 4 GOODYEAR, IRVINE, CALIFORNIA 92714

DOCUMENT TITLE	SIZE	CODE IDENT NO	DOCUMENT NO	REV
FINAL ASSY., 1260-30C	A	21793	404767-003	B
	DRN K. MONROE			

WIRE LIST

FROM	TO	CONDUCTOR TYPE, GAUGE, COLOR	PART NUMBER	WIRE LENGTH	REFERENCE
COM0-1	E00-1	TEF,STR,24GA WHT	500132	A/R	TWISTED
COM0-2	E00-2	" BLK			PAIR
COM1-1	E10-1	" WHT			"
COM1-2	E10-2	" BLK			
COM2-1	E20-1	" WHT			"
COM2-2	E20-2	" BLK			
COM3-1	E30-1	" WHT			"
COM3-2	E30-2	" BLK			
COM4-1	E40-1	" WHT			"
COM4-2	E40-2	" BLK			
COM5-1	E50-1	" WHT			"
COM5-2	E50-2	" BLK			
COM6-1	E60-1	" WHT			"
COM6-2	E60-2	" BLK			
COM7-1	E70-1	" WHT			TWISTED
COM7-2	E70-2	TEF,STR,24GA BLK	500132	A/R	PAIR

RACAL-DANA Instruments Inc. 4 GOODYEAR, IRVINE, CALIFORNIA 92714

DOCUMENT TITLE	SIZE	CODE IDENT NO.	DOCUMENT NO.	REV
FINAL ASSY., 1260-30D	A	21793	404767-004	B
	DRN K. MONROE			

List of Suppliers

FSC	SUPPLIER
00779	AMP INC. HARRISBURG, PA
01295	TEXAS INSTRUMENTS INC. DALLAS, TX
01526	GENICOM CORP. WAYNESBORO, VA
02735	RCA (SOLID STATE DIV.) SOMERVILLE, NEW JERSEY
03508	GENERAL ELECTRIC CO. (SEMI-CONDUCTOR PRODUCTS) AUBURN, NY
04713	MOTOROLA INC. (SEMICONDUCTOR PRODUCTS DIV) PHOENIX, AZ
05397	UNION CARBIDE CORP (MATERIALS SYSTEMS DIV) CLEVELAND, OHIO
05972	LOCTITE CORP HARTFORD, CONN
06383	PANDUIT CORP TINLEY PARK, CA
06540	AMATOM ELECTRONIC HARDWARE NEW ROCHELLE, NY
06776	ROBINSON NUGENT INC. NEW ALBANY, IN
07263	FAIRCHILD (SEMICONDUCTOR DIV.) MOUNTAIN VIEW, CA
08261	SPECTRA-STRIP CORP GARDEN GROVE, CA
11236	CTS OF BERNE INC. BERNE, INDIANA
16956	DENNISON MFG. CO. FRAMINGTON, MA
18324	SIGNETICS INC. SUNNYVALE, CA
21793	RACAL-DANA INSTRUMENTS INC. IRVINE, CA
22526	DUPONT CONNECTOR CO. NEW CUMBERLAND, PA
27014	NATIONAL SEMI-CONDUCTOR CORP. SANTA CLARA, CA
29005	STORM PRODUCTS CO. LOS ANGELES, CA
34359	THREE (3) M CO. (COMMERCIAL TAPE DIV.) ST. PAUL, MN
52072	CIRCUIT ASSY. CORP. COSTA MESA, CA
52210	GETTING ENGRG & MFG. CO. SPRING MILLS, PA
53387	THREE (3) M CO. ST. PAUL, MN
55322	SAMTEC, INC. NEW ALBANY, IN
56289	SPAGUE ELECTRIC CO. N. ADAMS, MA
61529	AROMAT CORP. CUPERTINO, CA
62559	SCHROFF, INC. WARWICK, RI
65832	AMERICAN RESEARCH ENGRG ELGIN, IL
70903	BELDEN CORP. CHICAGO, IL
73138	BECKMAN INSTRUMENTS FULLERTON, CA
73445	AMPEREX ELECTRONIC CORP. HICKSVILLE, NY
78189	ILLINOIS TOOL WORKS, INC. (SHAKEPROOF, DIV.) ELGIN, IL
81349	MILITARY SPECIFICATION
86928	SEASTROM MFG CO. INC. GLENDALE, CA
91637	DALE ELECTRONICS INC. COLUMBUS, NEBRASKA
92194	ALPHA WIRE ELIZABETH, NEW JERSEY
95275	VITRAMON, INC. BRIDGEPORT, CONNECTICUT
98291	SEALECTRO CORP. MAMARONECK, NY

1260-35 SIGNAL MULTIPLEXER/SCANNER

1260 VXI SWITCHING CARD

RACAL-DANA

RACAL-DANA INSTRUMENTS INC.

4 Goodyear Street, P.O. Box C-19541, Irvine, CA 92713
Telephone: 714/859-8999, Fax: 714/859-2505

RACAL INSTRUMENTS, LTD.

480 Bath Road, Slough, Berkshire, SL1 6BE, England
Telephone: 44-628 604455, Fax: 44-628 662017

RACAL SYSTEMS ELECTRONIQUE S.A.

18 Avenue Dutartre, 78150 Le Chesnay, France
Telephone: 33-1-3-955-8888, Fax: 33-1-3-955-6735

RACAL ELEKTRONIK SYSTEMS GmbH

Frankenforster Strasse 21, D-5060 Bergisch-Gladbach 1, Federal Republic of Germany
Telephone: 49-22-04-60081, Fax: 49-22-04-21491

RACAL SYSTEMS ELETTRONICA

Via Roma, 108/PAL, E1, 20060 Cassina de Pecchi, Milan, Italy
Telephone: 39-2-9514717/737/770, Fax: 39-2-9514522

PUBLICATION DATE: APRIL 1992

Copyright ©1992 by Racal-Dana Instruments Inc. Printed in the United States of America. All rights reserved.
This book or parts thereof may not be reproduced in any form without written permission of the publishers.

TABLE OF CONTENTS

1260-35 SIGNAL MULTIPLEXER/SCANNER MODULE

1.0	1260-35 Module Specification	1-1
2.0	Installation Instructions	1-3
2.1	Unpacking and Inspection	1-3
2.2	Reshipment Instructions	1-3
2.3	Option 01 Installation	1-3
2.4	Module Installation	1-3
2.4.1	1260-35 ID Byte	1-4
2.4.2	Configuration Jumpers	1-4
2.4.3	Analog Bus	1-5
3.0	1260-35 Module Specific Syntax	1-6
3.1	Syntax	1-6
4.0	Drawings	1-13
5.0	Parts List	1-40

TABLES

2-1	1260-35 Jumper Installation	1-5
3-1	1260-35 Channel Closure	1-8

FIGURES

3-1	1260-35 Block Diagram	1-11
3-2	1260-35 Pin Connections	1-12

1.0 1260-35 Module Specification

The 1260-35 Signal Multiplexer/Scanner Module is a 1 x 96 multiplexer. It switches two lines per channel and has the capability of being configured as two 1 x 48 multiplexers, four 1 x 24 multiplexers, eight 1 x 12 multiplexers, or sixteen 1 x 6 multiplexers. The configuration is user selectable, but is supplied by the factory in one 1 x 96 two-wire mode. A block diagram of the module is shown in Figure 3-1.

Specifications

Switch Configurations	
1260-35A:	Four-wire mode, any configuration
1260-35B:	Two-wire mode, any configuration
User Connector	IDC Quick Disconnect
Maximum Switchable Voltage (Terminal-Terminal or Terminal Chassis)	110 VDC, 125 VAC RMS
Maximum Switchable Current Per Channel	1 ADC, 1 A RMS
Maximum Switchable Power Per Channel	30 WDC, 62.5 VA AC
Path Resistance	< 0.5 ohm (1 x 6 configuration) < 1.0 ohm (1 x 96 configuration)
Isolation Hi-Lo	> 7.5×10^8 ohms
Capacitance	
Open Channel:	< 600pf (1 x 96 configuration)
Channel-Chassis:	< 60pf (1 x 6 configuration) < 200pf (1 x 96 configuration)
Hi-Lo:	< 50pf (1 x 6 configuration) < 600pf (1 x 96 configuration)
Bandwidth (50 ohm Termination)	> 50 MHz (1 x 6 configuration) > 15 MHz (1 x 45 configuration)
Insertion Loss (50 ohm Termination) 1 x 6 Configuration	< .1 dB to 100KHz < .5 dB to 1MHz < 1 dB to 10MHz
Insertion Loss (50 ohm Termination)	< 3 dB to 8MHz

1 x 96 Configuration

Crosstalk, 50 ohm Termination	< -90 dB to 100KHz < -70 dB to 1 MHz < -23 dB to 10MHz
Switching Time	2ms
Minimum Option 01 Firmware Revision	6.1

2.0 Installation Instructions

2.1 Unpacking and Inspection

Before unpacking the switching module, check the exterior of the shipping carton for any signs of damage. All irregularities should be noted on the shipping bill. Remove the instrument from its carton, preserving the factory packaging as much as possible. Inspect the switching module for any defect or damage. Immediately notify the carrier if any damage is apparent. Have a qualified person check the instrument for safety before use.

2.2 Reshipment Instructions

Use the original packing when returning the switching module to Racal-Dana for calibration or servicing. The original shipping carton and the instrument's plastic foam will provide the necessary support for safe reshipment. If the original packing is unavailable, wrap the switching module in plastic sheeting and use plastic spray foam to surround and protect the instrument. Reship in either the original or a new shipping carton.

2.3 Option 01 Installation

Installation of the Option 01 to the 1260-35 is described in the Installation section of the 1260 Series VXI Switching Cards Manual.

2.4 Module Installation

Installation of the 1260-35 Switching Module into a VXI mainframe, including the setting of DIP switches, is described in the Installation section of the 1260 Series VXI Switching Cards Manual. Configuration of the PCBA and setting DIP switches S1-5 and S1-6 are described in the following sections.

2.4.1 1260-35 ID Byte

Each configuration will respond to different sets of values for <channel number>. The set of values the 1260-35 will respond to is controlled by switch 5 on DIP switch S1 on the PCB. The switch settings that correspond to the two configurations are as follows:

Model	Configuration	S1 Switch 5	S1 Switch 6
1260-35A	Four-wire	Off	Off
1260-35B	Two-wire	On	Off

2.4.2 Configuration Jumpers

2.4.2.1 The 1260-35 Scanner / Multiplexer Module is a user configurable switching module that may be configured in ten different configurations as follows:

1) Sixteen 1 x 6 two-wire scanner/multiplexers
2) Eight 1 x 6 four-wire scanner/multiplexers
3) Eight 1 x 12 two-wire scanner/multiplexers
4) Four 1 x 12 four-wire scanner/multiplexers
5) Four 1 x 24 two-wire scanner/multiplexers
6) Two 1 x 24 four-wire scanner/multiplexers
7) Two 1 x 48 two-wire scanner/multiplexers
8) One 1 x 48 four-wire scanner/multiplexers
9) One 1 x 96 two-wire scanner/multiplexers
10) One 1 x 192 one-wire scanner/multiplexers

2.4.2.2 The 1260-35 is shipped from the factory in the 1 x 192 single wire configuration. Table 2-1 gives the information necessary to configure the module into the other possible configurations.

Table 2-1, 1260-35 Jumper Installation

An X indicates a jumper is to be fitted. An (X) indicates the jumper is optional. depending on whether access to the analog bus is required. A blank indicates no jumper is to be fitted.

16(1x6) 2-wire	8(1x6) 4-wire	8(1x12) 2-wire	4(1x12) 4-wire	4(1x24) 2-wire	2(1x24) 4-wire	2(1x48) 2-wire	1(1x48) 4-wire	1(1x96) 2-wire
W2A,B						(X)	(X)	(X)
W3A,B		X	X	X	X	X	X	X
W4A,B				X	X	X	X	X
W5A,B		X	X	X	X	X	X	X
W6A,B						X	X	X
W7A,B								X
W8A,B		X	X	X	X	X	X	X
W9A,B				X	X	X	X	X
W10A,B		X	X	X	X	X	X	X
W11A,B						1(1x192) 1-WIRE ONLY--->		X
W12A,B		X	X	X	X	X	X	X
W13A,B				X	X	X	X	X
W14A,B		X	X	X	X	X	X	X
W15A,B								X
W16A,B						X	X	X
W17A,B		X	X	X	X	X	X	X
W18A,B				X	X	X	X	X
W19A,B		X	X	X	X	X	X	X
W20A,B						(X)	(X)	(X)

2.4.3 Analog Bus

2.4.3.1 In most of the above configurations, the 1260-35 may be user configured to access an analog bus. The analog bus allows internal expansion for the configuration of larger scanner/multiplexers than the module may achieve alone.

2.4.3.2 To connect the module to the analog bus, install jumpers W2A, W2B, W20A, and W20B.

3.0 1260-35 Module Specific Syntax

The Module Specific Syntax for the 1260-35 is required in the use of the OPEN and CLOSE commands. It will also appear in data output by the Master in response to the PDATAOUT and PSETUP commands.

3.1 Syntax

3.1.1 The Module Specific Syntax for the 1260-35 Signal Multiplexer/Scanner module is as follows:

<module address>.<channel number>

where <module address> is the address.

<channel number> is the reference number of the channel to be closed, value 0 - 96 in the two-wire mode and 0-47 in the four-wire mode.

NOTE

The <module address> used here is not the VXIbus defined logical address of the 1260 Series Master. It is peculiar to the 1260 Series and describes the switching module in relation to the Master. This address corresponds to the binary value of the switch setting of SW1 on the switching module PCB.

3.1.2 The actual mapping of number to connector pins is given in Table 3-1. Figure 3-1 shows the physical location of the various connector pins.

3.1.3 The one-wire mode is not supported by software, although scanning in the one-wire mode can be accomplished by utilizing non-vol memory locations. To execute a one-wire mode, the appropriate channel of interest must be closed, and the state of Channel 96 must be defined. See Table 3-1 1260-35 Channel Closure for an explanation of the state of Channel 96.

3.1.3 The one-wire mode is not supported by software, although scanning in the one-wire mode can be accomplished by utilizing non-vol memory locations. To execute a one-wire mode, the appropriate channel of interest must be closed, and the state of Channel 96 must be defined. See Table 3-1 1260-35 Channel Closure for an explanation of the state of Channel 96.

Table 3-1, 1260-35 Channel Closure

Channel interconnect for 1, 2 and 4-wire modes.

1-wire mode:

<channel>	<channel> output	<channel> input
(channel 96 open)		
0 thru 95	always J202- B2	(see 2-wire mode channels 0-95 input pins b-side of channel)
(channel 96 closed)		
0 thru 95	always J202- B2	(see 2-wire mode channels 0-95 input pins a-side of channel)

Thus, a one 1 x 191 1-wire mode is acheived.

2-wire mode:

<channel>	<channel> output pins a (HI) / b (LO)	to	<channel> input pins a (HI) / b (LO)
0	J200- A30 / B30		J200- A29 / B29
1	J200- A30 / B30		J200- A28 / B28
2	J200- A30 / B30		J200- A27 / B27
3	J200- A30 / B30		J200- A26 / B26
4	J200- A30 / B30		J200- A25 / B25
5	J200- A30 / B30		J200- A24 / B24
6	J200- A23 / B23		J200- A22 / B22
7	J200- A23 / B23		J200- A21 / B21
8	J200- A23 / B23		J200- A20 / B20
9	J200- A23 / B23		J200- A19 / B19
10	J200- A23 / B23		J200- A18 / B18
11	J200- A23 / B23		J200- A17 / B17
12	J200- A16 / B16		J200- A15 / B15
13	J200- A16 / B16		J200- A14 / B14
14	J200- A16 / B16		J200- A13 / B13
15	J200- A16 / B16		J200- A12 / B12
16	J200- A16 / B16		J200- A11 / B11
17	J200- A16 / B16		J200- A10 / B10
18	J200- A9 / B9		J200- A8 / B8
19	J200- A9 / B9		J200- A7 / B7
20	J200- A9 / B9		J200- A6 / B6
21	J200- A9 / B9		J200- A5 / B5
22	J200- A9 / B9		J200- A4 / B4
23	J200- A9 / B9		J200- A3 / B3
24	J202- A30 / B30		J202- A29 / B29
25	J202- A30 / B30		J202- A28 / B28
26	J202- A30 / B30		J202- A27 / B27
27	J202- A30 / B30		J202- A26 / B26
28	J202- A30 / B30		J202- A25 / B25
29	J202- A30 / B30		J202- A24 / B24

Table 3-1. 1260-35 Channel Closure (continued)

30	J202- A23 / B23	J202- A22 / B22
31	J202- A23 / B23	J202- A21 / B21
32	J202- A23 / B23	J202- A20 / B20
33	J202- A23 / B23	J202- A19 / B19
34	J202- A23 / B23	J202- A18 / B18
35	J202- A23 / B23	J202- A17 / B17
36	J202- A16 / B16	J202- A15 / B15
37	J202- A16 / B16	J202- A14 / B14
38	J202- A16 / B16	J202- A13 / B13
39	J202- A16 / B16	J202- A12 / B12
40	J202- A16 / B16	J202- A11 / B11
41	J202- A16 / B16	J202- A10 / B10
42	J202- A9 / B9	J202- A8 B8
43	J202- A9 / B9	J202- A7 / B7
44	J202- A9 / B9	J202- A6 B6
45	J202- A9 / B9	J202- A5 / B5
46	J202- A9 / B9	J202- A4 / B4
47	J202- A9 / B9	J202- A3 B3
48	J201- A30 / B30	J201- A29 / B29
49	J201- A30 / B30	J201- A28 / B28
50	J201- A30 / B30	J201- A27 / B27
51	J201- A30 / B30	J201- A26 / B26
52	J201- A30 / B30	J201- A25 / B25
53	J201- A30 / B30	J201- A24 / B24
54	J201- A23 / B23	J201- A22 / B22
55	J201- A23 / B23	J201- A21 / B21
56	J201- A23 / B23	J201- A20 / B20
57	J201- A23 / B23	J201- A19 / B19
58	J201- A23 / B23	J201- A18 / B18
59	J201- A23 / B23	J201- A17 / B17
60	J201- A16 / B16	J201- A15 / B15
61	J201- A16 / B16	J201- A14 B14
62	J201- A16 / B16	J201- A13 B13
63	J201- A16 / B16	J201- A12 B12
64	J201- A16 / B16	J201- A11 B11
65	J201- A16 / B16	J201- A10 B10
66	J201- A9 / B9	J201- A8 B8
67	J201- A9 / B9	J201- A7. B7
68	J201- A9 / B9	J201- A6 B6
69	J201- A9 / B9	J201- A5 B5
70	J201- A9 / B9	J201- A4 B4
71	J201- A9 / B9	J201- A3 B3
72	J203- A30 / B30	J203- A29 B29
73	J203- A30 / B30	J203- A28 B28
74	J203- A30 / B30	J203- A27 B27
75	J203- A30 / B30	J203- A26 B26
76	J203- A30 / B30	J203- A25 B25
77	J203- A30 / B30	J203- A24 B24

Table 3-1, 1260-35 Channel Closure (continued)

78	J203- A23 / B23	J203- A22 / B22
79	J203- A23 / B23	J203- A21 / B21
80	J203- A23 / B23	J203- A20 / B20
81	J203- A23 / B23	J203- A19 / B19
82	J203- A23 / B23	J203- A18 / B18
83	J203- A23 / B23	J203- A17 / B17
84	J203- A16 / B16	J203- A15 / B15
85	J203- A16 / B16	J203- A14 / B14
86	J203- A16 / B16	J203- A13 / B13
87	J203- A16 / B16	J203- A12 / B12
88	J203- A16 / B16	J203- A11 / B11
89	J203- A16 / B16	J203- A10 / B10
90	J203- A9 / B9	J203- A8 / B8
91	J203- A9 / B9	J203- A7 / B7
92	J203- A9 / B9	J203- A6 / B6
93	J203- A9 / B9	J203- A5 / B5
94	J203- A9 / B9	J203- A4 / B4
95	J203- A9 / B9	J203- A3 / B3

96 (not used in 2-wire mode)

4-wire mode:

<channel>	refer to the following 2-wire channels for the input/output pins	<channel>	refer to the following 2-wire channels for the input/output pins
0	0,48	24	24,72
1	1,49	25	25,73
2	2,50	26	26,74
3	3,51	27	27,75
4	4,52	28	28,76
5	5,53	29	29,77
6	6,54	30	30,78
7	7,55	31	31,79
8	8,56	32	32,80
9	9,57	33	33,81
10	10,58	34	34,82
11	11,59	35	35,83
12	12,60	36	36,84
13	13,61	37	37,85
14	14,62	38	38,86
15	15,63	39	39,87
16	16,64	40	40,88
17	17,65	41	41,89
18	18,66	42	42,90
19	19,67	43	43,91
20	20,68	44	44,92
21	21,69	45	45,93
22	22,70	46	46,94
23	23,71	47	47,95

96 (not used in 4-wire mode)

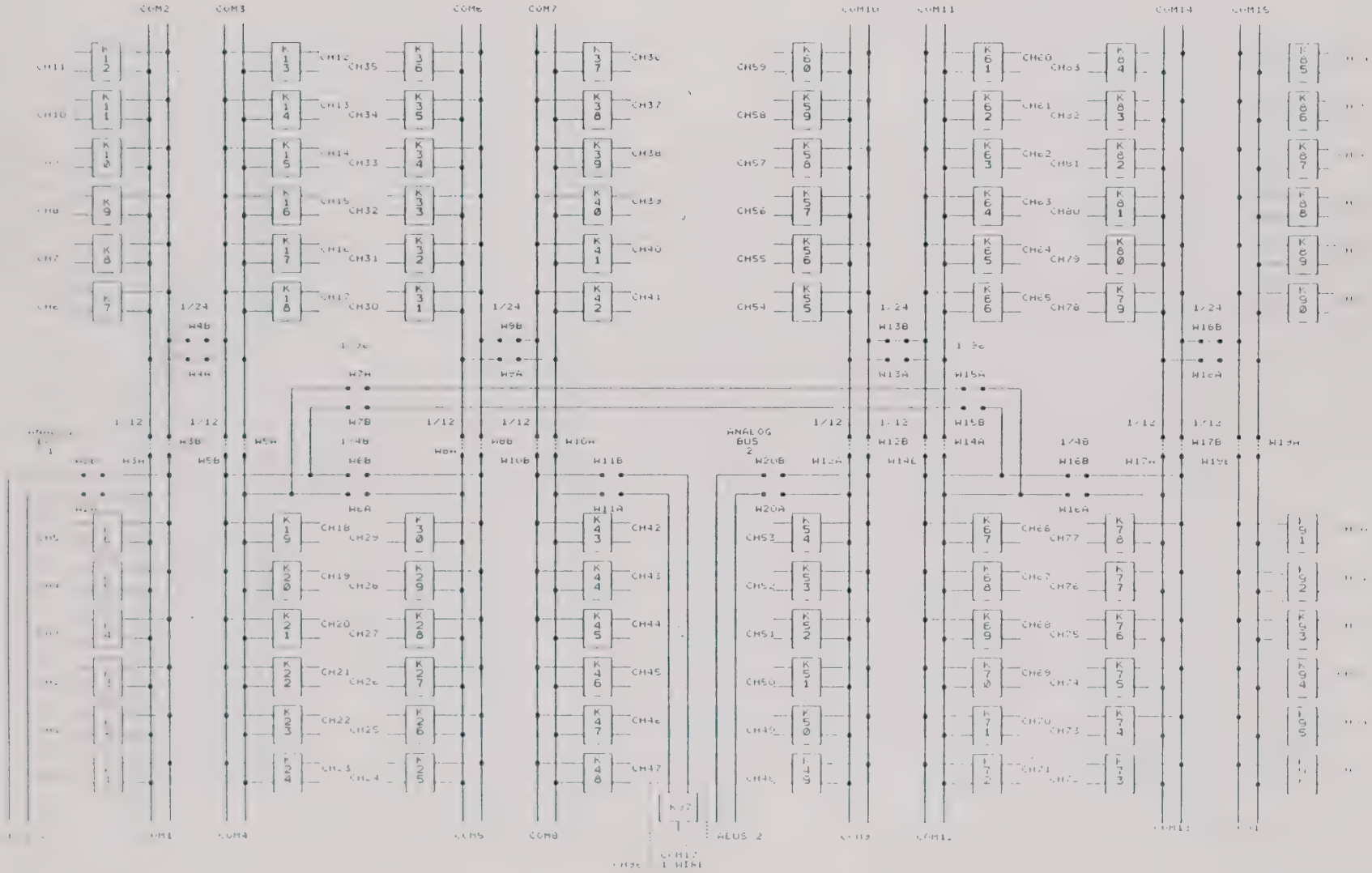

Figure 3-1, 1260-35 Block Diagram

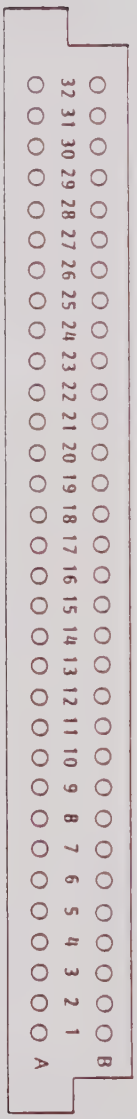

Figure 3-2, 1260-35 Pin Connections

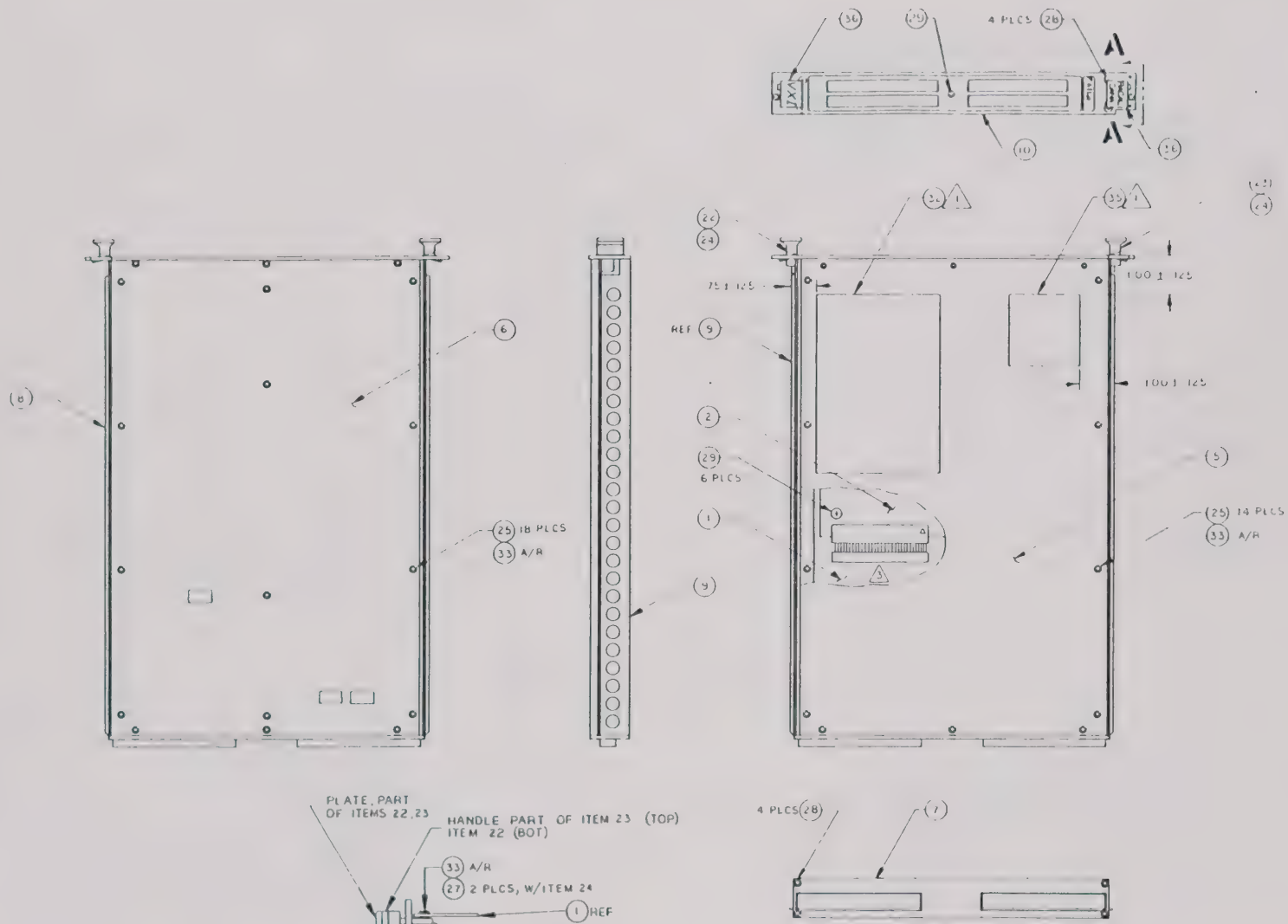

DETAIL A
SCALE NONE

TOP PANEL, ITEM 8 NOT SHOWN
SIDE PANELS, ITEMS 5 & 6 NOT SHOWN

1. CONNECT CABLE FROM ITEM 1 TO ITEM 2 AS SHOWN
2. INCLUDE ITEM 38 (SHIPPING KIT) IN BOX WITH ASSY
3. LOCATE LABELS WHERE SHOWN
4. [illegible] UNLESS OTHERWISE SPECIFIED

PROPRIETARY NOTICE
THIS DOCUMENT AND THE TECHNICAL DATA HEREON DISCLOSED ARE PROPRIETARY TO RACAL DANA INSTRUMENTS INC AND SHALL NOT WITHOUT EXPRESS WRITTEN PERMISSION OF RACAL DANA INSTRUMENTS INC BE USED, RELEASED OR DISCLOSED IN WHOLE OR IN PART OR USED TO SOLICIT QUOTATIONS FROM A COMPETITIVE SOURCE OR USED FOR MANUFACTURE BY ANYONE OTHER THAN RACAL DANA INSTRUMENTS INC. THE INFORMATION HEREON HAS BEEN DEVELOPED AT PRIVATE EXPENSE AND MAY ONLY BE USED FOR PURPOSES OF ENGINEERING EVALUATION AND FOR INCORPORATION INTO TECHNICAL SPECIFICATIONS AND OTHER DOCUMENTS WHICH SPECIFY FOR A CHANGE OR PROCUREMENT FROM RACAL DANA INSTRUMENTS INC.

RACAL-DANA Instruments Inc.
4 GOODYEAR, IRVINE CALIFORNIA 92714

DOCUMENT TITLE: FINAL ASSY, 1260

SIZE	CODE IDENT NO	DOCUMENT NO	REV
D	21793	401-11	E

SCALE | SHEET

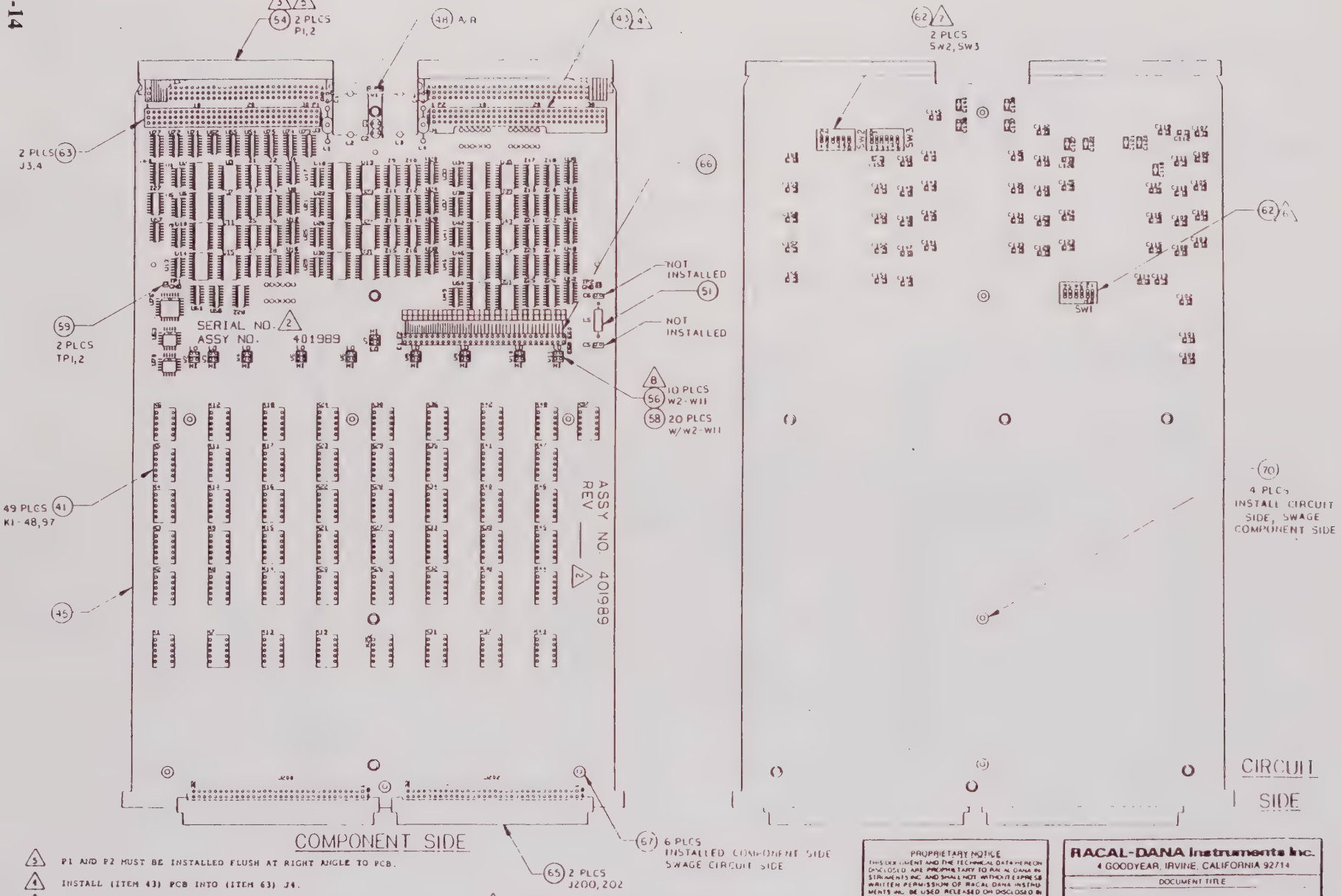

3. P1 AND P2 MUST BE INSTALLED FLUSH AT RIGHT ANGLE TO PCB.
4. INSTALL (ITEM 43) PCB INTO (ITEM 63) J4.
5. SOLDER TAILS ON CIRCUIT SIDE OF PCB FOR P1, P2 (ITEM 54) TO BE TRIMMED TO A MAX. HEIGHT OF .060.
2. INK STAMP SERIAL NUMBER, ASSY NUMBER & CURRENT REVISION ON COMPONENT SIDE APPROX. WHERE SHOWN.

1. REFERENCE SCHEMATIC 431989.

NOTES UNLESS OTHERWISE SPECIFIED

8. INSTALL PLUG-JUMPER (ITEM 58) ONTO W2-W11 (ITEM 56) AS SHOWN
7. SET SW2 & SW3 (ITEM 62) TO ON POSITION. DO NOT WAVE SOLDER.
6. SET SW1 (ITEM 62) TO LOGICAL ADDRESS 1 PER TABLE 1 ALSO SET SW1 POSITION 5 TO ON. DO NOT WAVE SOLDER

PROPRIETARY NOTICE
THIS DOCUMENT AND THE TECHNICAL DATA HEREON DISCLOSED ARE PROPRIETARY TO RACAL DANA INSTRUMENTS INC. AND SHALL NOT WITHOUT EXPRESS WRITTEN PERMISSION OF RACAL DANA INSTRUMENTS INC. BE USED RELEASED OR DISCLOSED IN WHOLE OR IN PART OR USED TO SOLICIT QUOTATIONS FROM A COMPETITIVE SOURCE OR USED FOR MANUFACTURE BY ANYONE OTHER THAN RACAL DANA INSTRUMENTS INC. THE INFORMATION HEREON HAS BEEN DEVELOPED AT PRIVATE EXPENSE AND MAY ONLY BE USED FOR PURPOSES OF ENGINEERING EVALUATION AND FOR INCORPORATION INTO TECHNICAL SPECIFICATIONS AND OTHER DOCUMENTS WHICH SPECIFY PROCUREMENT OF PRODUCTS FROM RACAL DANA INSTRUMENTS INC.

RACAL-DANA Instruments Inc.
4 GOODYEAR, IRVINE, CALIFORNIA 92714

DOCUMENT TITLE: PCB ASSY, 1260-35

SIZE	CODE IDENT NO	DOCUMENT NO	REV
D	21793	401989	A

SCALE — SHEET 1 OF 4

REF. DES.	IC TYPE	+5V PIN NO	GND PIN NO.
U76	231154 (22V10H)	28	14
U75	26LS31	16	8
U73, 74	26LS32	16	8
U71, 72, 77	74HCT253	16	8
U70	231152-001 (16L8Q)	20	10
U57	LM339	3	12
U56	74HCT85	16	8
U54, 55	74LS138	16	8
U53	231153 (16R4)	20	10
U4, 8, 12, 16, 20, 24, 28 U32, 36, 40, 44, 48, 52, 60	74HCT166	16	8
U3, 7, 11, 15, 19, 23, U27, 31, 35, 39, 43, 47, 51	2803	NC	9
U2, 6, 10, 14, 18, 22, U26, 30, 34, 38, 42, 46, 50	74HCT273	20	10
U1, 5, 9, 13, 17, 21, 25, 29 U33, 37, 41, 45, 49, 61, 62	74HCT164	14	7

IC POWER AND GROUND CONNECTIONS

HIGHEST REF. DES
Z28
W11
U77
TP2
SW3
P2
L5
K97
J202
E60
C160

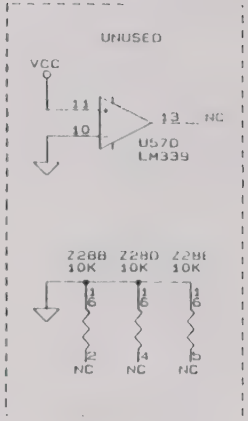

4. C5 AND C6 ARE NOT INSTALLED.

3. RELAYS K1 THRU K48,K97 ARE RACAL-DANA P/N 310197. ALL RELAYS SHOWN IN DE-ENERGIZED POSITION

2. RESISTOR NETWORKS ARE IN OHMS

1. CAPACITOR VALUES ARE IN MICROFARADS, 50V, +/- 20% UNLESS OTHERWISE SPECIFIED

NOTES UNLESS OTHERWISE SPECIFIED

PROPRIETARY NOTICE

THIS DOCUMENT AND THE TECHNICAL DATA HEREON DISCLOSED ARE PROPRIETARY TO RACAL DANA INSTRUMENTS INC. AND SHALL NOT, WITHOUT EXPRESS WRITTEN PERMISSION OF RACAL DANA INSTRUMENTS INC. BE USED, RELEASED OR DISCLOSED IN WHOLE OR IN PART, OR USED TO SOLICIT QUOTATIONS FROM A COMPETITIVE SOURCE OR USED FOR MANUFACTURE BY ANYONE OTHER THAN RACAL DANA INSTRUMENTS INC. THE INFORMATION HEREON HAS BEEN DEVELOPED AT PRIVATE EXPENSE AND MAY ONLY BE USED FOR PURPOSES OF ENGINEERING EVALUATION AND FOR INCORPORATION INTO TECHNICAL SPECIFICATIONS AND OTHER DOCUMENTS WHICH SPECIFY PROCUREMENT OF PRODUCTS FROM RACAL DANA INSTRUMENTS INC.

RACAL-DANA Instruments Inc.
4 GOODYEAR, IRVINE, CALIFORNIA 92714

DOCUMENT TITLE: SCHEM, 1260-35

SIZE	CODE IDENT NO	DOCUMENT NO	REV
B	21793	431989	A

SCALE | SHEET 1 OF 17

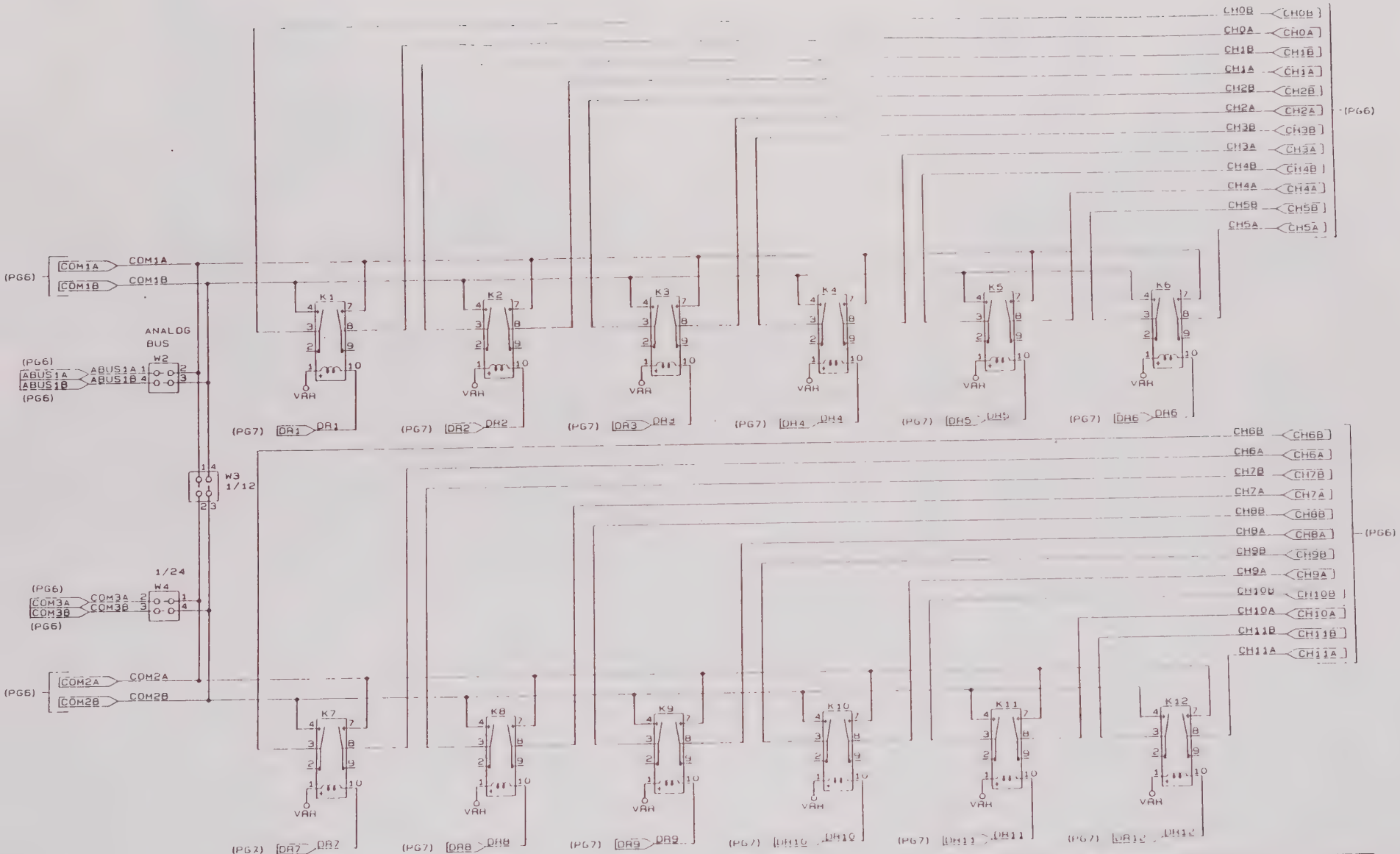

SIZE	CODE IDENT NO	DOCUMENT NO	REV
B	21793	1319189	A
SCALE		SHEET 1 OF 1	

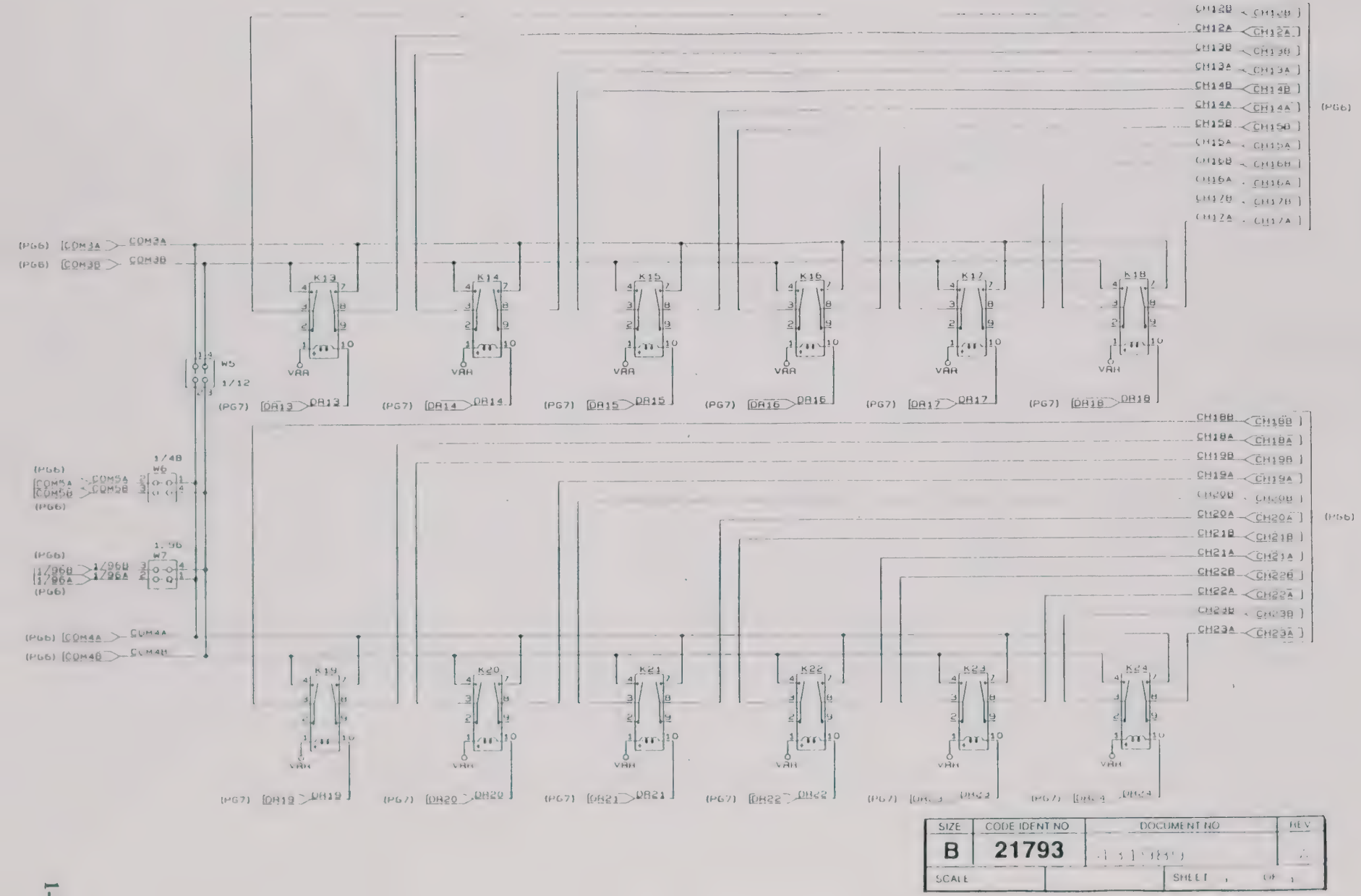

SIZE	CODE IDENT NO	DOCUMENT NO	REV
B	21793		
SCALE		SHEET	

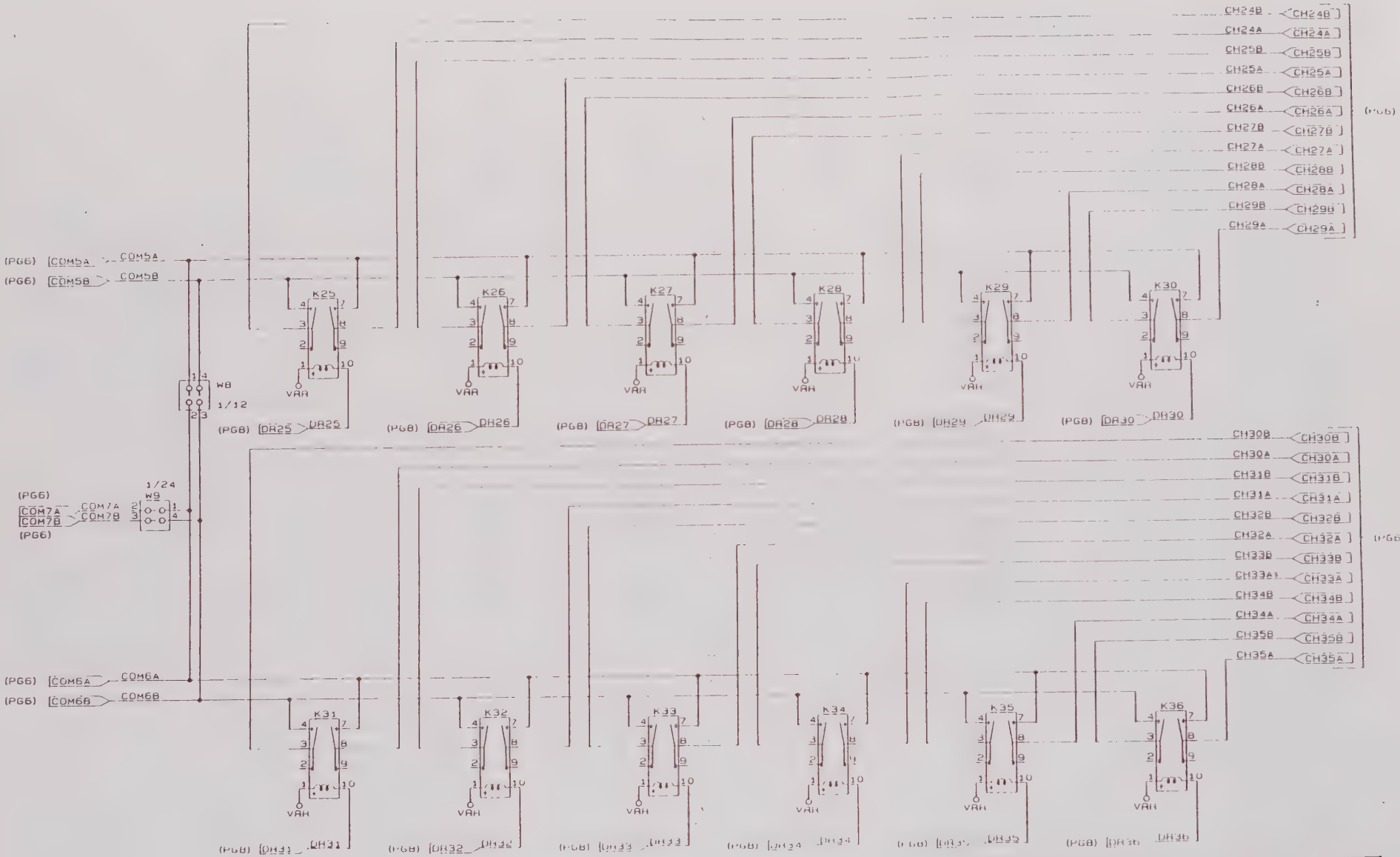

SIZE	CODE IDENT NO	DOCUMENT NO	REV
B	21793	[illegible]	[illegible]
SCALE		SHEET 4	OF 17

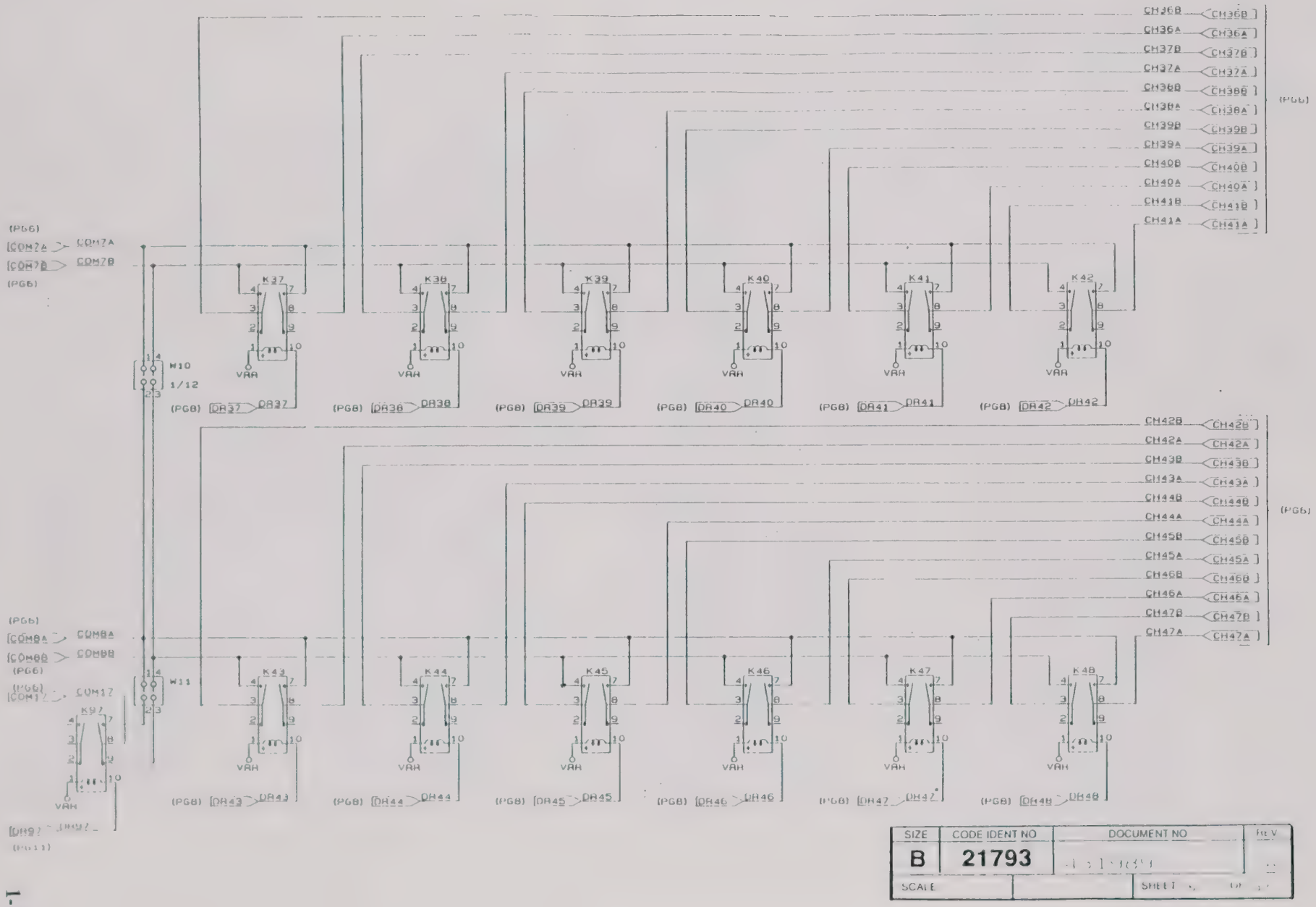

SIZE	CODE IDENT NO	DOCUMENT NO	REV
B	21793		
SCALE		SHEET	

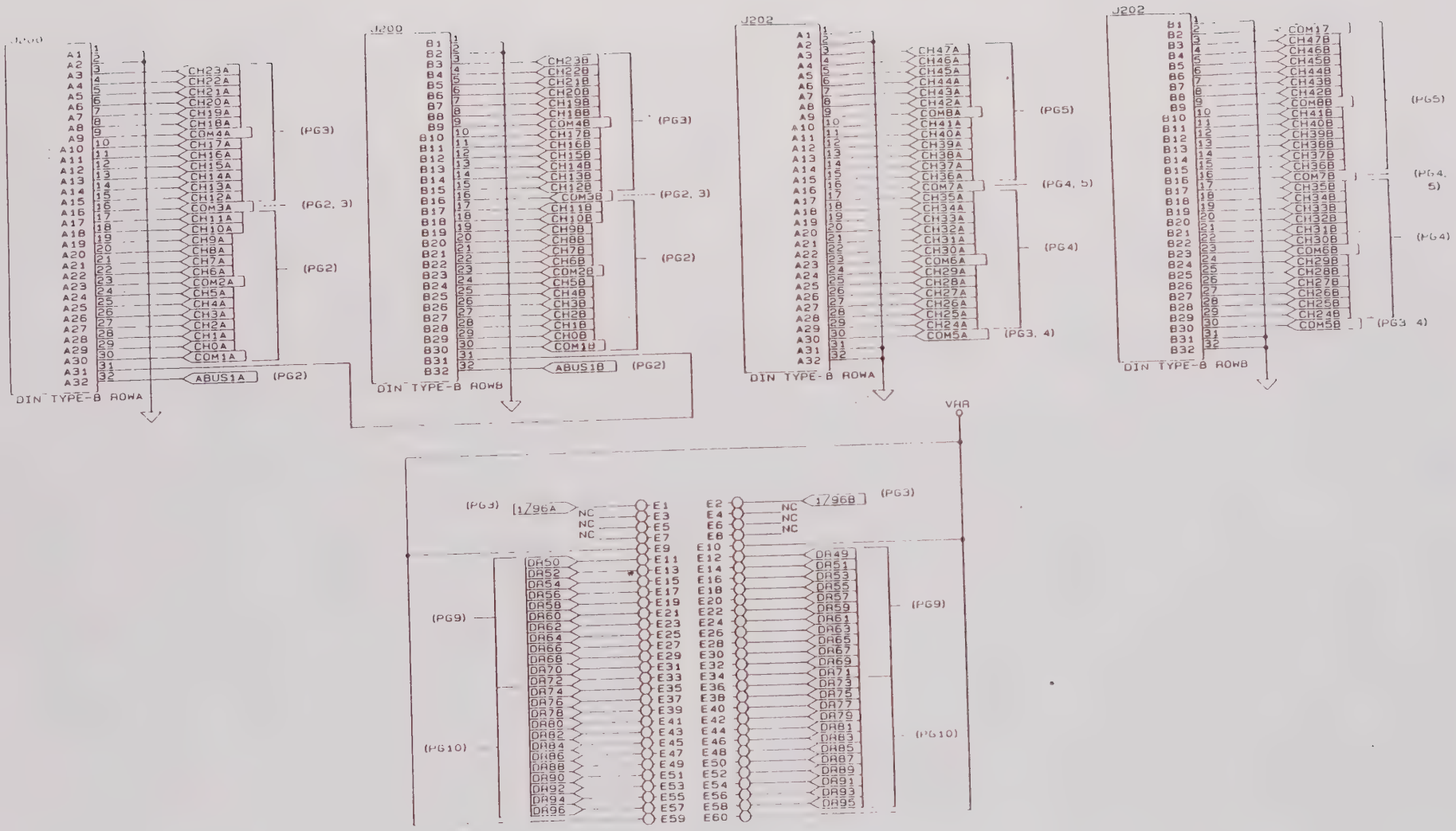

SIZE	CODE IDENT NO	DOCUMENT NO	REV
B	21793	1319889	
SCALE		SHEET 6 OF 17	

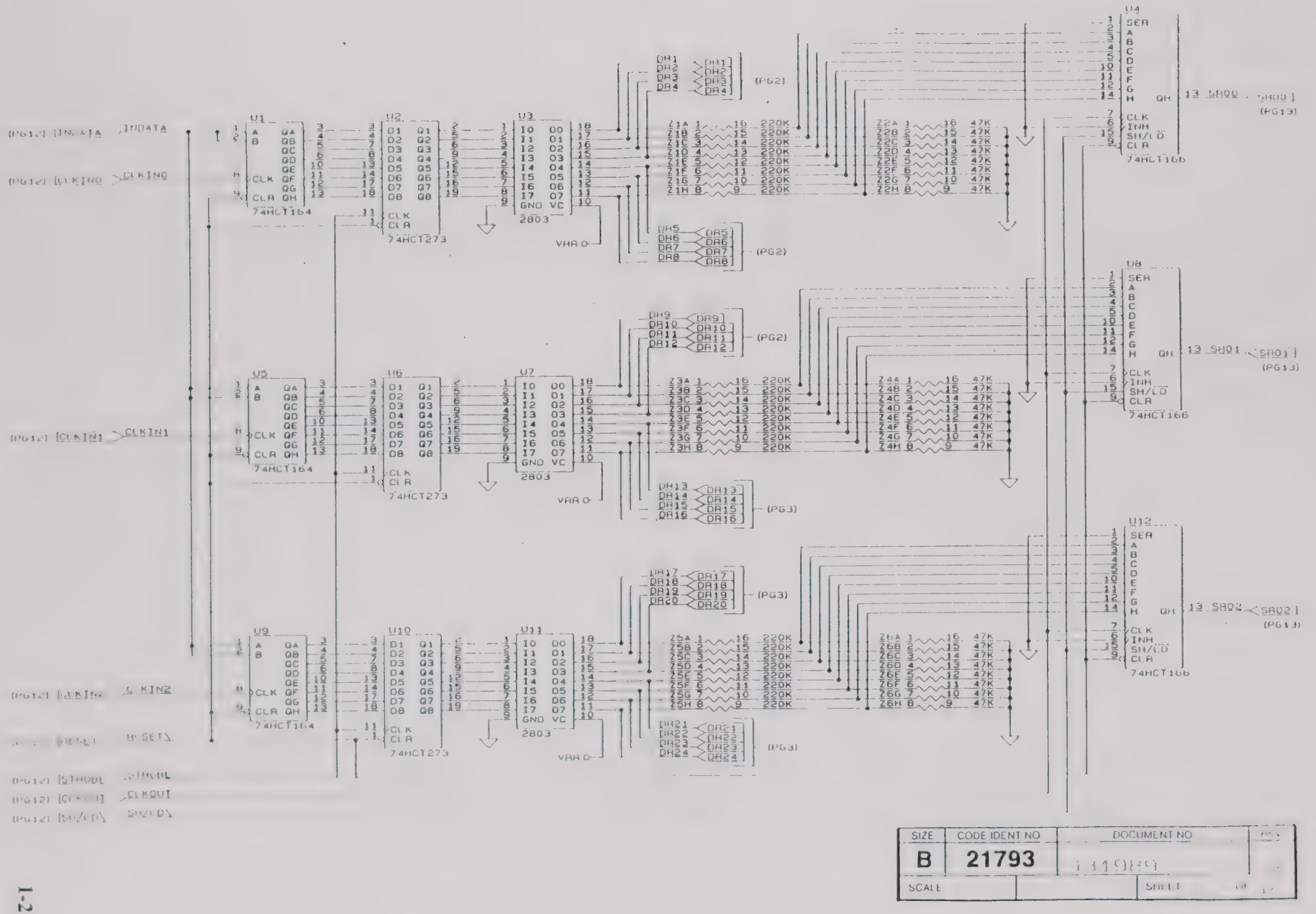

SIZE	CODE IDENT NO	DOCUMENT NO	REV
B	21793	1319[illegible]	
SCALE		SHEET	

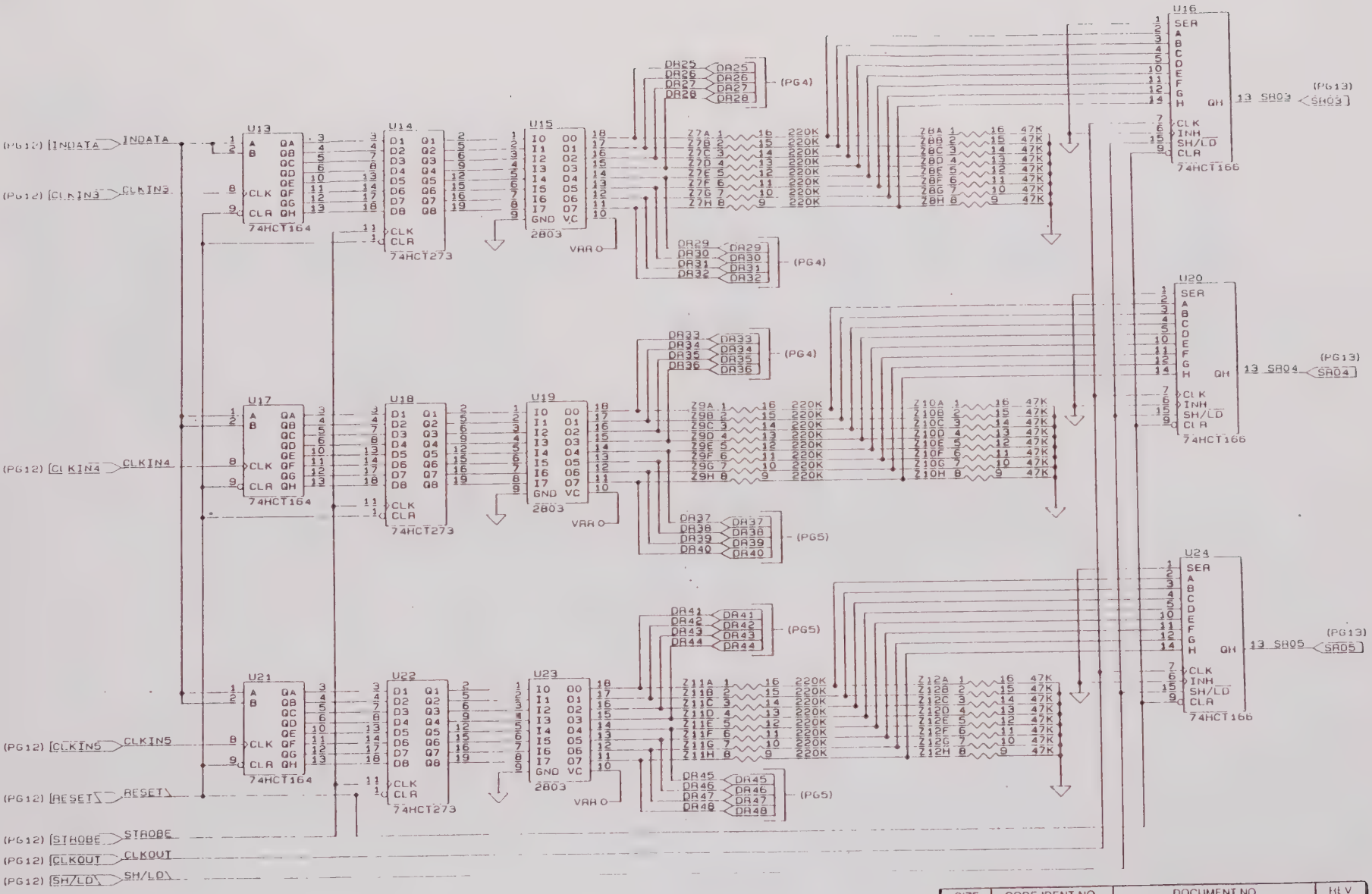

SIZE	CODE IDENT NO	DOCUMENT NO	REV
B	21793	1315939	A
SCALE		SHEET 8 OF 17	

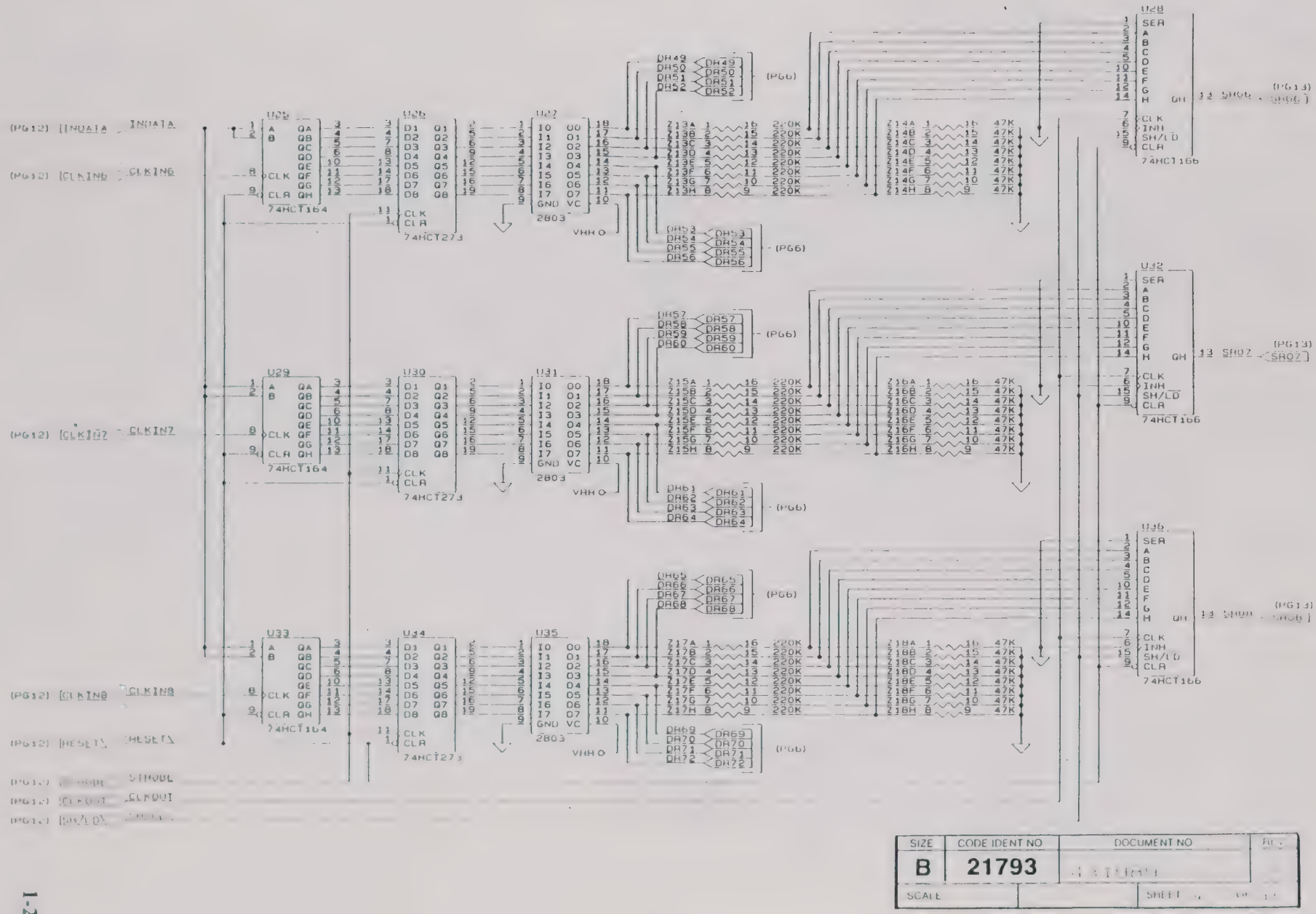

SIZE	CODE IDENT NO	DOCUMENT NO	REV
B	21793		
SCALE		SHEET	

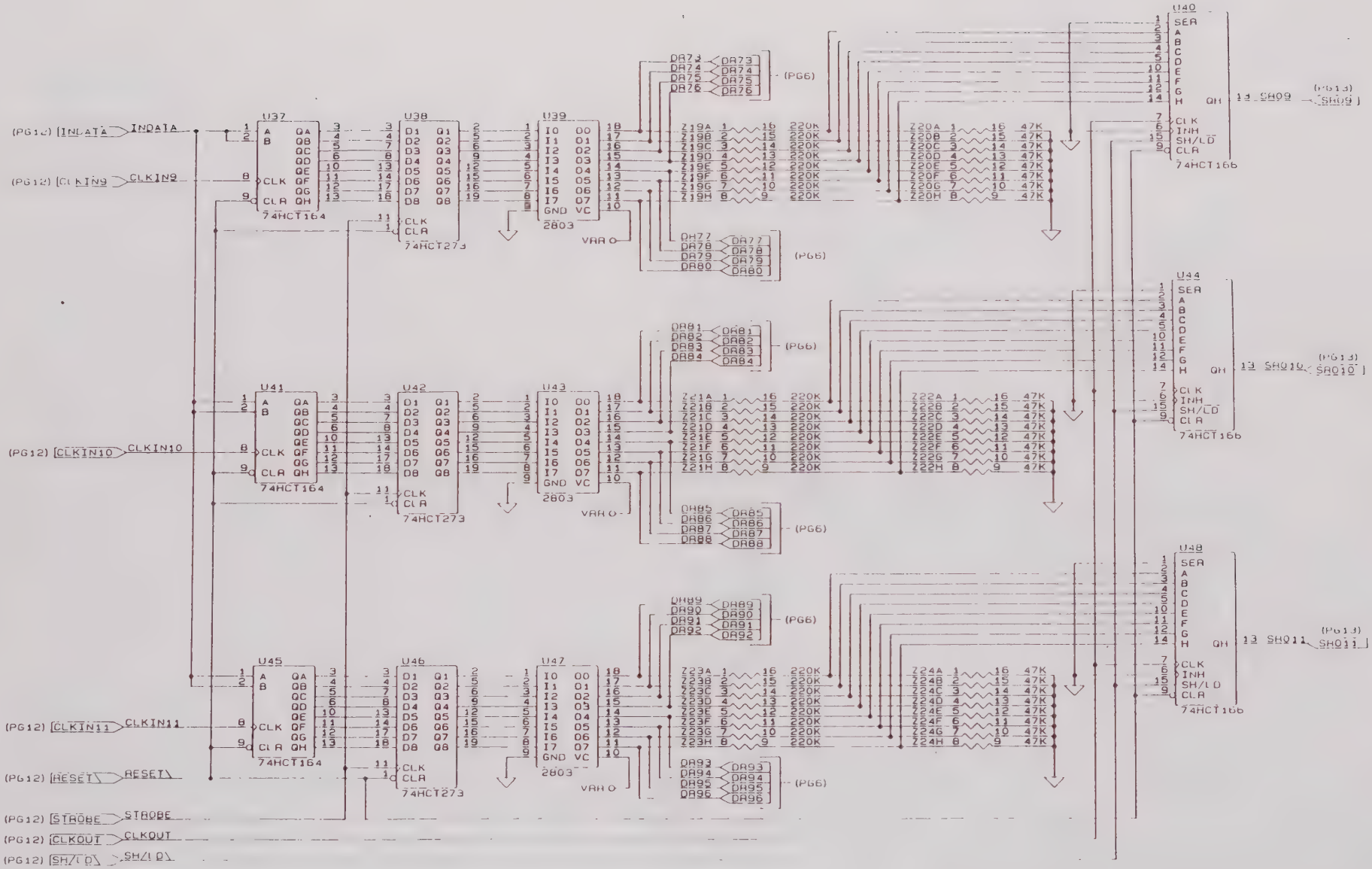

SIZE	CODE IDENT NO	DOCUMENT NO	REV
B	21793	1319B9	A
SCALE		SHEET 10 OF 17	

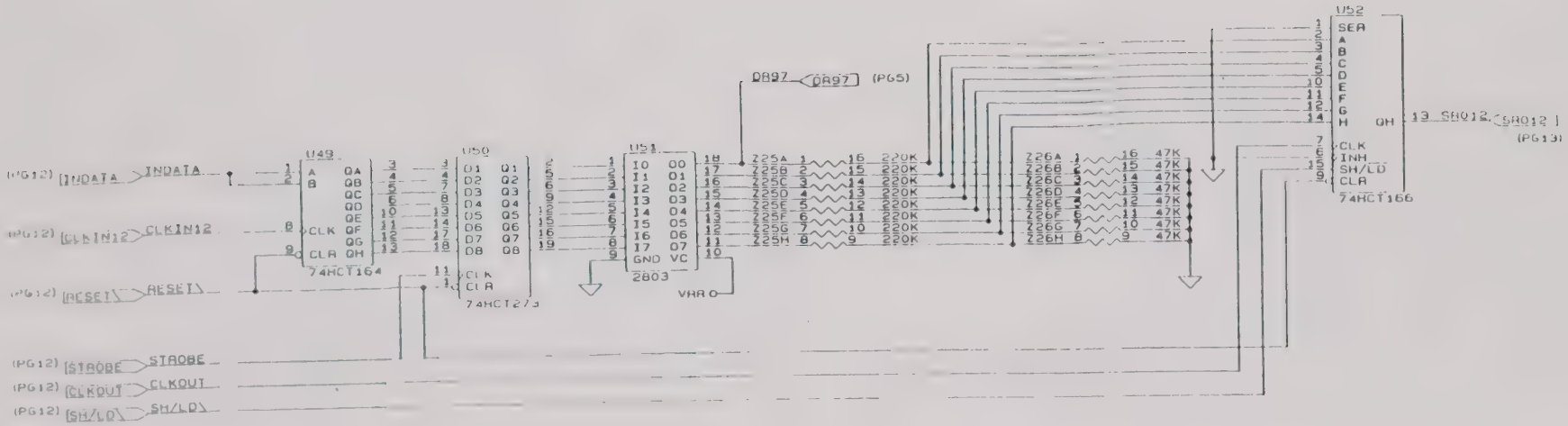

SIZE	CODE IDENT NO	DOCUMENT NO	REV
B	21793		
SCALE		SHEET	OF

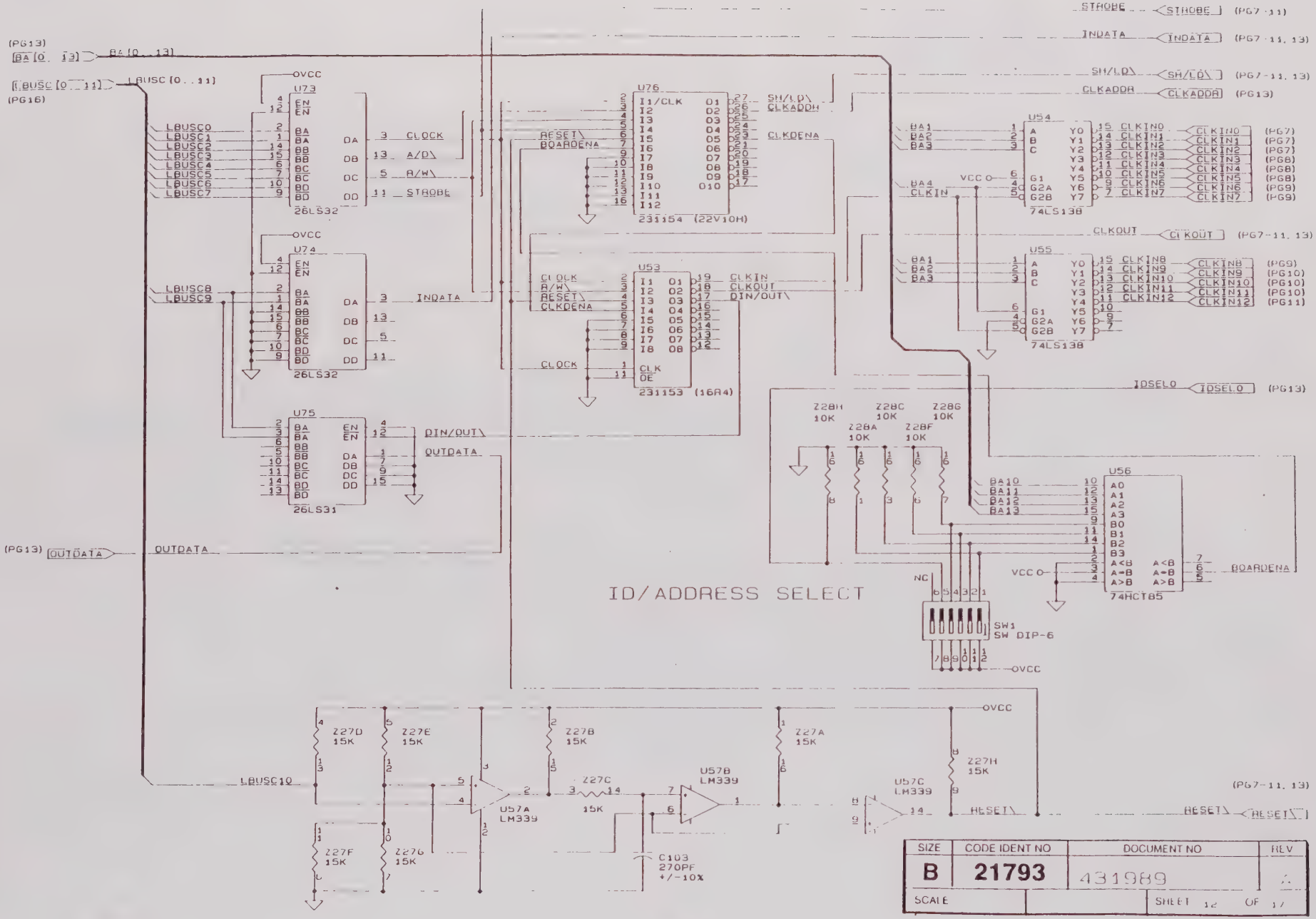
ID/ADDRESS SELECT
U73
U74
U75
U76
U53
U54
U55
U56
U57A LM339
U57B LM339
U57C LM339
26LS32
26LS31
74LS138
74HCT85
231154 (22V10H)
231153 (16R4)
SW1 SW DIP-6
STROBE
INDATA
SM/LD\
CLKADDR
CLKOUT
IDSELO
RESET\
BOARDENA
DIN/OUT\
OUTDATA
LBUSC10
C103 270PF +/-10%
SIZE
CODE IDENT NO
DOCUMENT NO
REV
B
21793
431989
SCALE
SHEET 12 OF 17

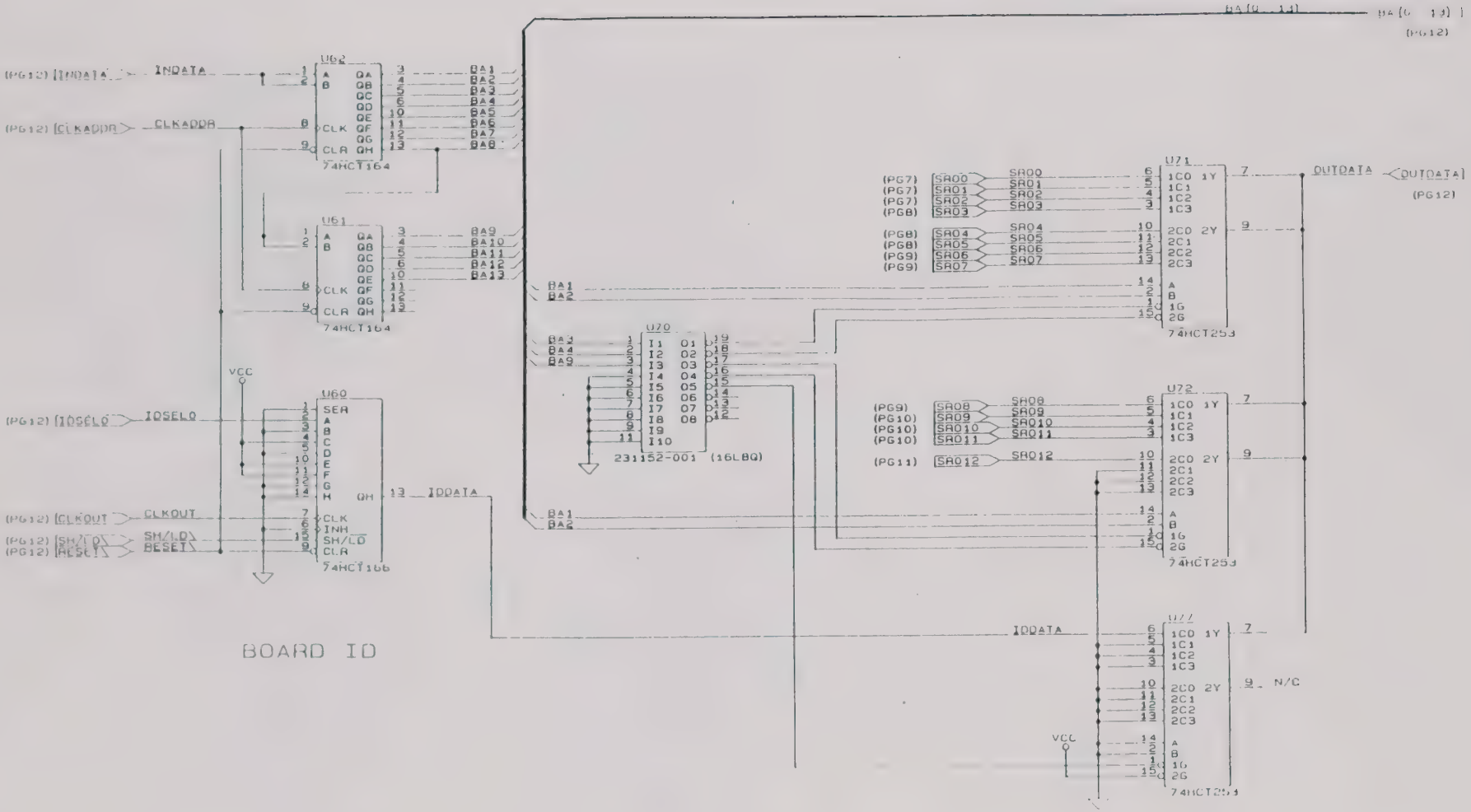

SIZE	CODE IDENT NO	DOCUMENT NO	REV
B	21793	4319889	
SCALE		SHEET 13 OF 17	

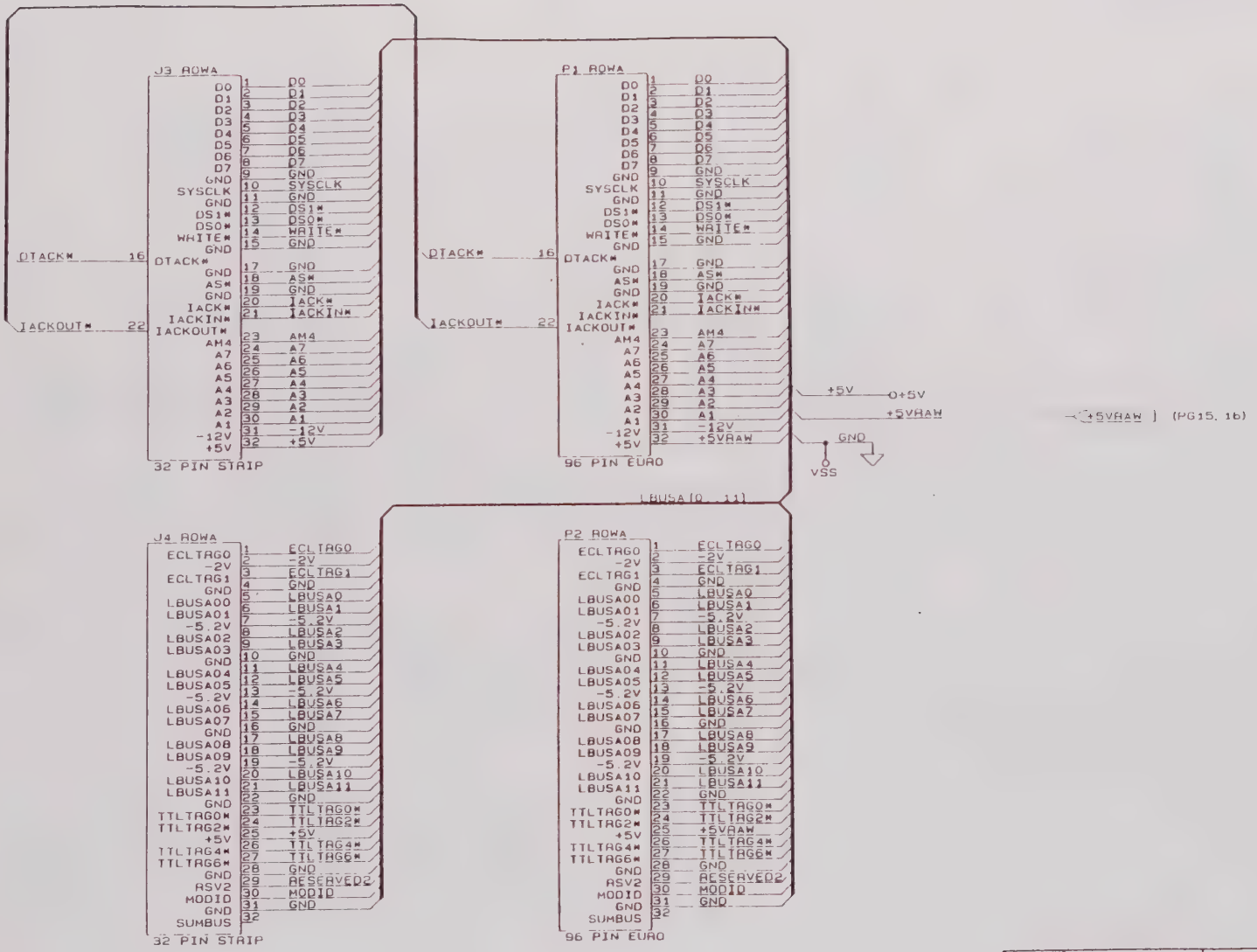

SIZE	CODE IDENT NO	DOCUMENT NO	REV
B	21793	431989	
SCALE		SHEET 14 OF 17	

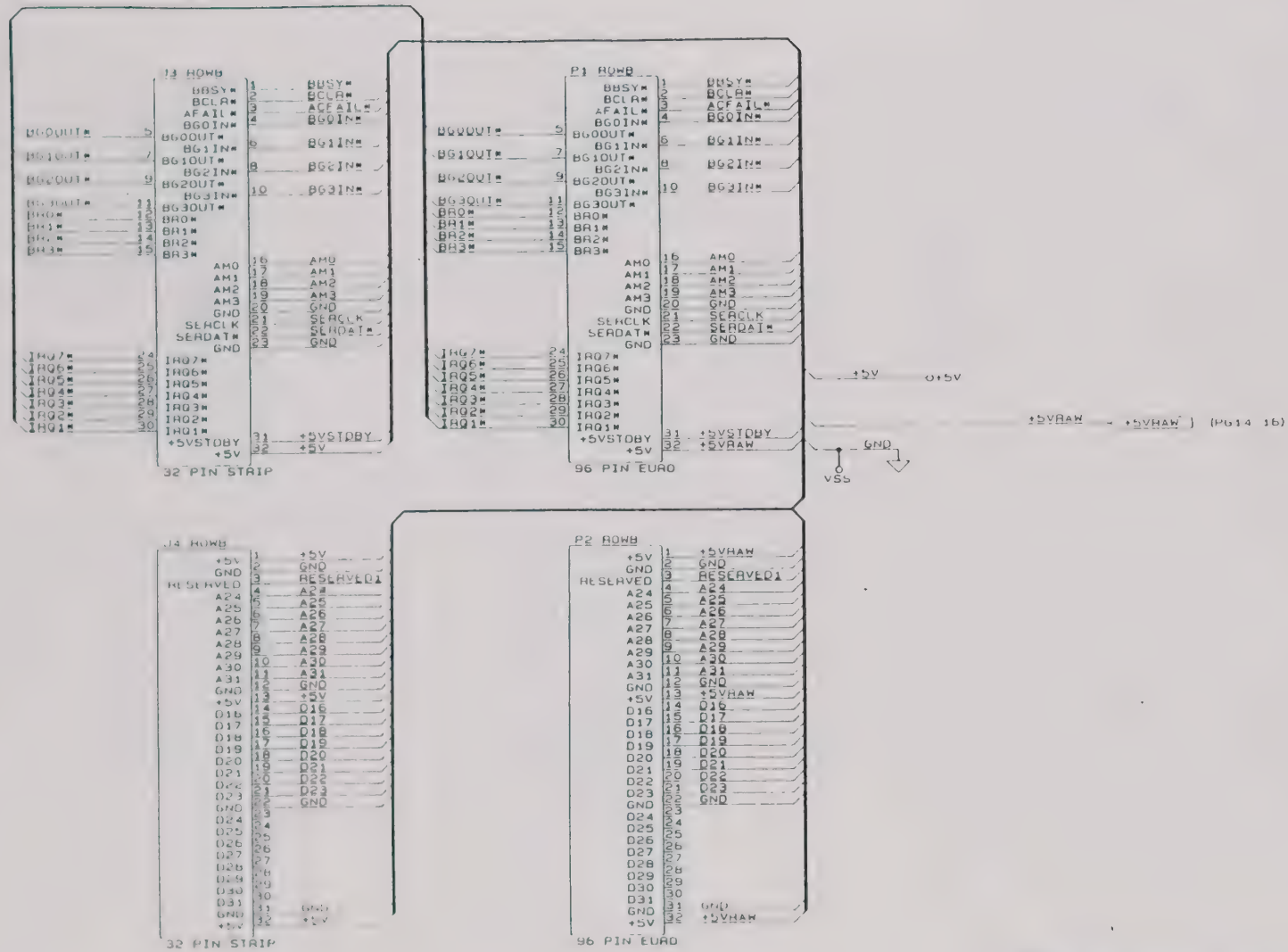

SIZE	CODE IDENT NO	DOCUMENT NO	REV
B	21793		
SCALE		SHEET	

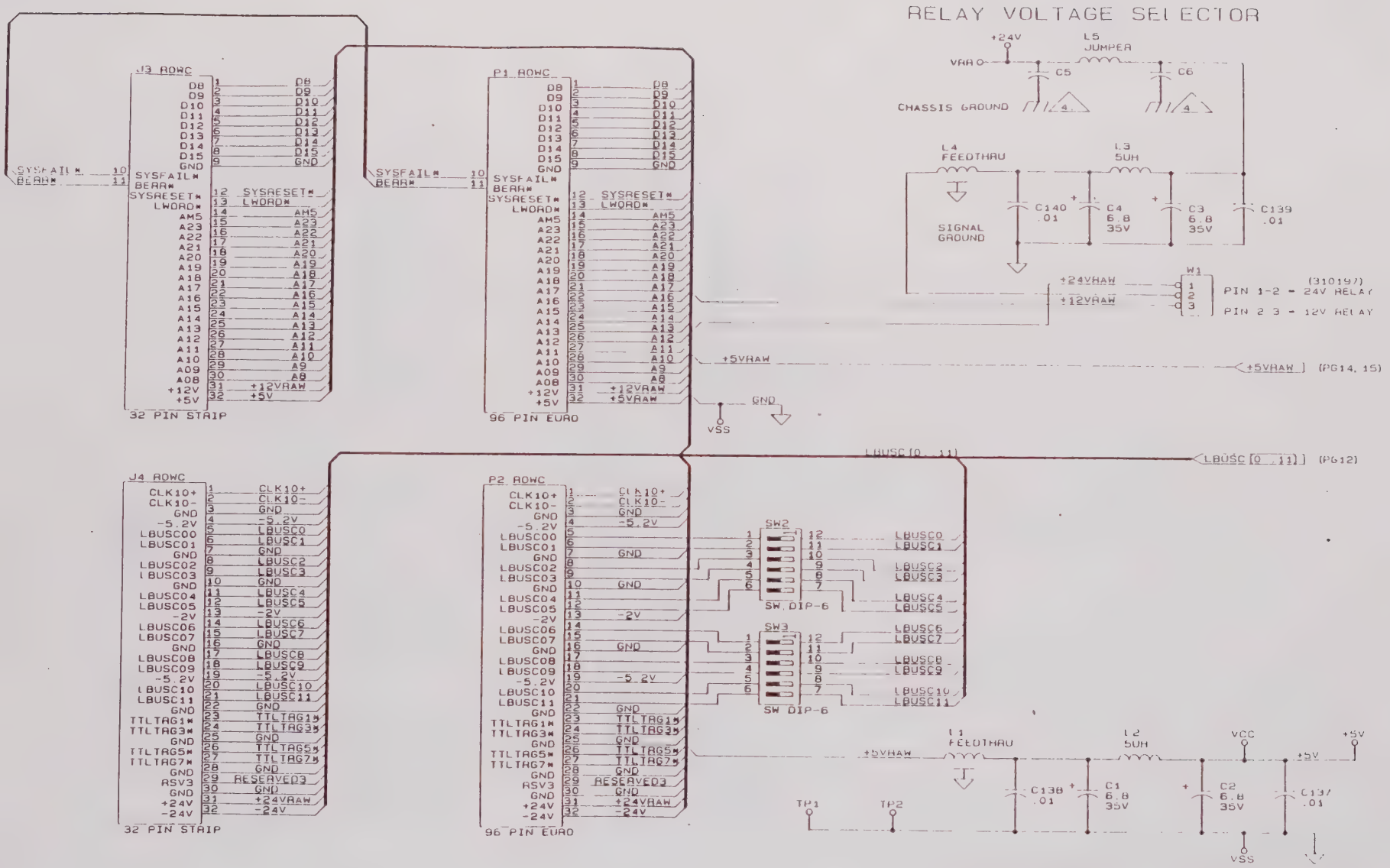

SIZE	CODE IDENT NO	DOCUMENT NO	REV
B	21793	431989	A
SCALE		SHEET 16 OF 17	

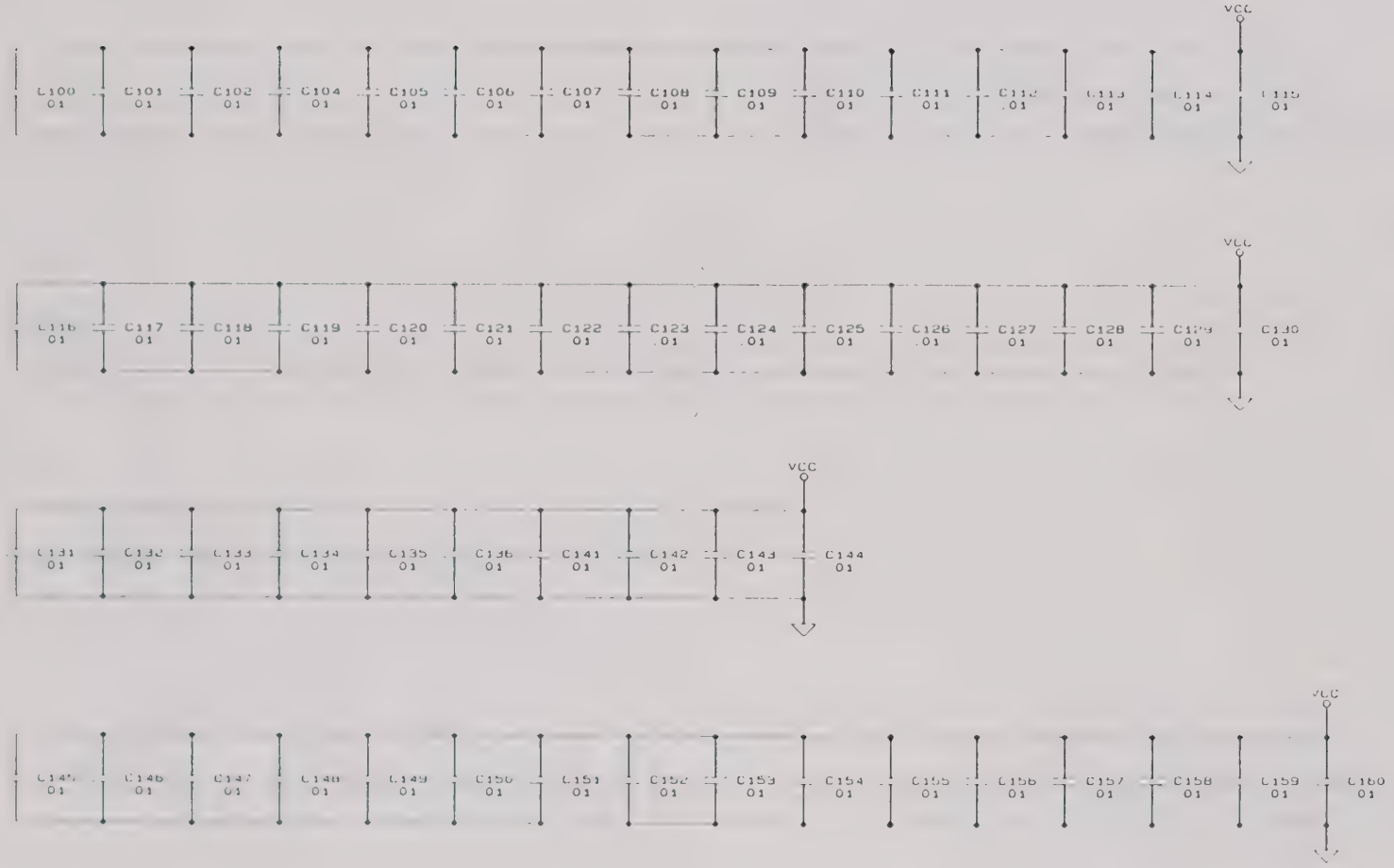

SIZE	CODE IDENT NO	DOCUMENT NO	REV
B	21793	[illegible]	[illegible]
SCALE		SHEET [illegible] OF [illegible]	

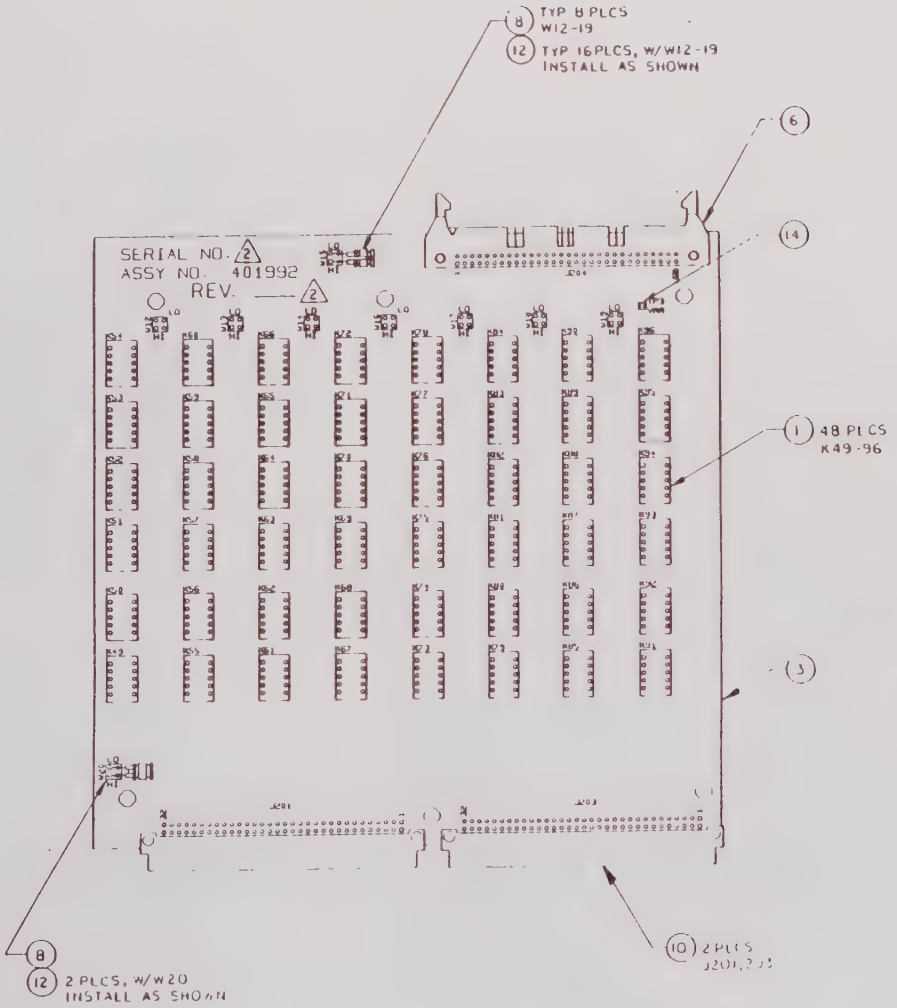

3. ALL SOLDER TAILS ON CIRCUIT SIDE OF PCB TO BE TRIMMED TO A MAX. HEIGHT OF .045.
2 INK STAMP SERIAL NUMBER, ASSY NUMBER & CURRENT REVISION ON COMPONENT SIDE IN INDICATED AREAS
1 REFERENCE SCHEMATIC 431932.

NOTES UNLESS OTHERWISE SPECIFIED

PROPRIETARY NOTICE
THIS DOCUMENT AND THE TECHNICAL DATA HEREON DISCLOSED ARE PROPRIETARY TO RACAL-DANA INSTRUMENTS INC AND SHALL NOT WITHOUT EXPRESS WRITTEN PERMISSION OF RACAL-DANA INSTRUMENTS INC BE USED, RELEASED OR DISCLOSED IN WHOLE OR IN PART, OR USED TO SOLICIT QUOTATIONS FROM A COMPETITIVE SOURCE OR USED FOR MANUFACTURE BY ANYONE OTHER THAN RACAL-DANA INSTRUMENTS INC THE INFORMATION HEREON HAS BEEN DEVELOPED AT PRIVATE EXPENSE AND MAY ONLY BE USED FOR PURPOSES OF ENGINEERING EVALUATION AND FOR INCORPORATION INTO TECHNICAL SPECIFICATIONS AND OTHER DOCUMENTS WHICH SPECIFY PROCUREMENT OF PRODUCTS FROM RACAL-DANA INSTRUMENTS INC

RACAL-DANA Instruments Inc.
4 GOODYEAR, IRVINE, CALIFORNIA 92714

DOCUMENT TITLE
PCB ASSY, 1260-35D

SIZE	CODE IDENT NO	DOCUMENT NO	REV
D	21793	401992	A

SCALE — SHEET 1 OF 2

W20
J204
K96
HIGHEST REF. DES

1 RELAYS K49 THRU K96 ARE RACAL DANA P/N 310197
ALL RELAYS SHOWN IN DE ENERGIZED POSITION

NOTES UNLESS OTHERWISE SPECIFIED

PROPRIETARY NOTICE
THIS DOCUMENT AND THE TECHNICAL DATA HEREON DISCLOSED ARE PROPRIETARY TO RACAL DANA INSTRUMENTS INC AND SHALL NOT WITHOUT EXPRESS WRITTEN PERMISSION OF RACAL DANA INSTRUMENTS INC BE USED RELEASED OR DISCLOSED IN WHOLE OR IN PART OR USED TO SOLICIT QUOTATIONS FROM A COMPETITIVE SOURCE OR USED FOR MANUFACTURE BY ANYONE OTHER THAN RACAL DANA INSTRUMENTS INC THE INFORMATION HEREON HAS BEEN DEVELOPED AT PRIVATE EXPENSE AND MAY ONLY BE USED FOR PURPOSES OF ENGINEERING EVALUATION AND FOR INCORPORATION INTO TECHNICAL SPECIFICATIONS AND OTHER DOCUMENTS WHICH SPECIFY PROCUREMENT OF PRODUCTS FROM RACAL DANA INSTRUMENTS INC

RACAL-DANA Instruments Inc.
4 GOODYEAR, IRVINE, CALIFORNIA 92714

DOCUMENT TITLE

SCHEM, 1260-35D

SIZE	CODE IDENT NO	DOCUMENT NO	REV
B	21793	431992	A

SCALE — SHEET 1 OF 6

SIZE	CODE IDENT NO	DOCUMENT NO	REV
B	21793	431992	A
SCALE		SHEET 2 OF 6	

SIZE	CODE IDENT NO	DOCUMENT NO	REV
B	21793	1319992	E
SCALE		SHEET 3 OF 4	

SIZE	CODE IDENT NO	DOCUMENT NO	REV
B	21793	431992	A
SCALE		SHEET 4 OF 6	

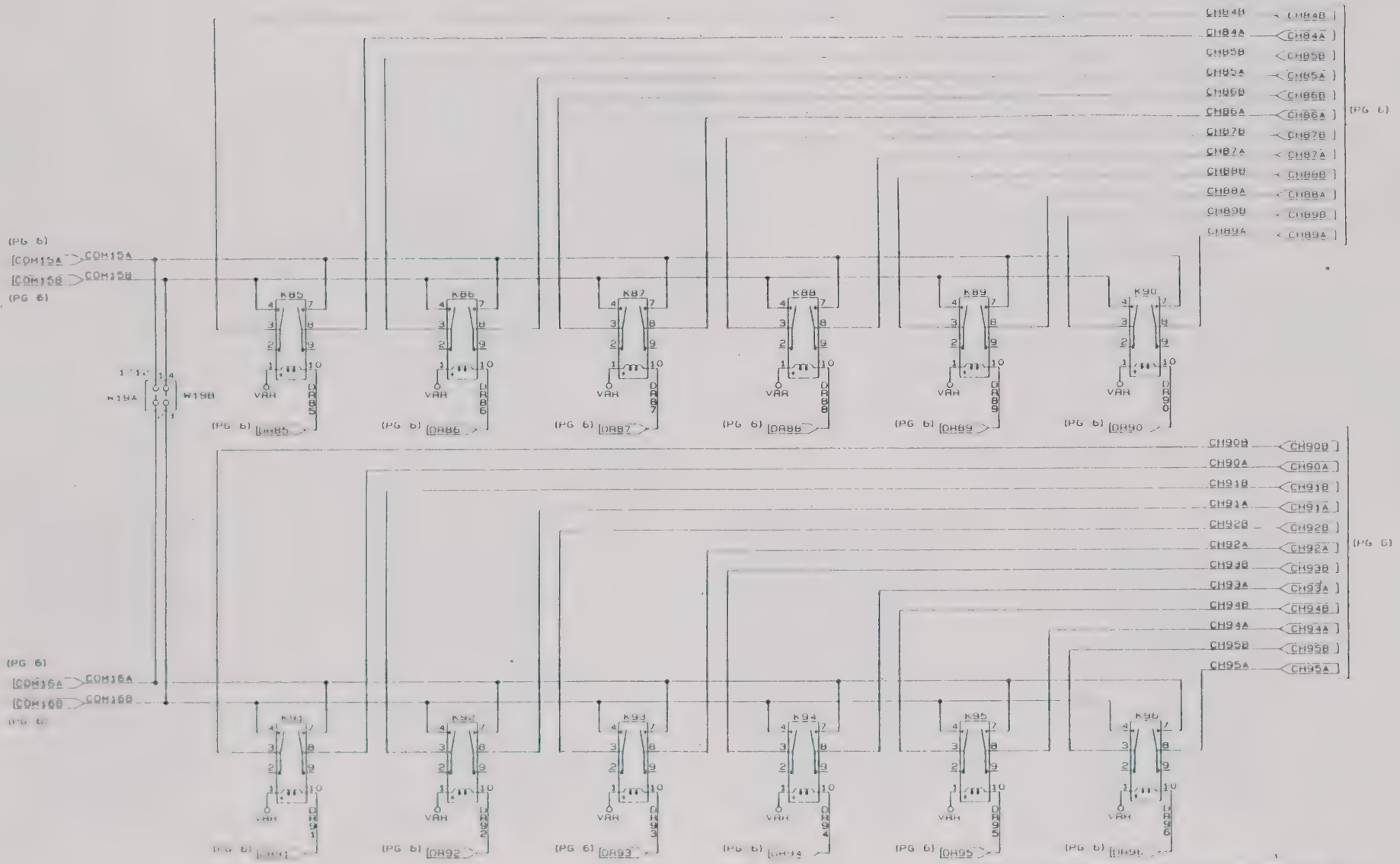

SIZE	CODE IDENT NO	DOCUMENT NO	REV
B	21793		A
SCALE		SHEET 5 OF 6	

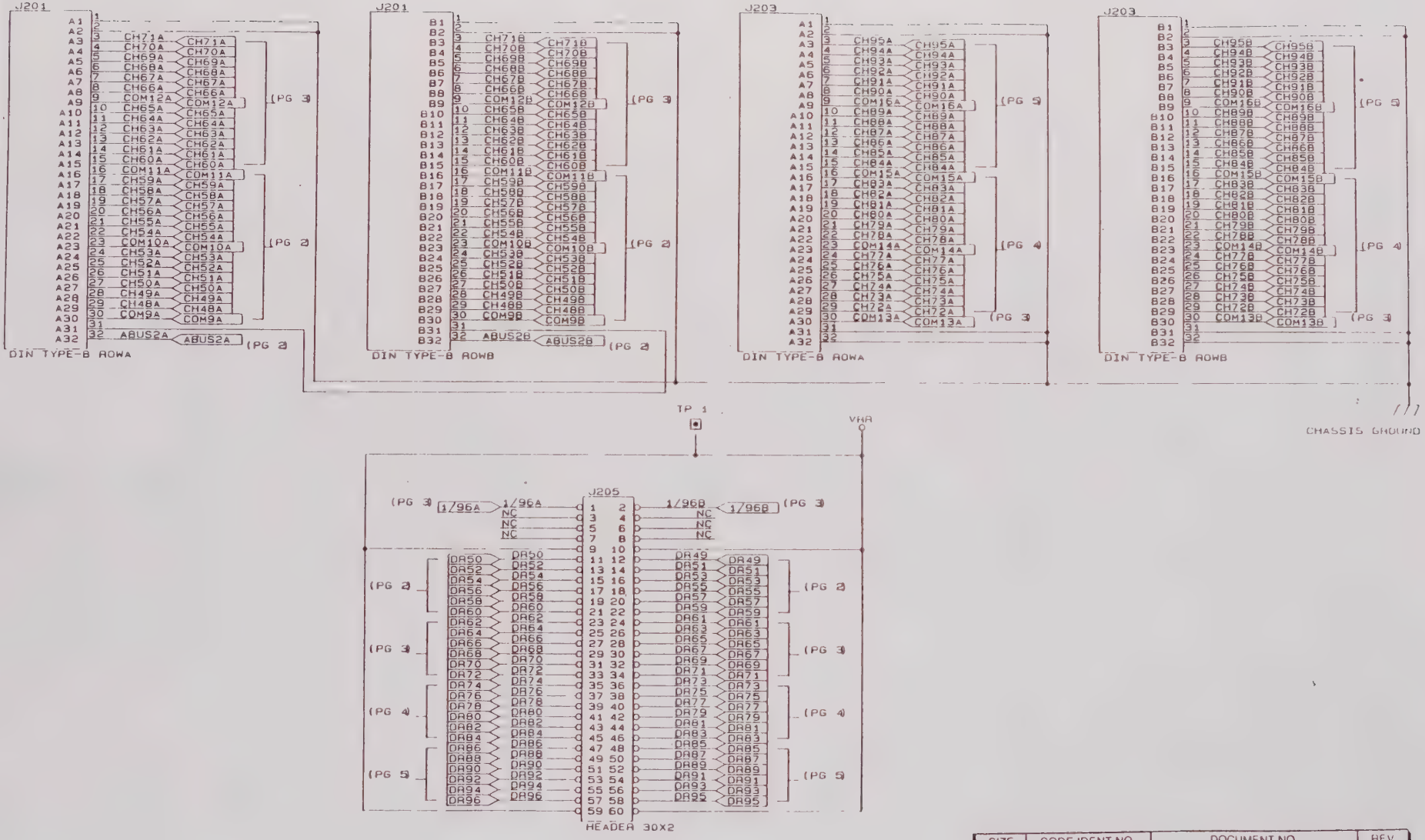

SIZE	CODE IDENT NO	DOCUMENT NO	REV
B	21793	431992	A
SCALE		SHEET 6 OF 6	

404944 FINAL ASSY., 1260-35

REF DESIG	RACAL-DANA P/N	DESCRIPTION	FSC	MANUFACTURER'S P/N
{1}1	401989	PCB ASSY., 1260-35	21793	401989
{2}1	401992	PCB ASSY., 1260-35D	21793	401992
{5}1	455901	PANEL, SIDE, RIGHT	21793	455901
{6}1	455779-003	PANEL, SIDE, LEFT	21793	455779-003
{7}1	455781	PANEL, REAR, SINGLE	21793	455781
{8}1	455784-001	PANEL, VXI TOP	21793	455784-001
{9}1	455784-002	PANEL, VXI BOTTOM	21793	455784-002
{10}1	455814	PANEL, FRONT	21793	455814
{22}1	611264	HANDLE, EXTRACTOR, BOTTOM	62559	20817-327
{23}1	611265	HANDLE, EXTRACTOR, TOP	62559	20817-328
{24}5	611266	MOUNTING HARDWARE, HANDLE	62559	21100-745
{25}32	615539	SCREW, PFH, 4-40X. 125	-	-
{27}2	616405	SCREW, PFH, M2.5-.45 X 12	-	-
{28}8	616480	SCREW, PFH, 4-40 X .375	-	-
{29}7	616251	SCREW, PPH, SEMS ASSY, 4-40X.250	78189	
{32}1	921212-010	LABEL, VXI, 1260-35	21793	921212-010
{33}A/R	920962	LOCTITE, 242, MED STR.	05972	272
{35}1	921059	LABEL, CAUTION, STATIC	21793	921059
{36}1	921148	LABEL SET, VXI-VME	21793	921148
{38}1	404975	SHIPPING KIT, 1260-35	21793	404975

404975 SHIPPING KIT 1260-35

REF DESIG	RACAL-DANA P/N	DESCRIPTION	FSC	MANUFACTURER'S P/N
{1}2	455540	KEY, LOCKOUT, TTL, A/C	21793	455540
{2}2	455541	KEY, LOCKOUT, TTL, A/C	21793	455541
{3}2	455542	KEY, LOCKOUT, TTL, A/C	21793	455542
{6}4	602004	CONNECTOR, TYPE B, FEMALE, 64-PIN	06383	120-064-455
{7}4	602004-001	STRAIN RELIEF, WITH HANDLE	06383	120-000-032
{8}4	602004-002	PULL TAB, SOCKET, 2.5W	06383	LPT-50
{11}3	615013	SCREW, PPF, 2-56 X .188	-	-

401989 PCB ASSY., 1260-35

REF DESIG	RACAL-DANA P/N	DESCRIPTION	FSC	MANUFACTURER'S P/N
C1	110126	CAP, TANTA, 6.8UF, 35V, 20 PERCENT	05397	T355F685M035A5
C2	110126	CAP, TANTA, 6.8UF, 35V, 20 PERCENT	05397	T355F685M035A5
C3	110126	CAP, TANTA, 6.8UF, 35V, 20 PERCENT	05397	T355F685M035A5
C4	110126	CAP, TANTA, 6.8UF, 35V, 20 PERCENT	05397	T355F685M035A5
C100-C102	R-21-1801	CAP, CHIP, 10 NF	95275	VJ1206Y103MF
C103	130177	CAPACITOR, CHIP, SMD, 270PF	95275	VJ1206A271KXAMT
C104-C160	R-21-1801	CAP, CHIP, 10 NF	95275	VJ1206Y103MF
J3	601925	CONNECTOR, PCB, RECEPT, 3 ROW, 96P	52072	618008
J4	601925	CONNECTOR, PCB, RECEPT, 3 ROW, 96P	52072	618008
J200	602005	CONNECTOR, DIN TYPE B, MALE, 64 PIN	06383	100-064033B
J202	602005	CONNECTOR, DIN TYPE B, MALE, 64 PIN	06383	100-064033B
K1-K48	310197	RELAY, 2 FORM C	61529	TO2E-24V
K97	310197	RELAY, 2 FORM C	61529	TO2E-24V
L1	100164	CAP, FEED-THRU,800PF, 50V	00779	842448-2
L2	310193	CHOKE, SHIELDED, 5UH	91637	IH-5-5-10
L3	310193	CHOKE, SHIELDED, 5UH	91637	IH-5-5-10
L4	100164	CAP, FEED-THRU,800PF, 50V	00779	842448-2
L5	600245	JUMPER, INSULATED	52210	L-2007-1
P1	601675-001	CONNECTOR, EUROCARD, 96 PIN (MODIFIED)	21793	601675-001
P2	601675-001	CONNECTOR, EUROCARD, 96 PIN (MODIFIED)	21793	601675-001
SW1	601969	SWITCH, DIP 6 POS, LOW PROFILE	65832	K406S
SW2	601969	SWITCH, DIP 6 POS, LOW PROFILE	65832	K406S
SW3	601969	SWITCH, DIP 6 POS, LOW PROFILE	65832	K406S
TP1	601197	POST, TEST, .025 SQ	00779	6-87022-6
TP2	601197	POST, TEST, .025 SQ	00779	6-87022-6
U1	231131	IC, DIGITAL, SHIFT REGISTER	18324	PC74HCT164D
U2	231130	IC, DIGITAL, FLIP FLOP	18324	PC74HC273
U3	231098	IC, SOIC TRANSISTOR	56289	ULN-2803LW
U4	231120	IC, 8-BIT, PARALLEL/SERIAL OUT S.R.	18324	74HCT166D
U5	231131	IC, DIGITAL, SHIFT REGISTER	18324	PC74HCT164D
U6	231130	IC, DIGITAL, FLIP FLOP	18324	PC74HC273
U7	231098	IC, SOIC TRANSISTOR	56289	ULN-2803LW
U8	231120	IC, 8-BIT, PARALLEL/SERIAL OUT S.R.	18324	74HCT166D
U9	231131	IC, DIGITAL, SHIFT REGISTER	18324	PC74HCT164D
U10	231130	IC, DIGITAL, FLIP FLOP	18324	PC74HC273
U11	231098	IC, SOIC TRANSISTOR	56289	ULN-2803LW
U12	231120	IC, 8-BIT, PARALLEL/SERIAL OUT S.R.	18324	74HCT166D
U13	231131	IC, DIGITAL, SHIFT REGISTER	18324	PC74HCT164D
U14	231130	IC, DIGITAL, FLIP FLOP	18324	PC74HC273
U15	231098	IC, SOIC TRANSISTOR	56289	ULN-2803LW
U16	231120	IC, 8-BIT, PARALLEL/SERIAL OUT S.R.	18324	74HCT166D
U17	231131	IC, DIGITAL, SHIFT REGISTER	18324	PC74HCT164D
U18	231130	IC, DIGITAL, FLIP FLOP	18324	PC74HC273
U19	231098	IC, SOIC TRANSISTOR	56289	ULN-2803LW
U20	231120	IC, 8-BIT, PARALLEL/SERIAL OUT S.R.	18324	74HCT166D
U21	231131	IC, DIGITAL, SHIFT REGISTER	18324	PC74HCT164D
U22	231130	IC, DIGITAL, FLIP FLOP	18324	PC74HC273
U23	231098	IC, SOIC TRANSISTOR	56289	ULN-2803LW
U24	231120	IC, 8-BIT, PARALLEL/SERIAL OUT S.R.	18324	74HCT166D
U25	231131	IC, DIGITAL, SHIFT REGISTER	18324	PC74HCT164D
U26	231130	IC, DIGITAL, FLIP FLOP	18324	PC74HC273
U27	231098	IC, SOIC TRANSISTOR	56289	ULN-2803LW
U28	231120	IC, 8-BIT, PARALLEL/SERIAL OUT S.R.	18324	74HCT166D
U29	231131	IC, DIGITAL, SHIFT REGISTER	18324	PC74HCT164D
U30	231130	IC, DIGITAL, FLIP FLOP	18324	PC74HC273
U31	231098	IC, SOIC TRANSISTOR	56289	ULN-2803LW
U32	231120	IC, 8-BIT, PARALLEL/SERIAL OUT S.R.	18324	74HCT166D
U33	231131	IC, DIGITAL, SHIFT REGISTER	18324	PC74HCT164D
U34	231130	IC, DIGITAL, FLIP FLOP	18324	PC74HC273

401989 PCB ASSY., 1260-35

REF DESIG	RACAL-DANA P/N	DESCRIPTION	FSC	MANUFACTURER'S P/N
U35	231098	IC, SOIC TRANSISTOR	56289	ULN-2803LW
U36	231120	IC, 8-BIT, PARALLEL/SERIAL OUT S.R.	18324	74HCT166D
U37	231131	IC, DIGITAL, SHIFT REGISTER	18324	PC74HCT164D
U38	231130	IC, DIGITAL, FLIP FLOP	18324	PC74HC273
U39	231098	IC, SOIC TRANSISTOR	56289	ULN-2803LW
U40	231120	IC, 8-BIT, PARALLEL/SERIAL OUT S.R.	18324	74HCT166D
U41	231131	IC, DIGITAL, SHIFT REGISTER	18324	PC74HCT164D
U42	231130	IC, DIGITAL, FLIP FLOP	18324	PC74HC273
U43	231098	IC, SOIC TRANSISTOR	56289	ULN-2803LW
U44	231120	IC, 8-BIT, PARALLEL/SERIAL OUT S.R.	18324	74HCT166D
U45	231131	IC, DIGITAL, SHIFT REGISTER	18324	PC74HCT164D
U46	231130	IC, DIGITAL, FLIP FLOP	18324	PC74HC273
U47	231098	IC, SOIC TRANSISTOR	56289	ULN-2803LW
U48	231120	IC, 8-BIT, PARALLEL/SERIAL OUT S.R.	18324	74HCT166D
U49	231131	IC, DIGITAL, SHIFT REGISTER	18324	PC74HCT164D
U50	231130	IC, DIGITAL, FLIP FLOP	18324	PC74HC273
U51	231098	IC, SOIC TRANSISTOR	56289	ULN-2803LW
U52	231120	IC, 8-BIT, PARALLEL/SERIAL OUT S.R.	18324	74HCT166D
U53	231153	IC, PROGRAMMED PLA	21793	231153
U54	231094	IC, DEMUX DECODER	18324	N74LS138D
U55	231094	IC, DEMUX DECODER	18324	N74LS138D
U56	231135	IC, DIGITAL, 4-BIT COMPARATOR	18324	PC74HCT85D
U57	231093	IC, QUAD COMPARATOR	04713	LM339D
U60	231120	IC, 8-BIT, PARALLEL/SERIAL OUT S.R.	18324	74HCT166D
U61	231131	IC, DIGITAL, SHIFT REGISTER	18324	PC74HCT164D
U62	231131	IC, DIGITAL, SHIFT REGISTER	18324	PC74HCT164D
U70	231152-001	IC, DIGITAL 16L8, PAL	21793	231152-001
U71	231147	IC, MULTIPLEXER	04713	74HC253D
U72	231147	IC, MULTIPLEXER	04713	74HC253D
U73	231096	IC, QUAD DIFF RECEIVER	01295	AM26LS32ACD
U74	231096	IC, QUAD DIFF RECEIVER	01295	AM26LS32ACD
U75	231125	IC, DIGITAL, LINE DRIVER	27014	DS26LS31MN
U76	231154	IC, PROGRAMMED PLA	21793	231154
U77	231147	IC, MULTIPLEXER	04713	74HC253D
W2-W11	602007	CONNECTOR, STRAIGHT, DOUBLE ROW, 4 PIN	52072	CAD0423B43
Z1	080119	RES NETWORK, 220K	91637	SOMC-1603-224K
Z2	080117	RES NETWORK, 16P8R, 47K	73138	628-AL-473J
Z3	080119	RES NETWORK, 220K	91637	SOMC-1603-224K
Z4	080117	RES NETWORK, 16P8R, 47K	73138	628-AL-473J
Z5	080119	RES NETWORK, 220K	91637	SOMC-1603-224K
Z6	080117	RES NETWORK, 16P8R, 47K	73138	628-AL-473J
Z7	080119	RES NETWORK, 220K	91637	SOMC-1603-224K
Z8	080117	RES NETWORK, 16P8R, 47K	73138	628-AL-473J
Z9	080119	RES NETWORK, 220K	91637	SOMC-1603-224K
Z10	080117	RES NETWORK, 16P8R, 47K	73138	628-AL-473J
Z11	080119	RES NETWORK, 220K	91637	SOMC-1603-224K
Z12	080117	RES NETWORK, 16P8R, 47K	73138	628-AL-473J
Z13	080119	RES NETWORK, 220K	91637	SOMC-1603-224K
Z14	080117	RES NETWORK, 16P8R, 47K	73138	628-AL-473J
Z15	080119	RES NETWORK, 220K	91637	SOMC-1603-224K
Z16	080117	RES NETWORK, 16P8R, 47K	73138	628-AL-473J
Z17	080119	RES NETWORK, 220K	91637	SOMC-1603-224K
Z18	080117	RES NETWORK, 16P8R, 47K	73138	628-AL-473J
Z19	080119	RES NETWORK, 220K	91637	SOMC-1603-224K
Z20	080117	RES NETWORK, 16P8R, 47K	73138	628-AL-473J
Z21	080119	RES NETWORK, 220K	91637	SOMC-1603-224K
Z22	080117	RES NETWORK, 16P8R, 47K	73138	628-AL-473J
Z23	080119	RES NETWORK, 220K	91637	SOMC-1603-224K
Z24	080117	RES NETWORK, 16P8R, 47K	73138	628-AL-473J

401989 PCB ASSY., 1260-35

REF DESIG	RACAL-DANA P/N	DESCRIPTION	FSC	MANUFACTURER'S P/N
Z25	080119	RES NETWORK, 220K	91637	SOMC-1603-224K
Z26	080117	RES NETWORK, 15P8R, 47K	73138	628-AL-473J
Z27	080114	RES NETWORK, 15P8R, 15K	73138	628-AL-153J
Z28	080120	RES NETWORK, 10K	11236	767-161R10K
(43)1	401951	PCB ASSY., LBUS JUMPER	21793	401951
(45)1	411989	PCB, 1260-35 (UNLOADED)	21793	411989
(48)1	500022	WIRE, BARE COPPER/TIN, 22 GA	21793	500022
(58)20	601195	PLUG, JUMPER, 0.1 CTR, LOW PROFILE	00779	530153-2
(66)1	602023	CABLE ASSY., IDC 60 PIN	21793	602023
(67)6	610257	STANDOFF, SWAGE, 1/4D, 4-40 X .31	06540	9534BB04403A
(70)1	611258-001	STANDOFF, SWAGE 4-40 X .170	06540	8091-11B-B-440-28

401992 PCB ASSY., 1260-35D

REF DESIG	RACAL-DANA P/N	DESCRIPTION	FSC	MANUFACTURER'S P/N
J201	602005	CONNECTOR, DIN TYPE B, MALE, 64 PIN	06383	100-064033B
J203	602005	CONNECTOR, DIN TYPE B, MALE, 64 PIN	06383	100-064033B
J204	602008	CONNECTOR, RIGHT ANGLE, 60 PIN	52072	CA-60HRM-1F-S
K49-K96	310197	RELAY, 2 FORM C	61529	TO2E-24V
TP3	601197	POST, TEST, .025 SQ	00779	6-87022-6
W12-W20	602006	CONNECTOR, RIGHT ANGLE, 4 PIN	52072	CA-D04R-23R-09
(3)1	411992	PCB, 1260-35D (UNLOADED)	21793	411992
(12)18	601195	PLUG, JUMPER, 0.1 CTR, LOW PROFILE	00779	530153-2

List of Suppliers

FSC	SUPPLIER
00779	AMP INC. HARRISBURG, PA
01295	TEXAS INSTRUMENTS INC. DALLAS, TX
01526	GENICOM CORP. WAYNESBORO, VA
02735	RCA (SOLID STATE DIV.) SOMERVILLE, NEW JERSEY
03508	GENERAL ELECTRIC CO. (SEMI-CONDUCTOR PRODUCTS) AUBURN, NY
04713	MOTOROLA INC. (SEMICONDUCTOR PRODUCTS DIV) PHOENIX, AZ
05397	UNION CARBIDE CORP (MATERIALS SYSTEMS DIV) CLEVELAND, OHIO
05972	LOCTITE CORP HARTFORD, CONN
06383	PANDUIT CORP TINLEY PARK, CA
06540	AMATOM ELECTRONIC HARDWARE NEW ROCHELLE, NY
06776	ROBINSON NUGENT INC. NEW ALBANY, IN
07263	FAIRCHILD (SEMICONDUCTOR DIV.) MOUNTAIN VIEW, CA
08261	SPECTRA-STRIP CORP GARDEN GROVE, CA
11236	CTS OF BERNE INC. BERNE, INDIANA
16956	DENNISON MFG. CO. FRAMINGTON, MA
18324	SIGNETICS INC. SUNNYVALE, CA
21793	RACAL-DANA INSTRUMENTS INC. IRVINE, CA
22526	DUPONT CONNECTOR CO. NEW CUMBERLAND, PA
27014	NATIONAL SEMI-CONDUCTOR CORP. SANTA CLARA, CA
29005	STORM PRODUCTS CO. LOS ANGELES, CA
34359	THREE (3) M CO. (COMMERCIAL TAPE DIV.) ST. PAUL, MN
52072	CIRCUIT ASSY. CORP. COSTA MESA, CA
52210	GETTING ENGRG & MFG. CO. SPRING MILLS, PA
53387	THREE (3) M CO. ST. PAUL, MN
55322	SAMTEC, INC. NEW ALBANY, IN
56289	SPAGUE ELECTRIC CO. N. ADAMS, MA
61529	AROMAT CORP. CUPERTINO, CA
62559	SCHROFF, INC. WARWICK, RI
65832	AMERICAN RESEARCH ENGRG ELGIN, IL
70903	BELDEN CORP. CHICAGO, IL
73138	BECKMAN INSTRUMENTS FULLERTON, CA
73445	AMPEREX ELECTRONIC CORP. HICKSVILLE, NY
78189	ILLINOIS TOOL WORKS, INC. (SHAKEPROOF, DIV.) ELGIN, IL
81349	MILITARY SPECIFICATION
86928	SEASTROM MFG CO. INC. GLENDALE, CA
91637	DALE ELECTRONICS INC. COLUMBUS, NEBRASKA
92194	ALPHA WIRE ELIZABETH, NEW JERSEY
95275	VITRAMON, INC. BRIDGEPORT, CONNECTICUT
98291	SEALECTRO CORP. MAMARONECK, NY

1260-40 SIGNAL MATRIX MODULE

1260 VXI SWITCHING CARD

RACAL-DANA

RACAL-DANA INSTRUMENTS INC.

4 Goodyear Street, P.O. Box C-19541, Irvine, CA 92713
Telephone: 714/859-8999, Fax: 714/859-2505

RACAL INSTRUMENTS, LTD.

480 Bath Road, Slough, Berkshire, SL1 6BE, England
Telephone: 44-628 604455, Fax: 44-628 662017

RACAL SYSTEMS ELECTRONIQUE S.A.

18 Avenue Dutartre, 78150 Le Chesnay, France
Telephone: 33-1-3-955-8888, Fax: 33-1-3-955-6735

RACAL ELEKTRONIK SYSTEMS GmbH

Frankenforster Strasse 21, D-5060 Bergisch-Gladbach 1, Federal Republic of Germany
Telephone: 49-22-04-60081, Fax: 49-22-04-21491

RACAL SYSTEMS ELETTRONICA

Via Roma, 108/PAL, E1, 20060 Cassina de Pecchi, Milan, Italy
Telephone: 39-2-9514717/737/770, Fax: 39-2-9514522

RACAL

PUBLICATION DATE: APRIL 1992

Copyright © 1992 by Racal-Dana Instruments Inc. Printed in the United States of America. All rights reserved.
This book or parts thereof may not be reproduced in any form without written permission of the publishers.

TABLE OF CONTENTS

1260-40 SIGNAL MATRIX MODULE

1.0	1260-40 Signal Matrix Module	1-1
2.0	Installation Instructions	1-3
2.1	Unpacking and Inspection	1-3
2.2	Reshipment Instructions	1-3
2.3	Option 01 Installation	1-3
2.4	Module Installation	1-3
2.4.1	1260-40 ID Byte	1-3
3.0	1260-40 Module Specific Syntax	1-4
3.1	Syntax	1-4
3.2	1260-40 Connector Pin Configurations	1-9
3.3	1260-40 Expansion Port	1-10
4.0	Drawings	1-13
5.0	Parts Lists	1-37
6.0	Wire Lists	1-43
7.0	List of Suppliers	1-55

FIGURES

1-1	1260-40 Functional Diagram	1-1
3-1	1260-40A Configuration	1-6
3-2	1260-40B Configuration	1-7
3-3	1260-40C Configuration	1-8
3-4	1260-40 P201 and P202 Pin Configurations	1-9
3-5	1260-40 P200 and P203 Pin Configurations	1-9

1.0 1260-40 Signal Matrix Module

The 1260-40 Signal Matrix Module is a 4 x 24 matrix. It switches two lines per channel and has the capability of being configured as two 4 x 12 matrices or one 8 x 12 matrix. The configuration is determined at the time of ordering, and is set in the factory. An expansion port is provided to allow the 1260-40 to be used as part of a larger matrix.

Switch Configurations

1260-40A: One 4x24 two wire matrix
1260-40B: One 8x12 two wire matrix
1260-40C: Two 4x12 two wire matrix

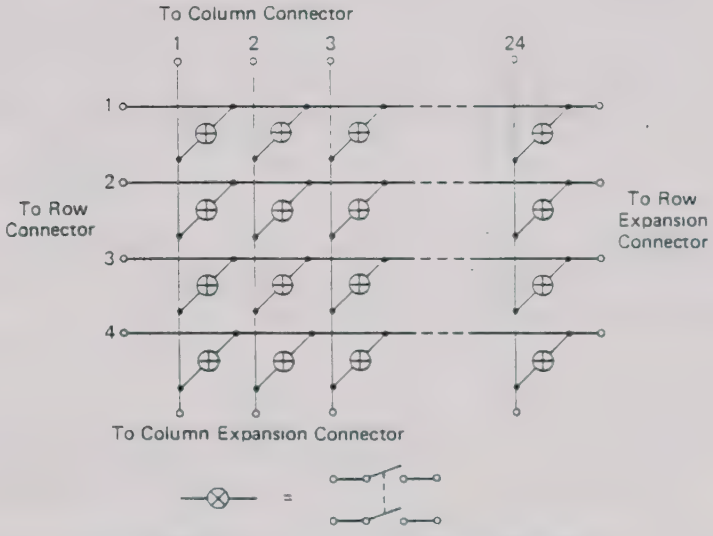

Model 1260-40. 4 x 24 two-wire matrix configuration with provisions for expansion connector.

Figure 1-1, 1260-40 Functional Diagram

Specifications

User Connector	Quick Disconnect
Maximum Switchable Voltage (Terminal-Terminal or Terminal-Chassis)	110 VDC, 125 VAC RMS

Maximum Switchable Current Per Channel	1 ADC, 1A RMS
Maximum Switchable Power Per Channel	30 W DC, 62.5 VA AC
Path Resistance	<3 Ω
Isolation Hi-Lo	$>10^{10}$ ohms
Capacitance	
Open Channel:	<10 pF
Channel-Chassis:	<70 pF
Hi-Lo:	<40 pF
Bandwidth, 50 ohm Termination	30 MHz (typical)
Insertion Loss, 50 ohm Termination	<.30 dB to 100kHz <1 dB to 1 MHz <3.00 dB to 10 MHz
Crosstalk, 50 ohm Termination	<-70 dB to 100 kHz <-50 dB to 1 MHz <-25 dB to 10 MHz
Switching Time	2 ms
Minimum Option 01 Firmware Revision	2.1
Cooling Requirements	
Airflow:	4 litres / sec
Backpressure:	0.5 mm H_2O
Power Requirements (I_{Pm})	
+5 V	2.5 A
+24 V	10 mA per relay
Weight	1.174 Kg (2.59 lbs) without Option 01 1.315 Kg (2.90 lbs) with Option 01

2.0 Installation Instructions

2.1 Unpacking and Inspection

Before unpacking the switching module, check the exterior of the shipping carton for any signs of damage. All irregularities should be noted on the shipping bill. Remove the instrument from its carton, preserving the factory packaging as much as possible. Inspect the switching module for any defect or damage. Immediately notify the carrier if any damage is apparent. Have a qualified person check the instrument for safety before use.

2.2 Reshipment Instructions

Use the original packing when returning the switching module to Racal-Dana for calibration or servicing. The original shipping carton and the instrument's plastic foam will provide the necessary support for safe reshipment. If the original packing is unavailable, wrap the switching module in plastic sheeting and use plastic spray foam to surround and protect the instrument. Reship in either the original or a new shipping carton.

2.3 Option 01 Installation

Installation of the Option 01 to the 1260-40 is described in the Installation section of the 1260 Series VXI Switching Cards Manual.

2.4 Module Installation

Installation of the 1260-40 Switching Module into a VXI mainframe, including the setting of DIP switches, is described in the Installation section of the 1260 Series VXI Switching Cards Manual.

2.4.1 1260-40 ID Byte

Each configuration of the 1260-40 will respond to different sets of values for <group number>, <row number> and <column number>. The set of values the 1260-40 will respond to is controlled by switches 5 and 6 on DIP switch S1 on the 1260-40 PCB. The switch settings that correspond to the three configurations are as follows:

Model	Configuration	S1 Switches 5	6
1260-40A	One 4 x 24	Off	Off
1260-40B	One 8 x 12	On	Off
1260-40C	Two 4 x 12	Off	On
Reserved for future use		On	On

3.0 1260-40 Module Specific Syntax

The Module Specific Syntax for the 1260-40 is required in the use of the OPEN and CLOSE commands. It will also appear in data output by the Master in response to the PDATAOUT and PSETUP commands.

3.1 Syntax

The Module Specific Syntax for the 1260-40 4 x 24 Signal Matrix module is as follows:

<module address>.<group number><rownumber><columnnumber>

where <module address> is the address.

NOTE

The <module address> used here is not the VXIbus defined logical address of the 1260 Series Master. It is peculiar to the 1260 Series and describes the switching module in relation to the Master. This address corresponds to the binary value of the switch setting of SW1 on the switching module PCB.

<group number> is a reference to the matrix containing the relay to be switched. It is value 0 for the 1260-40A and 1260-40B, and value 0 or 1 for the 1260-40C. The 1260-40A and 1260-40B contain only one matrix and <group number> may be omitted if desired.

<rownumber> is the matrix row to be connected to column <columnnumber>, value 0 - 3 or 0 -7 , depending on the configuration set.

<columnnumber> is the matrix column to be connected to row <rownumber>, value 0 - 12 or 0 - 23, depending on the configuration set.

3.1.1 Refer to Figures 3-1, 3-2 and 3-3 for the group numbers, row numbers, column numbers and connector pins to be used in the various configurations of the 1240-40. Note that Figure 3-3 shows the <group number> and <row number> together.

3.1.2 If more than one connection is to be made or broken with contiguous rows or columns, the following format is supported:

<module address> . <rownumber> <columnnumber>
-<rownumber><columnnumber>

Example: OPEN 3.0101-0304

This OPEN statement has the same effect as a series of open commands to open all of the connections between Rows 1 through 3, and Columns 1 through 4.

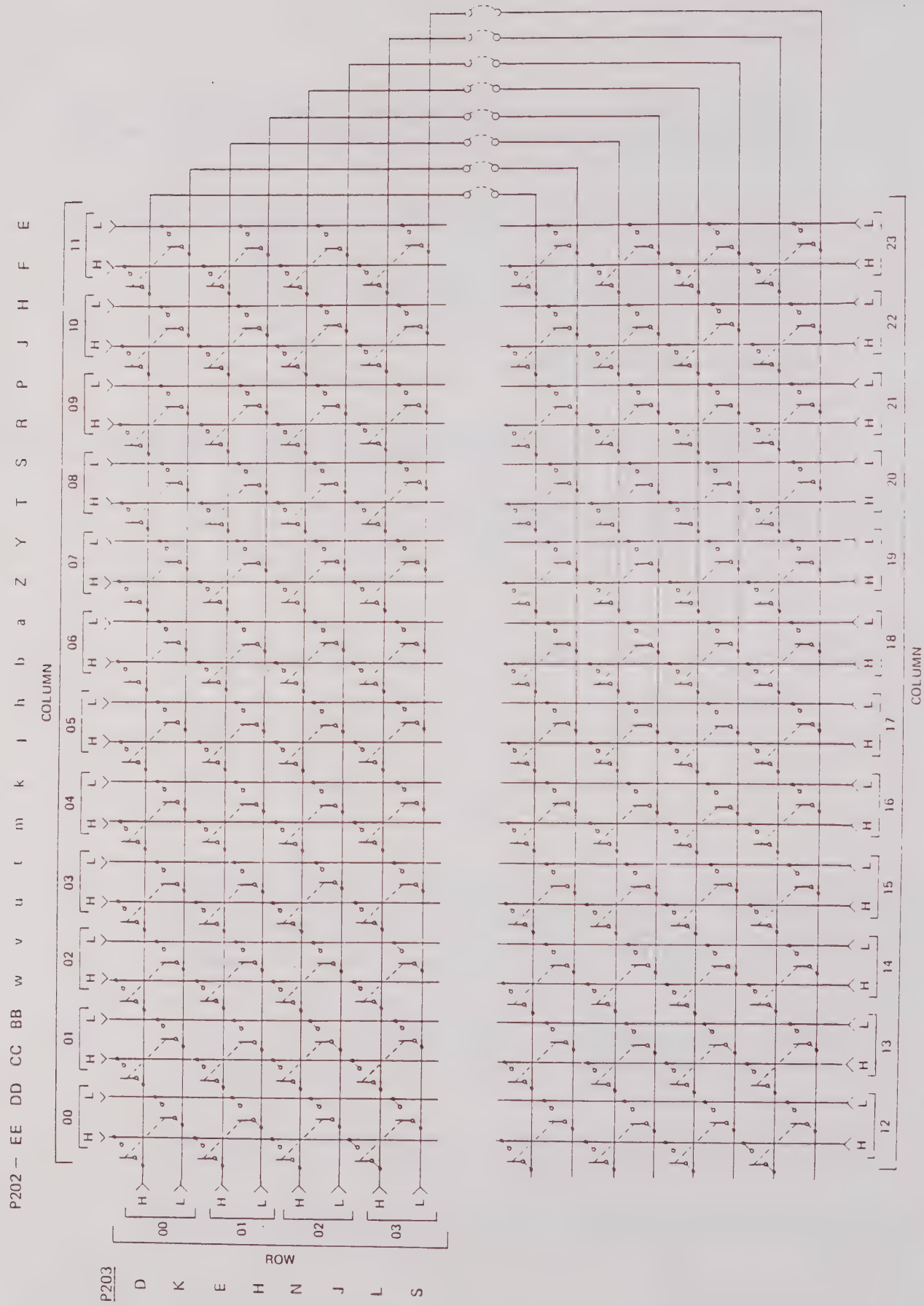

Figure 3-1, 1260-40A Configuration

Figure 3-2, 1260-40B Configuration

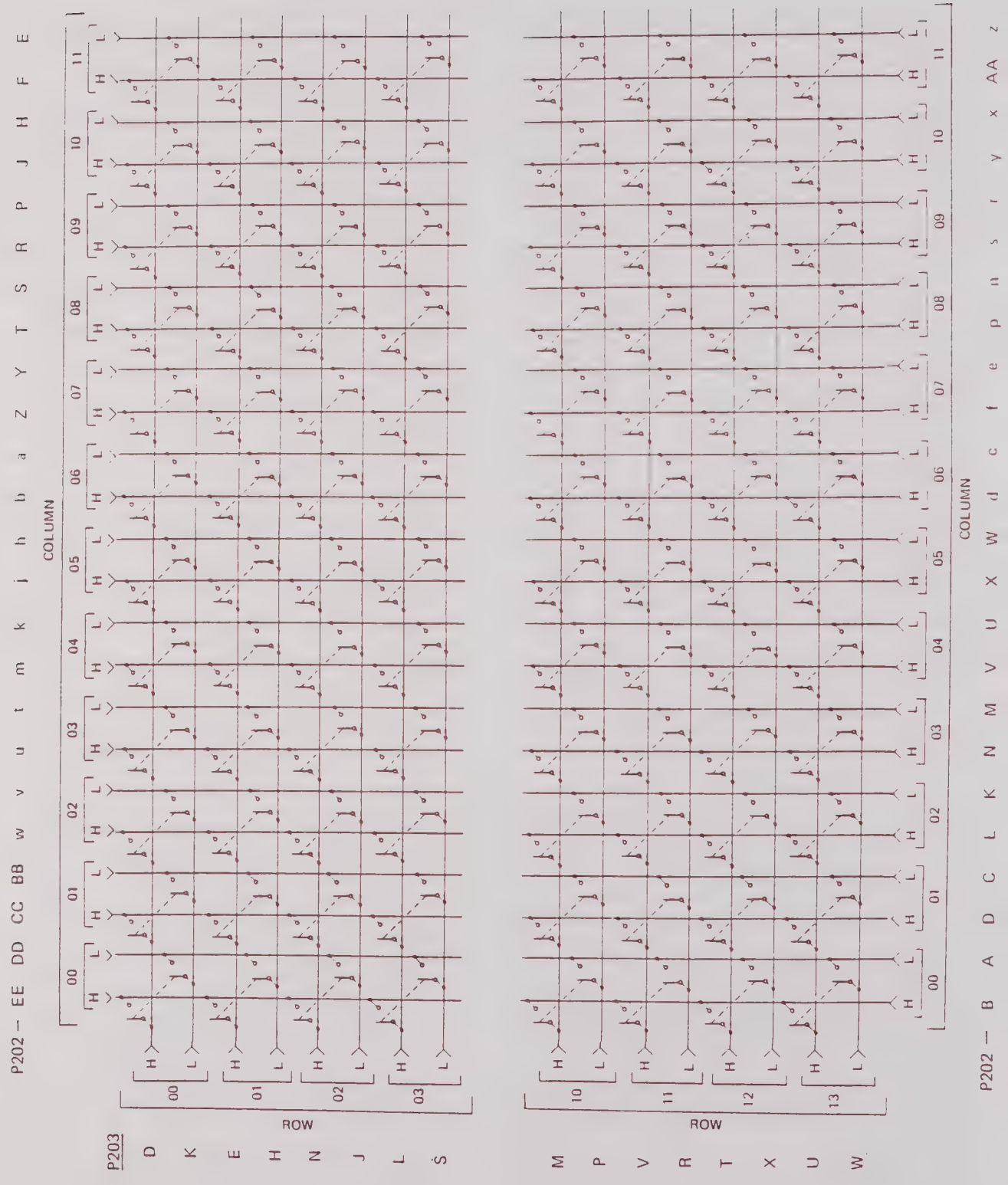

Figure 3-3, 1260-40C Configuration

3.2 1260-40 Connector Pin Configurations

3.2.1 Refer to Figures 3-4 and 3-5 for the pin configurations of P200, P201, P202 and P203 on the 1260-40.

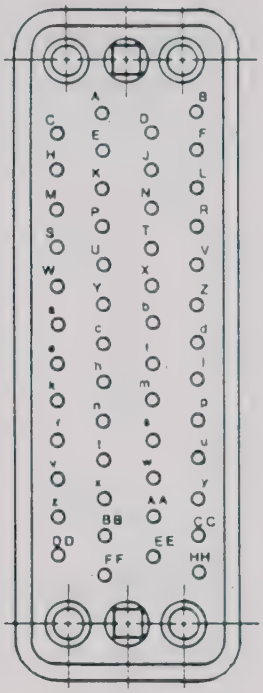

Figure 3-4, 1260-40 P201 and P202 Pin Configurations

Figure 3-5, 1260-40 P200 and P203 Pin Configurations

3.3 1260-40 Expansion Port

3.3.1 The 1260-40 matrix row and column connections on P203 and P202 are in parallel with expansion ports P200 and P201 to allow the 1260-40 to be used in the configuration of matrices larger than those that may be configured by the 1260-40 alone. The pin-to-pin correspondence of the matrix rows and columns connections to the expansion ports is as follows:

Matrix Rows (0 - 7)	Main Port	Expansion Port
Row 0 Hi	P 203-D	P 200-R
Row 0 Lo	P 203-K	P 200-V
Row 1 Hi	P 203-E	P 200-P
Row 1 Lo	P 203-H	P 200-M
Row 2 Hi	P 203-N	P 200-S
Row 2 Lo	P 203-J	P 200-L
Row 3 Hi	P 203-L	P 200-C
Row 3 Lo	P 203-S	P 200-D
Row 4 Hi	P 203-M	P 200-H
Row 4 Lo	P 203-P	P 200-E
Row 5 Hi	P 203-V	P 200-K
Row 5 Lo	P 203-R	P 200-D
Row 6 Hi	P 203-T	P 200-B
Row 6 Lo	P 203-X	P 200-F
Row 7 Hi	P 203-U	P 200-A
Row 7 Lo	P 203-W	P 200-C

Matrix Columns (0 - 23)	Main Port	Expansion Port
Column 0 Hi	P 202-EE	P 201-C
Column 0 Lo	P 202-DD	P 201-D
Column 1 Hi	P 202-CC	P 201-E
Column 1 Lo	P 202-BB	P 201-F
Column 2 Hi	P 202-w	P 201-M
Column 2 Lo	P 202-v	P 201-N
Column 3 Hi	P 202-u	P 201-P
Column 3 Lo	P 202-t	P 201-R
Column 4 Hi	P 202-m	P 201-W
Column 4 Lo	P 202-k	P 201-X
Column 5 Hi	P 202-j	P 201-Y
Column 5 Lo	P 202-h	P 201-Z
Column 6 Hi	P 202-b	P 201-e
Column 6 Lo	P 202-a	P 201-f
Column 7 Hi	P 202-Z	P 201-h
Column 7 Lo	P 202-Y	P 201-j
Column 8 Hi	P 202-T	P 201-r
Column 8 Lo	P 202-S	P 201-s
Column 9 Hi	P 202-R	P 201-t
Column 9 Lo	P 202-P	P 201-u
Column 10 Hi	P 202-J	P 201-z
Column 10 Lo	P 202-H	P 201-AA
Column 11 Hi	P 202-F	P 201-BB
Column 11 Lo	P 202-E	P 201-CC
Column 12 Hi	P 202-B	P 201-FF
Column 12 Lo	P 202-A	P 201-HH

Matrix Columns (0 - 23)	Main Port	Expansion Port
Column 13 Hi	P 202-D	P 201-DD
Column 13 Lo	P 202-C	P 201-EE
Column 14 Hi	P 202-L	P 201-x
Column 14 Lo	P 202-K	P 201-y
Column 15 Hi	P 202-N	P 201-v
Column 15 Lo	P 202-M	P 201-w
Column 16 Hi	P 202-V	P 201-n
Column 16 Lo	P 202-W	P 201-p
Column 17 Hi	P 202-X	P 201-k
Column 17 Lo	P 202-U	P 201-m
Column 18 Hi	P 202-d	P 201-c
Column 18 Lo	P 202-c	P 201-d
Column 19 Hi	P 202-f	P 201-a
Column 19 Lo	P 202-e	P 201-b
Column 20 Hi	P 202-p	P 201-U
Column 20 Lo	P 202-n	P 201-V
Column 21 Hi	P 202-s	P 201-S
Column 21 Lo	P 202-r	P 201-T
Column 22 Hi	P 202-y	P 201-K
Column 22 Lo	P 202-x	P 201-L
Column 23 Hi	P 202-AA	P 201-H
Column 23 Lo	P 202-z	P 201-J

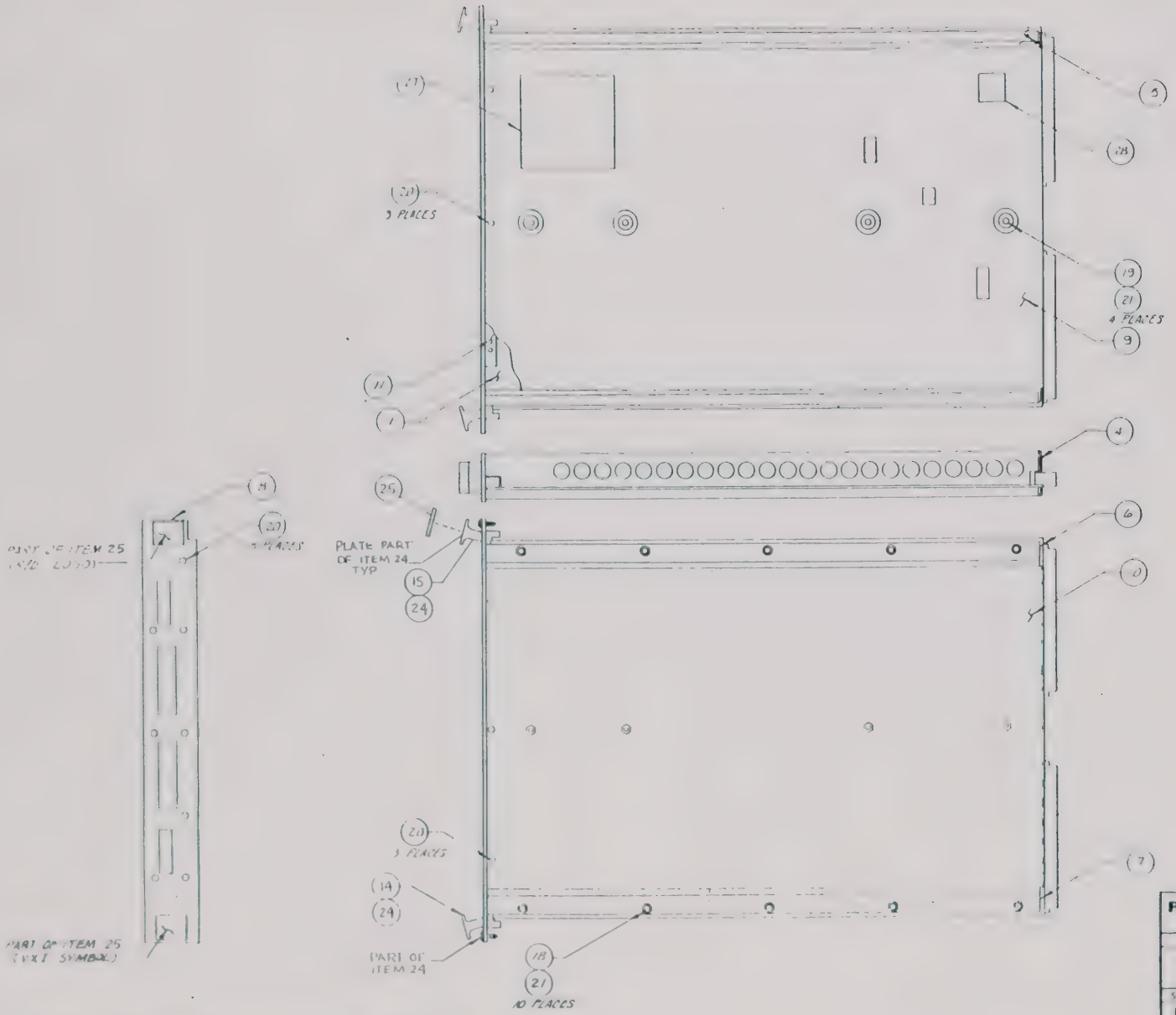

PROPRIETARY NOTICE

THIS DOCUMENT AND THE TECHNICAL DATA HEREON DISCLOSED ARE PROPRIETARY TO RACAL DANA INSTRUMENTS INC AND SHALL NOT WITHOUT EXPRESS WRITTEN PERMISSION OF RACAL DANA INSTRUMENTS INC BE USED RELEASED OR DISCLOSED IN WHOLE OR IN PART OR USED TO SOLICIT QUOTATIONS FROM A COMPETITIVE SOURCE OR USED FOR MANUFACTURE BY ANYONE OTHER THAN RACAL DANA INSTRUMENTS INC THE INFORMATION HEREON HAS BEEN DEVELOPED AT PRIVATE EXPENSE AND MAY ONLY BE USED FOR PURPOSES OF ENGINEERING EVALUATION AND FOR INCORPORATION INTO TECHNICAL SPECIFICATIONS AND OTHER DOCUMENTS WHICH SPECIFY PROCUREMENT OF PRODUCTS FROM RACAL DANA INSTRUMENTS INC

RACAL-DANA Instruments Inc.
4 GOODYEAR IRVINE CALIFORNIA 92714

DOCUMENT TITLE

FINAL ASSY., 1260-40A

SIZE	CODE IDENT NO	DOCUMENT NO	REV
D	21793	404775-001	B

SCALE 1/2 SHEET 1 OF 1

[illegible] SWITCH CONFIGURATION FOR SW1:6 OFF, SW1:5 OFF

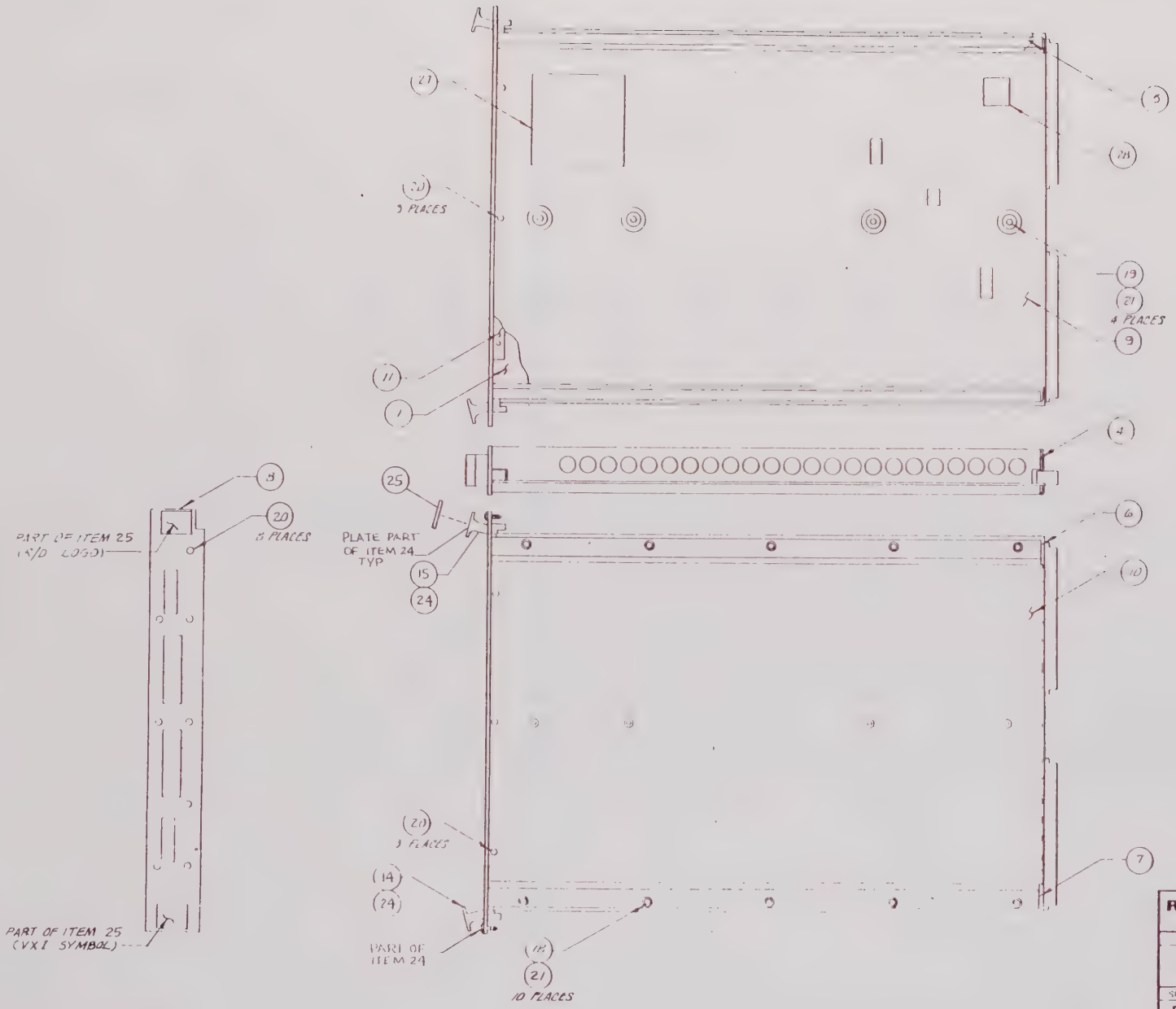

PROPRIETARY NOTICE
THIS DOCUMENT AND THE TECHNICAL DATA HEREIN DISCLOSED ARE PROPRIETARY TO RACAL DANA INSTRUMENTS INC AND SHALL NOT WITHOUT EXPRESS WRITTEN PERMISSION OF RACAL DANA INSTRUMENTS INC BE USED RELEASED OR DISCLOSED IN WHOLE OR IN PART OR USED TO SOLICIT QUOTATIONS FROM A COMPETITIVE SOURCE OR USED FOR MANUFACTURE BY ANYONE OTHER THAN RACAL DANA INSTRUMENTS INC THE INFORMATION HEREON HAS BEEN DEVELOPED AT PRIVATE EXPENSE AND MAY ONLY BE USED FOR PURPOSES OF ENGINEERING EVALUATION AND FOR INCORPORATION INTO TECHNICAL SPECIFICATIONS AND OTHER DOCUMENTS WHICH SPECIFY PROCUREMENT OF PRODUCTS FROM RACAL DANA INSTRUMENTS INC

RACAL-DANA Instruments Inc.			
4 GOODYEAR, IRVINE, CALIFORNIA 92714			
DOCUMENT TITLE			
FINAL ASSY., 1260-40B			
SIZE	CODE IDENT NO	DOCUMENT NO	REV
D	21793	404775-002	B
SCALE NONE		SHEET 1 OF 4	

1. SET SWITCH CONFIGURATION FOR SW1:6 OFF, SW1:5 ON

NOTE:

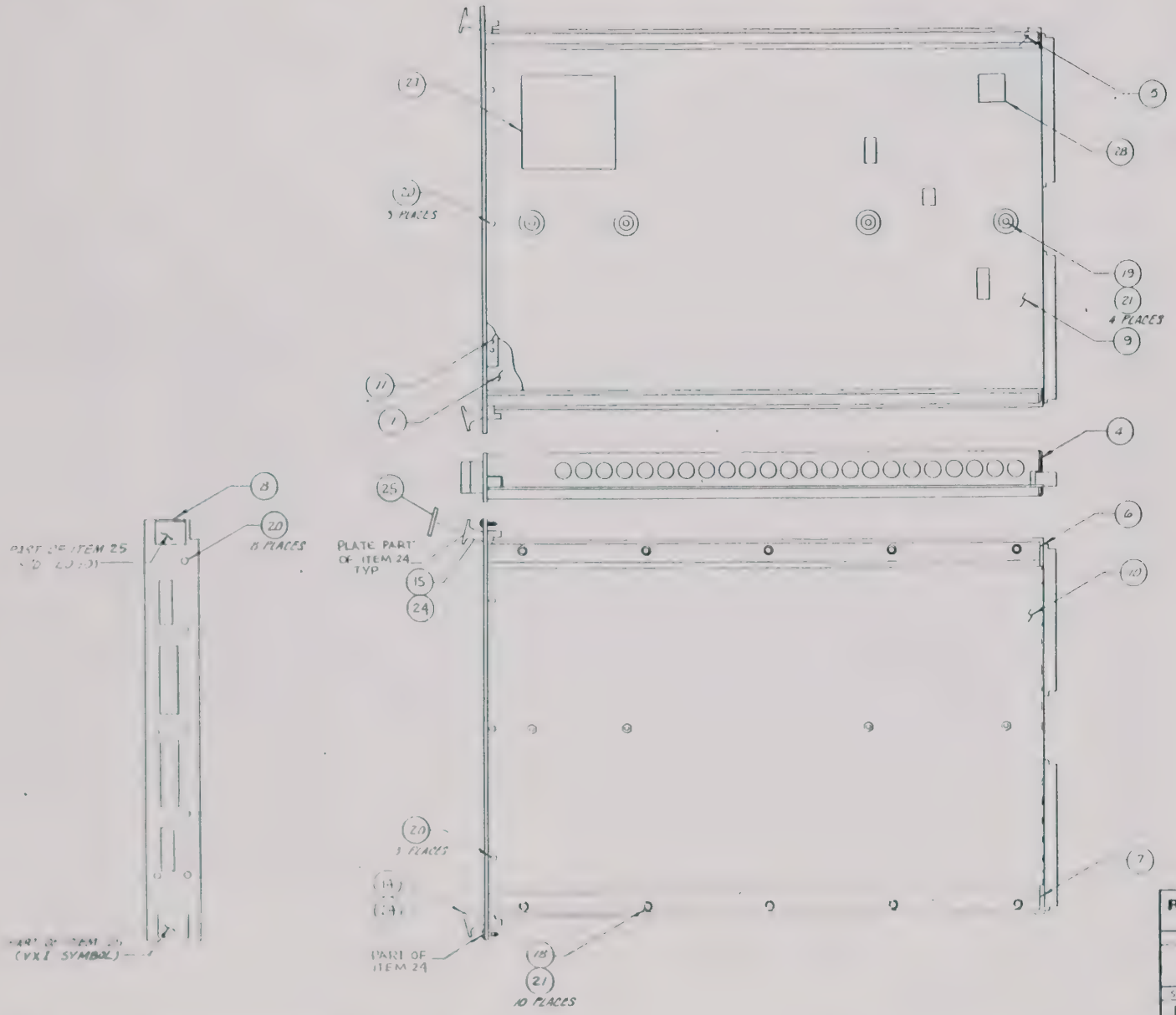

PROPRIETARY NOTICE

THIS DOCUMENT AND THE TECHNICAL DATA HEREIN DISCLOSED ARE PROPRIETARY TO RACAL DANA INSTRUMENTS INC AND SHALL NOT WITHOUT EXPRESS WRITTEN PERMISSION OF RACAL DANA INSTRUMENTS INC BE USED RELEASED OR DISCLOSED IN WHOLE OR IN PART OR USED TO SOLICIT QUOTATIONS FROM A COMPETITIVE SOURCE OR USED FOR MANUFACTURE BY ANYONE OTHER THAN RACAL DANA INSTRUMENTS INC. THE INFORMATION HEREON HAS BEEN DEVELOPED AT PRIVATE EXPENSE AND MAY ONLY BE USED FOR PURPOSES OF ENGINEERING EVALUATION AND FOR INCORPORATION INTO TECHNICAL SPECIFICATIONS AND OTHER DOCUMENTS WHICH SPECIFY PROCUREMENT OF PRODUCTS FROM RACAL DANA INSTRUMENTS INC.

RACAL-DANA Instruments Inc.
4 GOODYEAR, IRVINE CALIFORNIA 92714

DOCUMENT TITLE

FINAL ASSY., 1260-40C

SIZE	CODE IDENT NO	DOCUMENT NO	REV
D	21793	404775-003	B

SCALE 1/2 SHEET 1 OF 4

[illegible] SWITCH CONFIGURATION FOR SW1:6 ON SW1:5 OFF

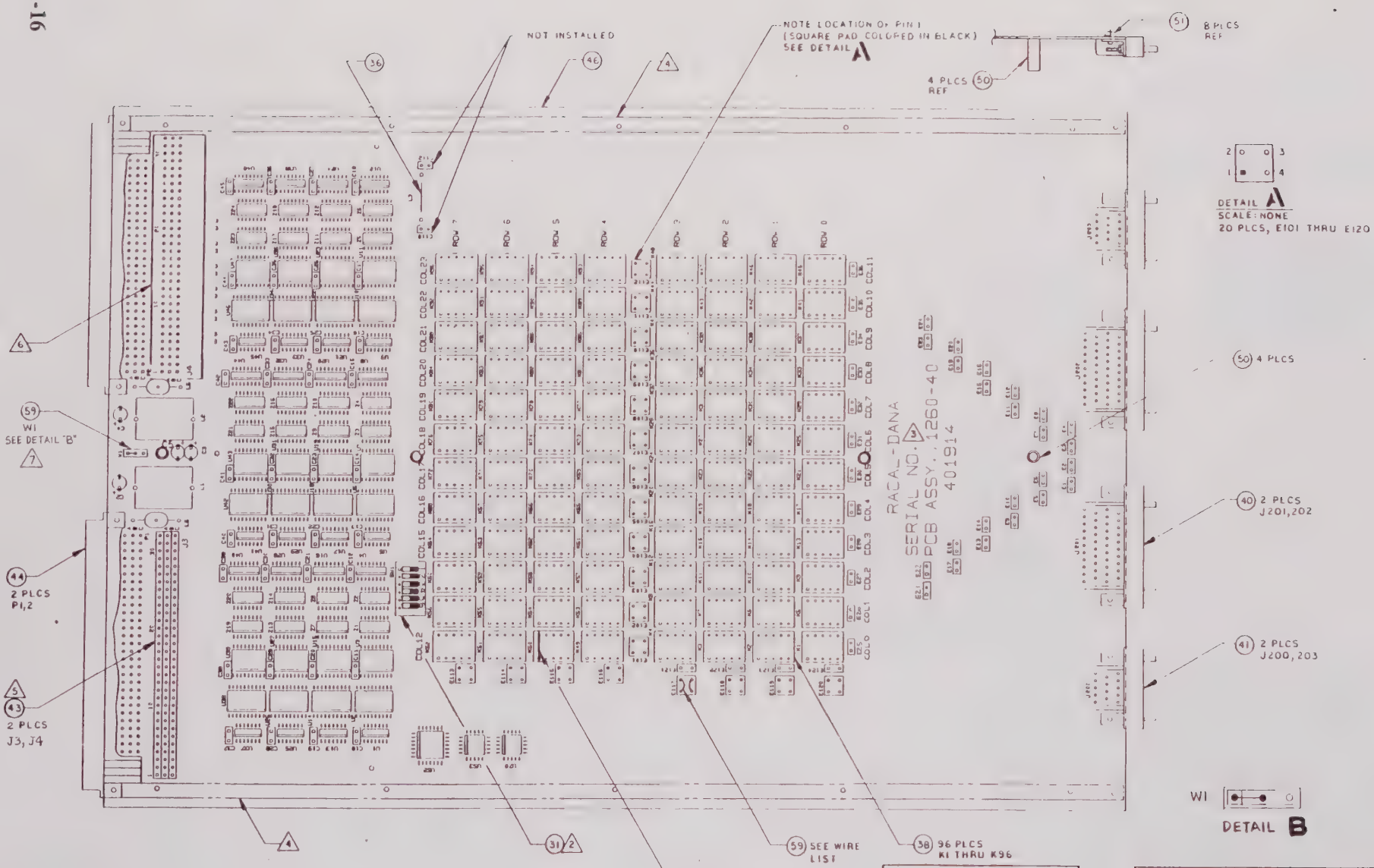

1. INSTALL ITEM 59 BETWEEN WI-1 AND WI-2.
2. INSTALL (ITEM 57) PCB, INTO (ITEM 43) P4.
3. SET ALL S2, S3 SWITCHES TO (ON) OR (CLOSED) OR (1) POSITION. DO NOT WAVE SOLDER.
4. AREAS INDICATED TO BE FLAT AND FREE FROM SOLDER.
5. INK STAMP SERIAL NUMBER APPROX. WHERE SHOWN, COMPONENT SIDE.
6. SET SW1 TO LOGICAL ADDRESS 1 PER TABLE 1
7. REFERENCE SCHEMATIC 431914

NOTES UNLESS OTHERWISE SPECIFIED

PROPRIETARY NOTICE
THIS DOCUMENT AND THE TECHNICAL DATA HEREON DISCLOSED ARE PROPRIETARY TO RACAL DANA INSTRUMENTS INC AND SHALL NOT WITHOUT EXPRESS WRITTEN PERMISSION OF RACAL DANA INSTRUMENTS INC. BE USED RELEASED OR DISCLOSED IN WHOLE OR IN PART OR USED TO SOLICIT QUOTATIONS FROM A COMPETITIVE SOURCE OR USED FOR MANUFACTURE BY ANYONE OTHER THAN RACAL DANA INSTRUMENTS INC. THE INFORMATION HEREON HAS BEEN DEVELOPED AT PRIVATE EXPENSE AND MAY ONLY BE USED FOR PURPOSES OF ENGINEERING EVALUATION AND FOR INCORPORATION INTO TECHNICAL SPECIFICATIONS AND OTHER DOCUMENTS WHICH SPECIFY PROCUREMENT OF PRODUCTS FROM RACAL DANA INSTRUMENTS INC.

RACAL-DANA Instruments Inc.			
4 GOODYEAR, IRVINE, CALIFORNIA 92714			
DOCUMENT TITLE			
PCB ASSY, 1260-40			
SIZE	CODE IDENT NO.	DOCUMENT NO.	REV
D	21793	401914	D
SCALE 1/1		SHEET 1 OF 18	

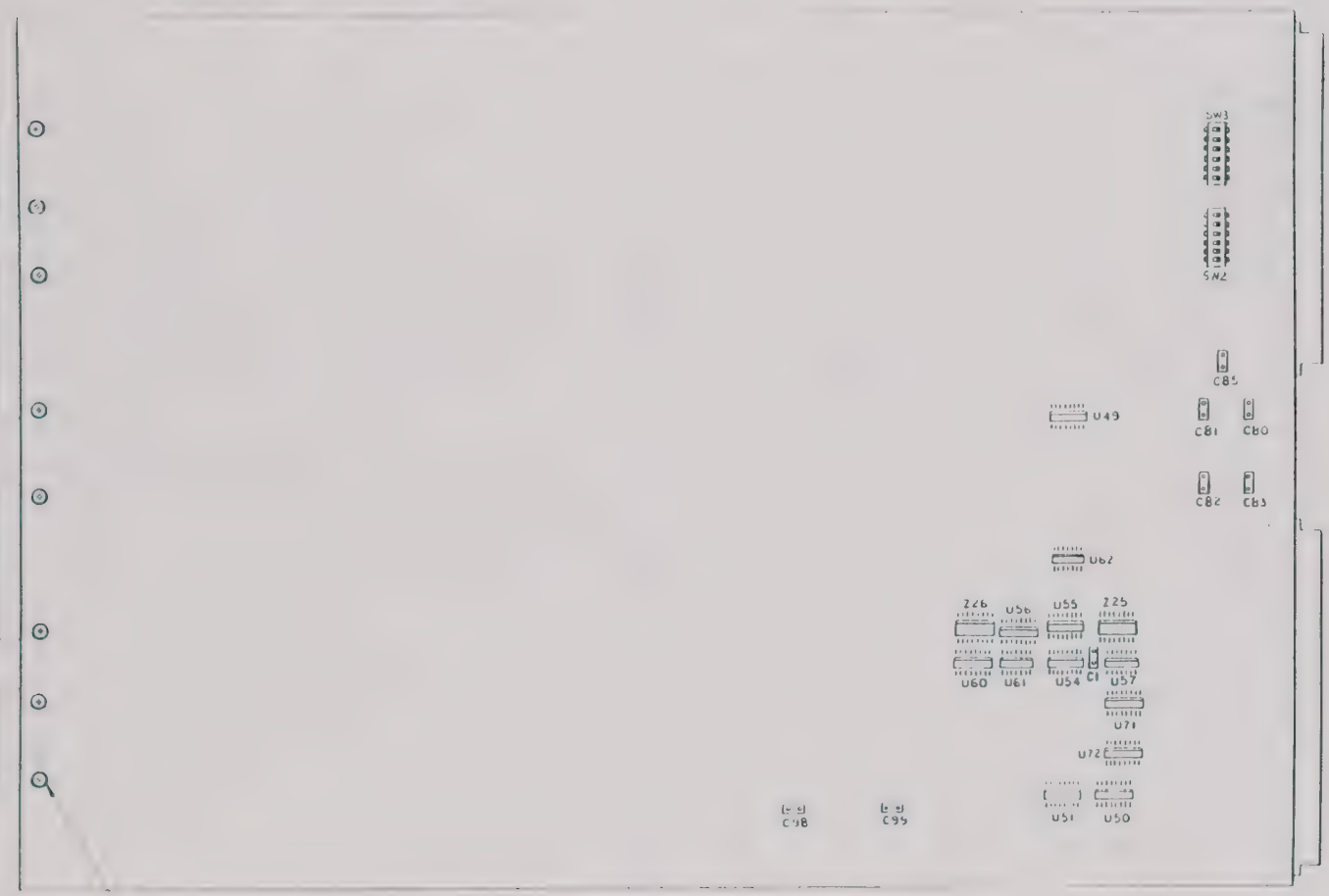

CIRCUIT SIDE

SIZE	CODE IDENT NO	DOCUMENT NO	REV
D	21793	401914	D
SCALE 1.5/1		SHEET 2 OF 18	

REF. DES.	IC TYPE	+5V PIN NO.	GND PIN NO.
U71, 72	74HCT253	16	8
U70	231152 (16L8Q)	20	10
U57	LM339	3	12
U56	74HCT85	16	8
U54, 55	74LS138	16	8
U53	231153 (16R4)	20	10
U52	231154 (22V10H)	28	14
U51	26LS31	16	8
U49, 50	26LS32	16	8
U4, 8, 12, 16, 20, 24, U28, 32, 36, 40, 44, 48, 60	74HCT166	16	8
U3, 7, 11, 15, 19, 23, U27, 31, 35, 39, 43, 47	2803	NC	9
U2, 6, 10, 14, 18, 22, U26, 30, 34, 38, 42, 46	74HCT273	20	10
U1, 5, 9, 13, 17, 21, 25, U29, 33, 37, 41, 45, 61, 62	74HCT164	14	7

IC POWER AND GROUND CONNECTIONS

HIGHEST REF DES
Z26
H1
U72
SW1
J203
L6
K96
E136
C112

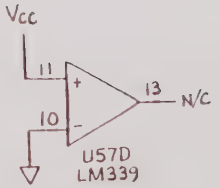

RACAL DANA P/N	TITLE
431914	SCHEM., 1260-40A
431914	SCHEM., 1260-40B
431914	SCHEM., 1260-40C

5. FOR 1260-40A AND 1260-40C JUMPERS ARE NOT INSTALLED IN E101 THRU E112.

4. C110 AND C112 ARE NOT INSTALLED.

3. RELAYS K1 THRU K96 ARE RACAL DANA P/N 310197. ALL RELAYS SHOWN IN DE-ENERGIZED POSITION.

2. RESISTOR NETWORKS ARE IN OHMS.

1. CAPACITOR VALUES ARE IN MICROFARADS, 50V, +/-20% UNLESS OTHERWISE SPECIFIED.

NOTES: UNLESS OTHERWISE SPECIFIED

PROPRIETARY NOTICE

THIS DOCUMENT AND THE TECHNICAL DATA HEREON DISCLOSED ARE PROPRIETARY TO RACAL DANA INSTRUMENTS INC AND SHALL NOT WITHOUT EXPRESS WRITTEN PERMISSION OF RACAL DANA INSTRUMENTS INC BE USED RELEASED OR DISCLOSED IN WHOLE OR IN PART OR USED TO SOLICIT QUOTATIONS FROM A COMPETITIVE SOURCE OR USED FOR MANUFACTURE BY ANYONE OTHER THAN RACAL DANA INSTRUMENTS INC THE INFORMATION HEREON HAS BEEN DEVELOPED AT PRIVATE EXPENSE AND MAY ONLY BE USED FOR PURPOSES OF ENGINEERING EVALUATION AND FOR INCORPORATION INTO TECHNICAL SPECIFICATIONS AND OTHER DOCUMENTS WHICH SPECIFY PROCUREMENT OF PRODUCTS FROM RACAL DANA INSTRUMENTS INC

RACAL-DANA Instruments Inc.
4 GOODYEAR, IRVINE, CALIFORNIA 92714

DOCUMENT TITLE

SCHEM., 1260-40

SIZE	CODE IDENT NO	DOCUMENT NO	REV
B	21793	431914	C

SCALE — | SHEET 1 OF 19

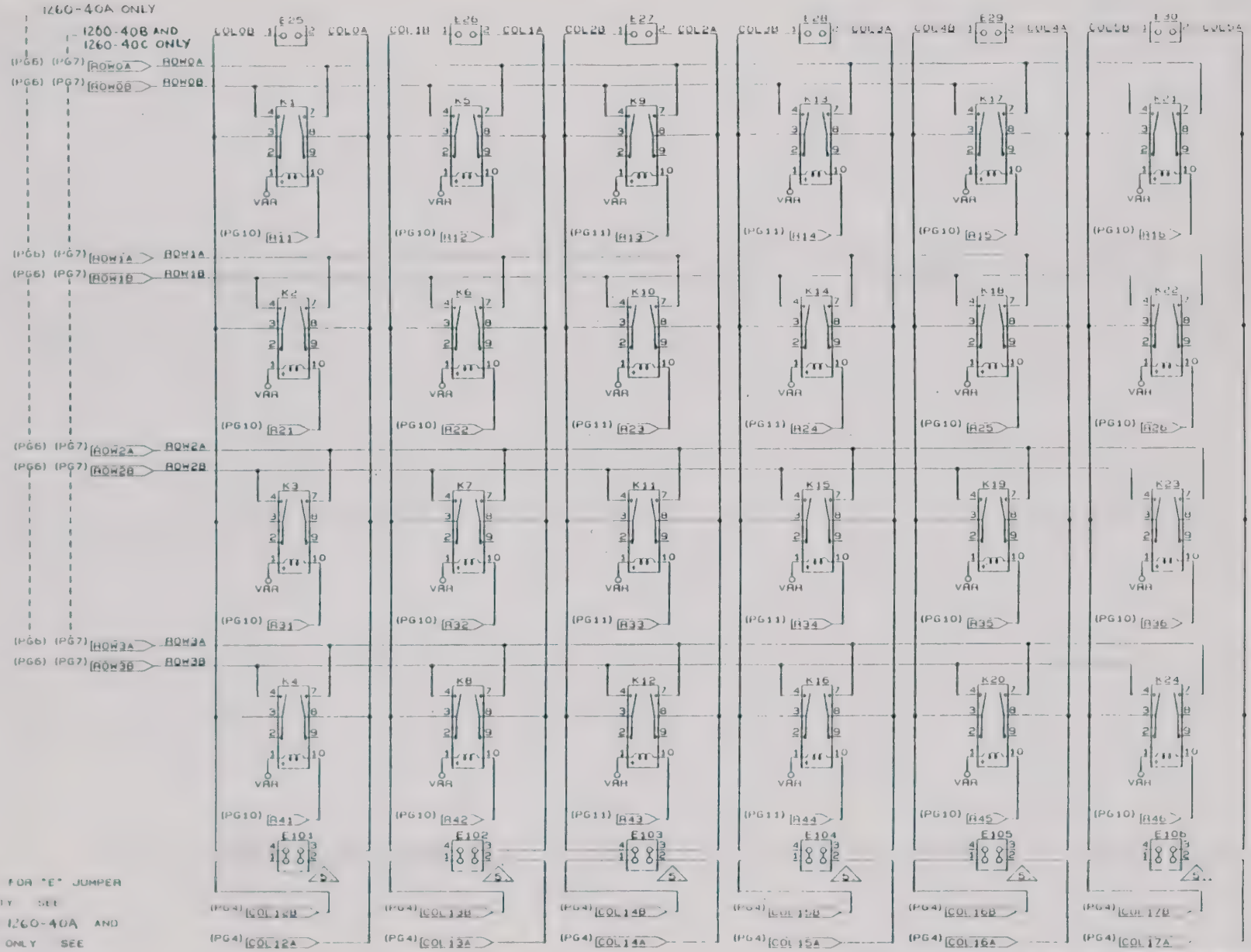

NOTE: FOR "E" JUMPER CONNECTIVITY SEE PAGE 8 FOR 1260-40A AND 1260-40C ONLY SEE PAGE 9 FOR 1260-40B ONLY

SIZE	CODE IDENT NO	DOCUMENT NO	REV
B	21793	431914	C
SCALE		SHEET 2 OF 19	

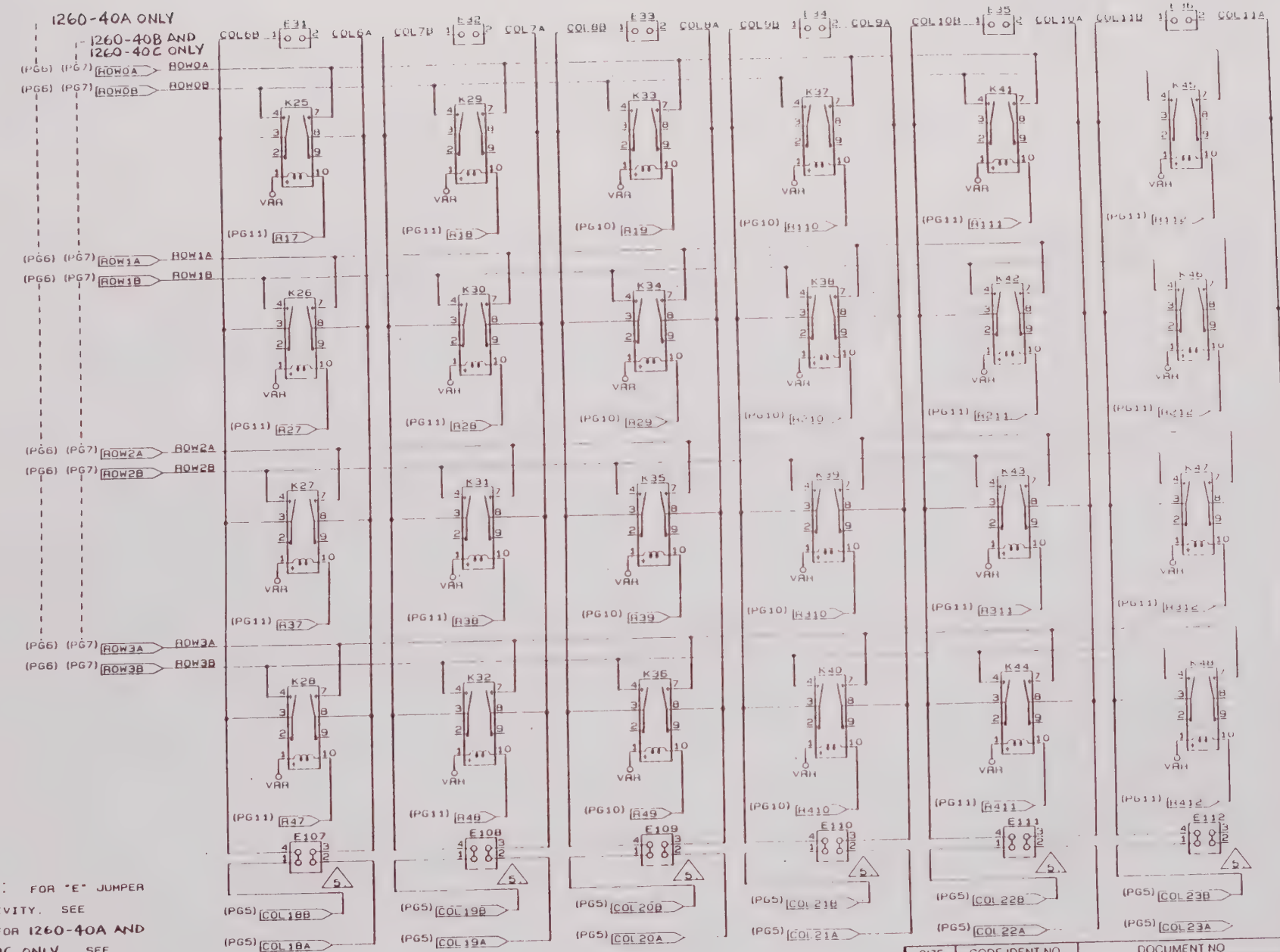

NOTE: FOR "E" JUMPER CONNECTIVITY. SEE PAGE 8 FOR 1260-40A AND 1260-40C ONLY. SEE PAGE 9 FOR 1260-40B ONLY.

SIZE	CODE IDENT NO	DOCUMENT NO	REV
B	21793	431914	C
SCALE		SHEET 3 OF 19	

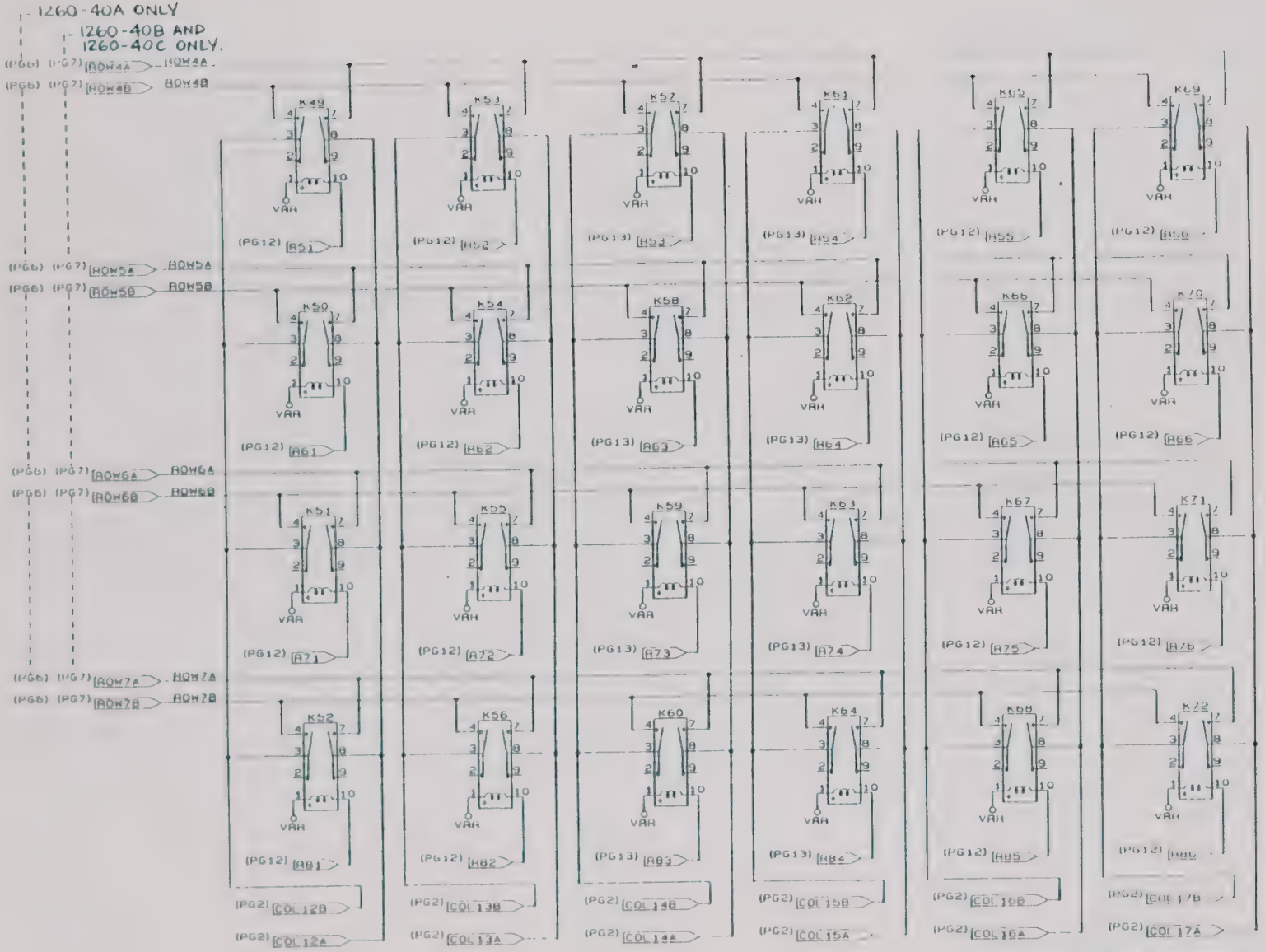

SIZE	CODE IDENT NO	DOCUMENT NO	REV
B	21793	431914	C
SCALE		SHEET 4 OF 19	

1260-40A ONLY

1260-40B AND 1260-40C ONLY.

SIZE	CODE IDENT NO	DOCUMENT NO	REV
B	21793	431914	C
SCALE		SHEET 5 OF 19	

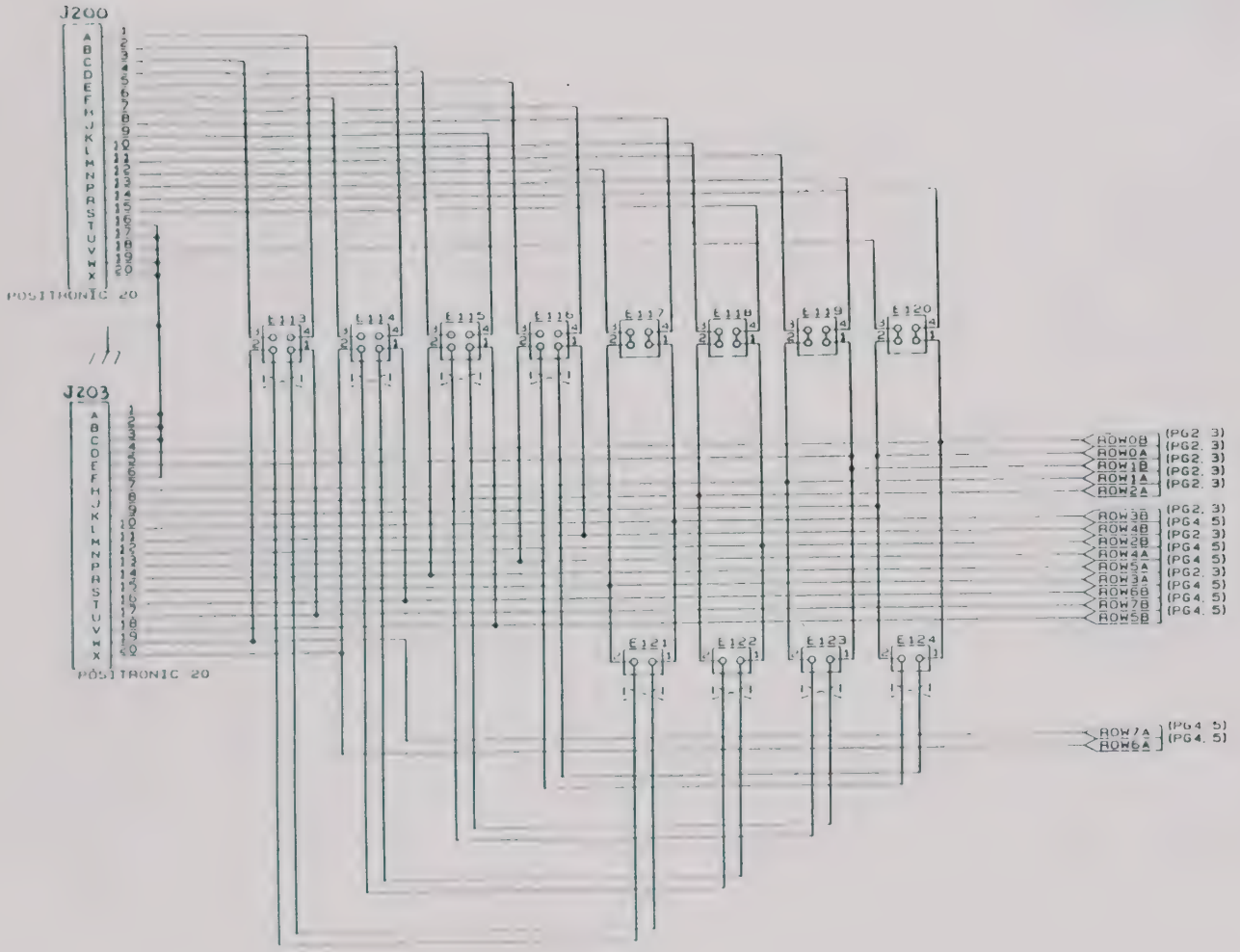

1260-40A ONLY

SIZE	CODE IDENT NO	DOCUMENT NO	REV
B	21793	431914	C
SCALE ———		SHEET 6 OF 19	

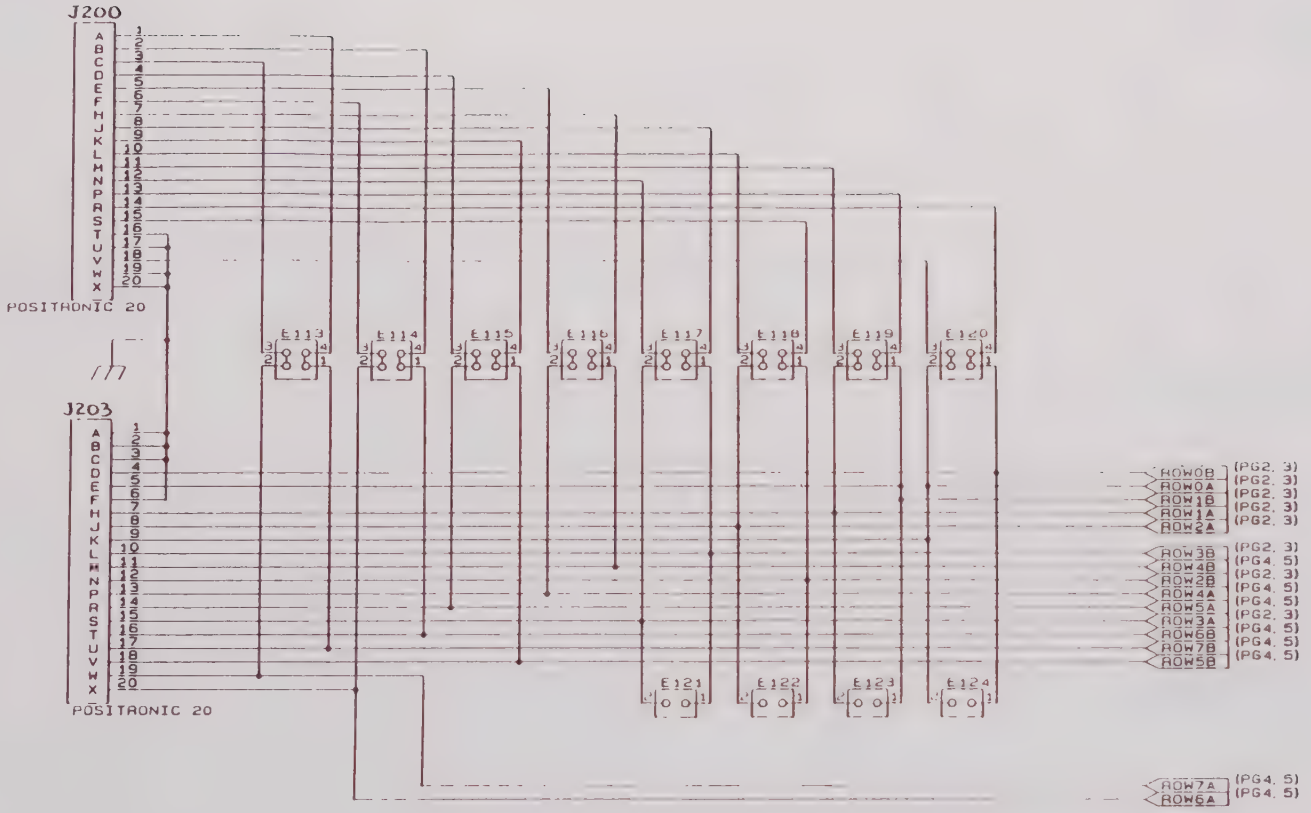

1260-40B AND 1260-40C ONLY

SIZE	CODE IDENT NO	DOCUMENT NO	REV
B	21793	431914	C
SCALE		SHEET 7 OF 19	

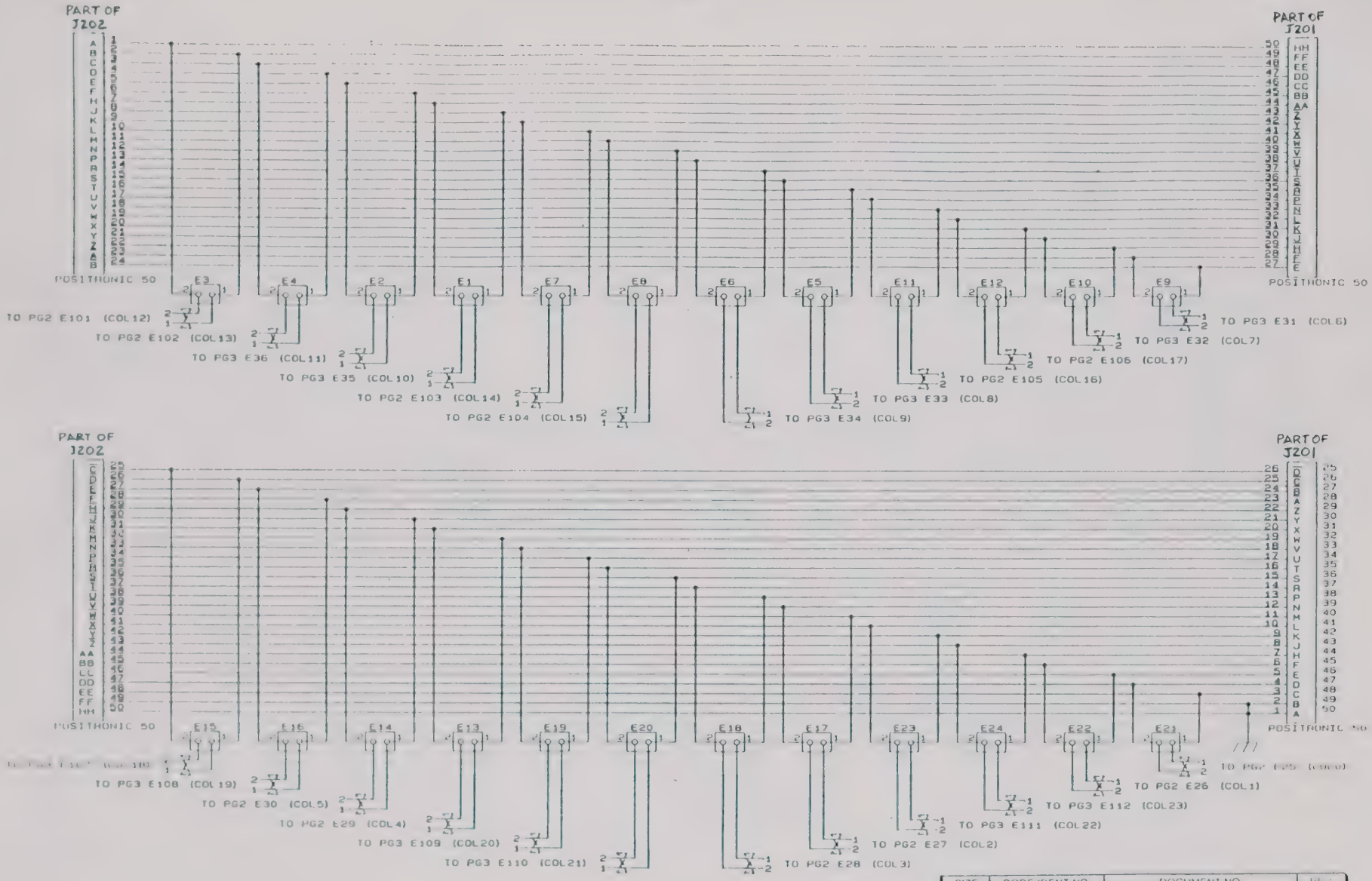

1260-40A AND 1260-40C ONLY

SIZE	CODE IDENT NO	DOCUMENT NO	REV
B	21793	431914	C
SCALE		SHEET 8 OF 19	

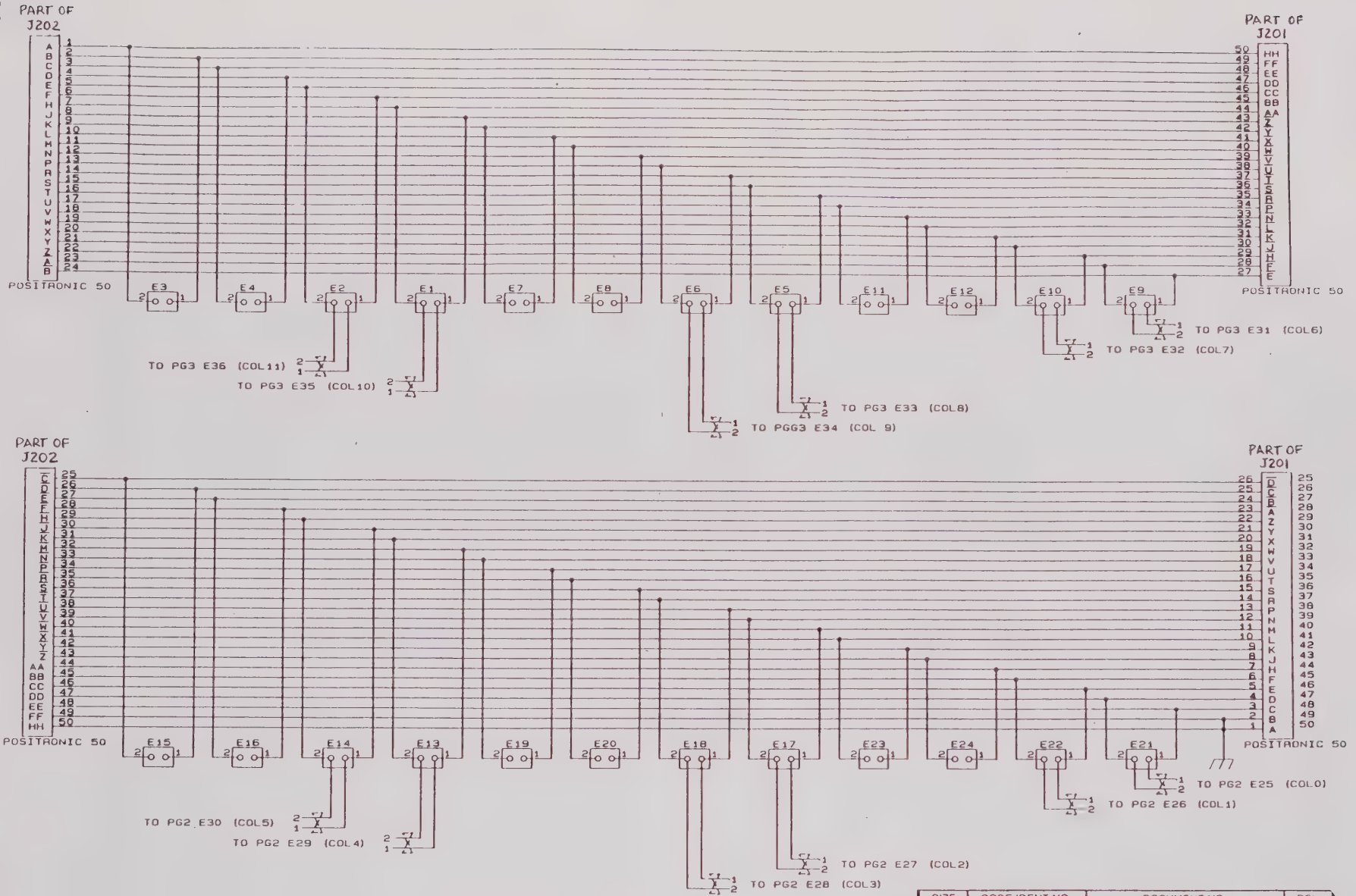

1260-40B ONLY

SIZE	CODE IDENT NO	DOCUMENT NO	REV
B	21793	431914	C
SCALE		SHEET 9 OF 19	

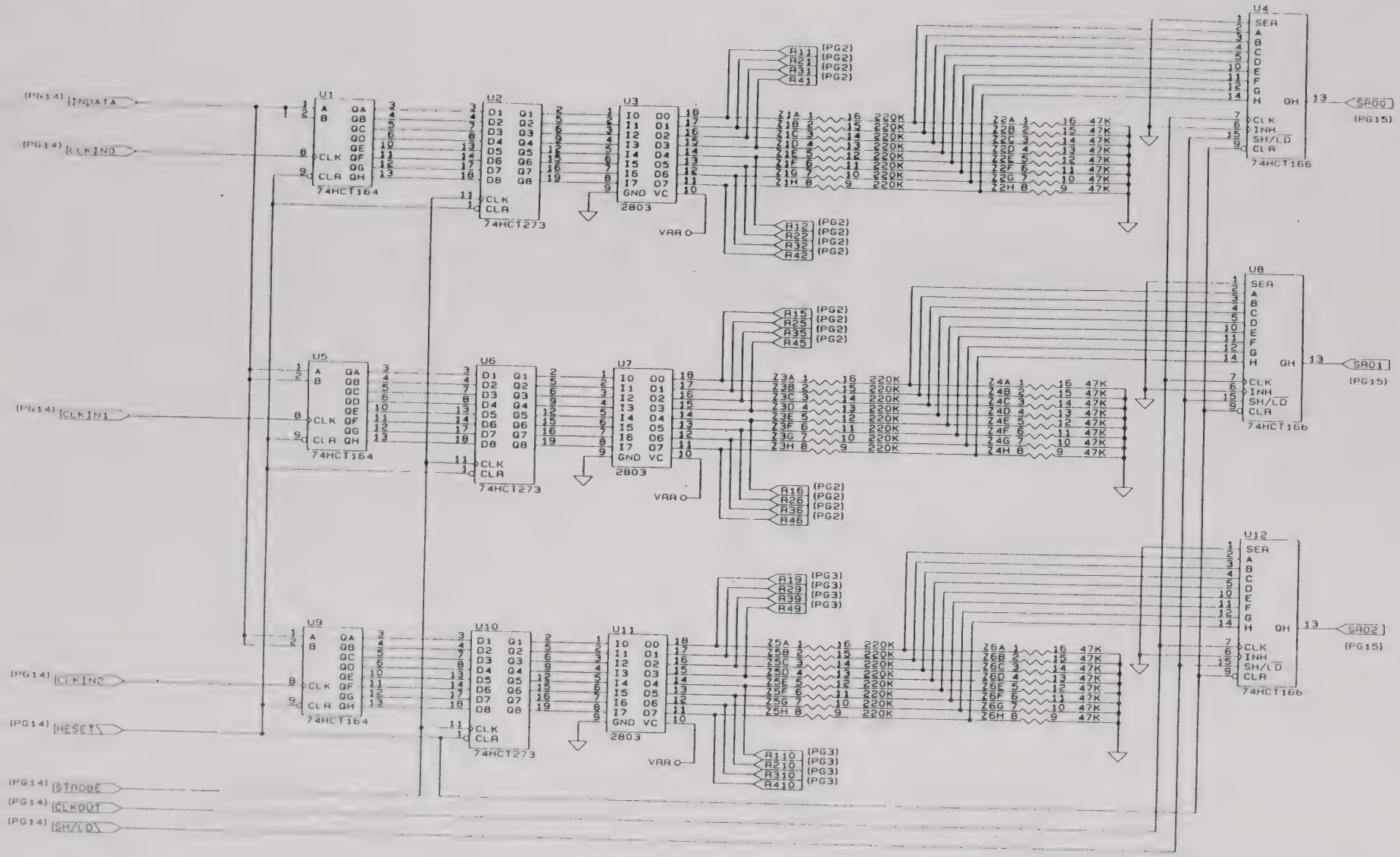

SIZE	CODE IDENT NO	DOCUMENT NO	REV
B	21793	431914	C
SCALE		SHEET 10 OF 19	

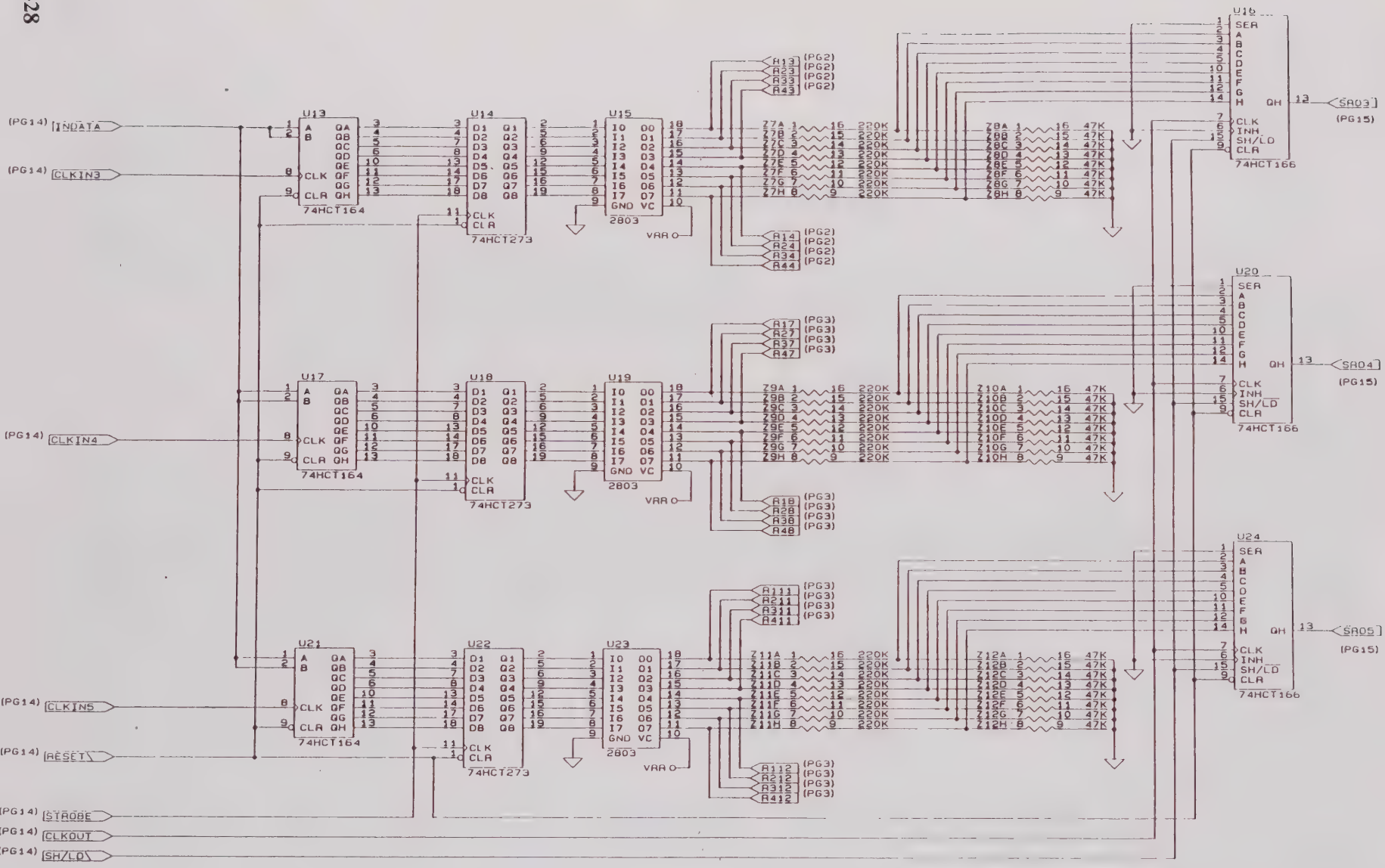

SIZE	CODE IDENT NO	DOCUMENT NO	REV
B	21793	431914	C
SCALE		SHEET 11 OF 19	

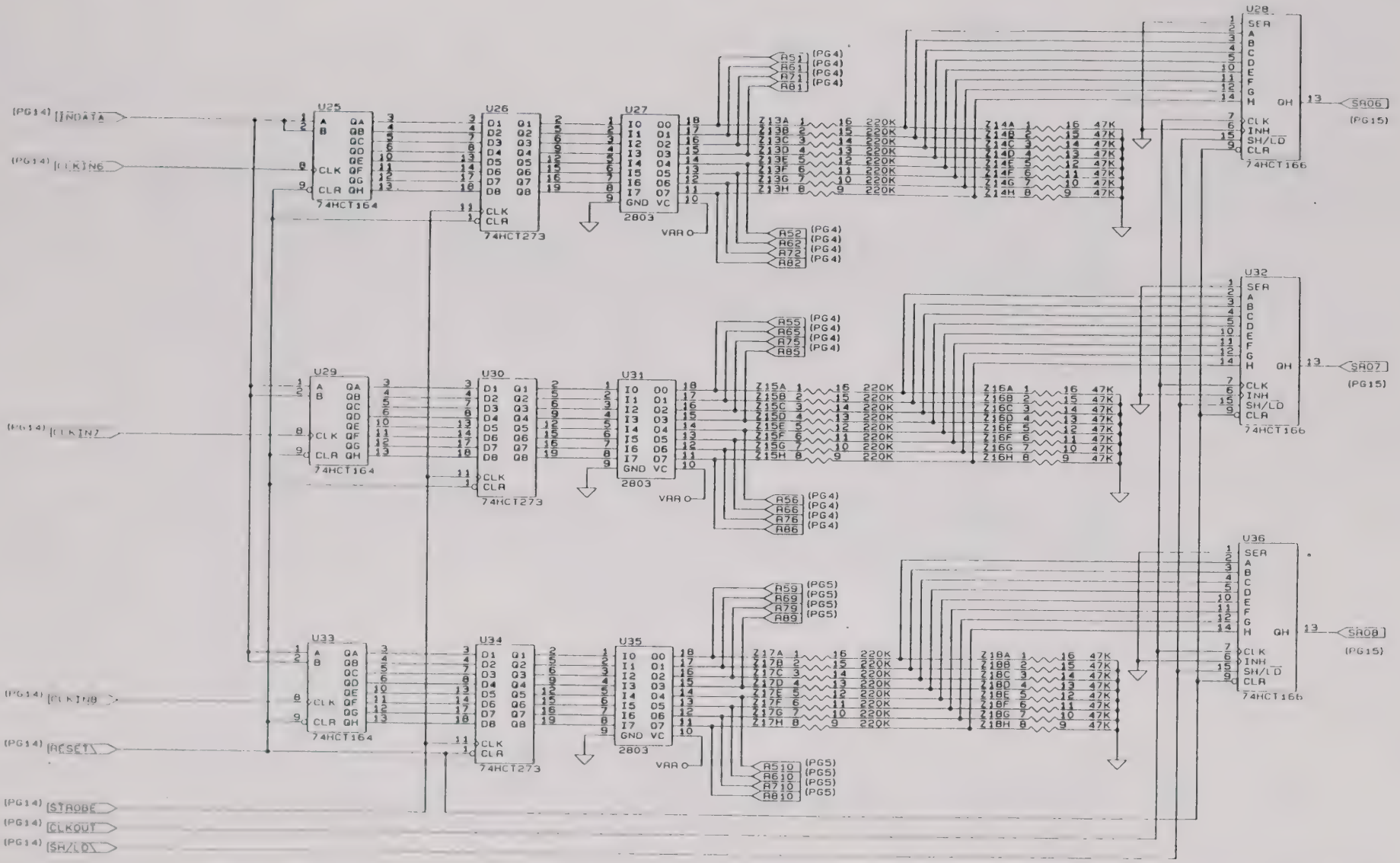

SIZE	CODE IDENT NO	DOCUMENT NO	REV
B	21793	431914	C
SCALE		SHEET 12 OF 19	

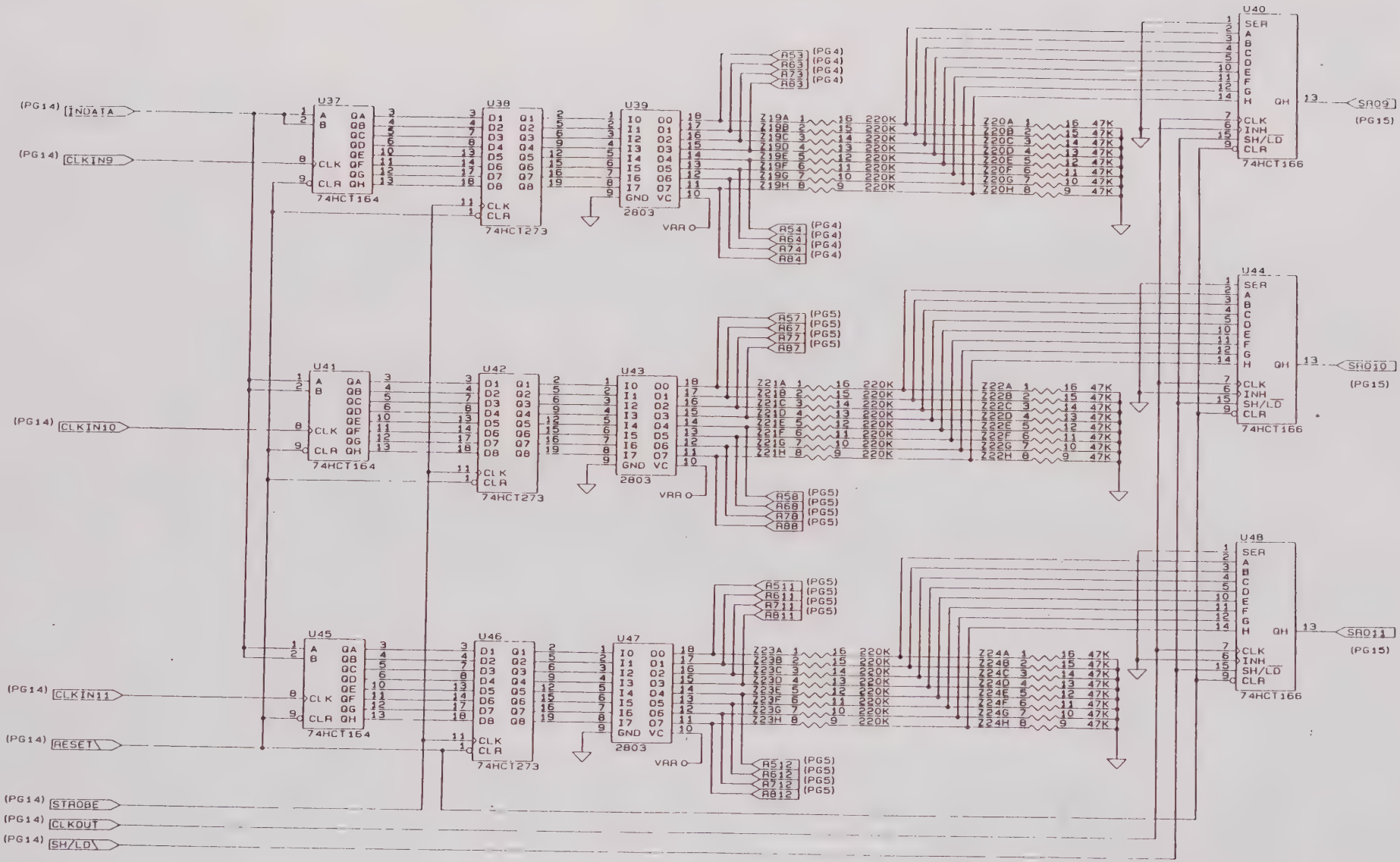

SIZE	CODE IDENT NO	DOCUMENT NO	REV
B	21793	431914	C
SCALE		SHEET 13 OF 19	

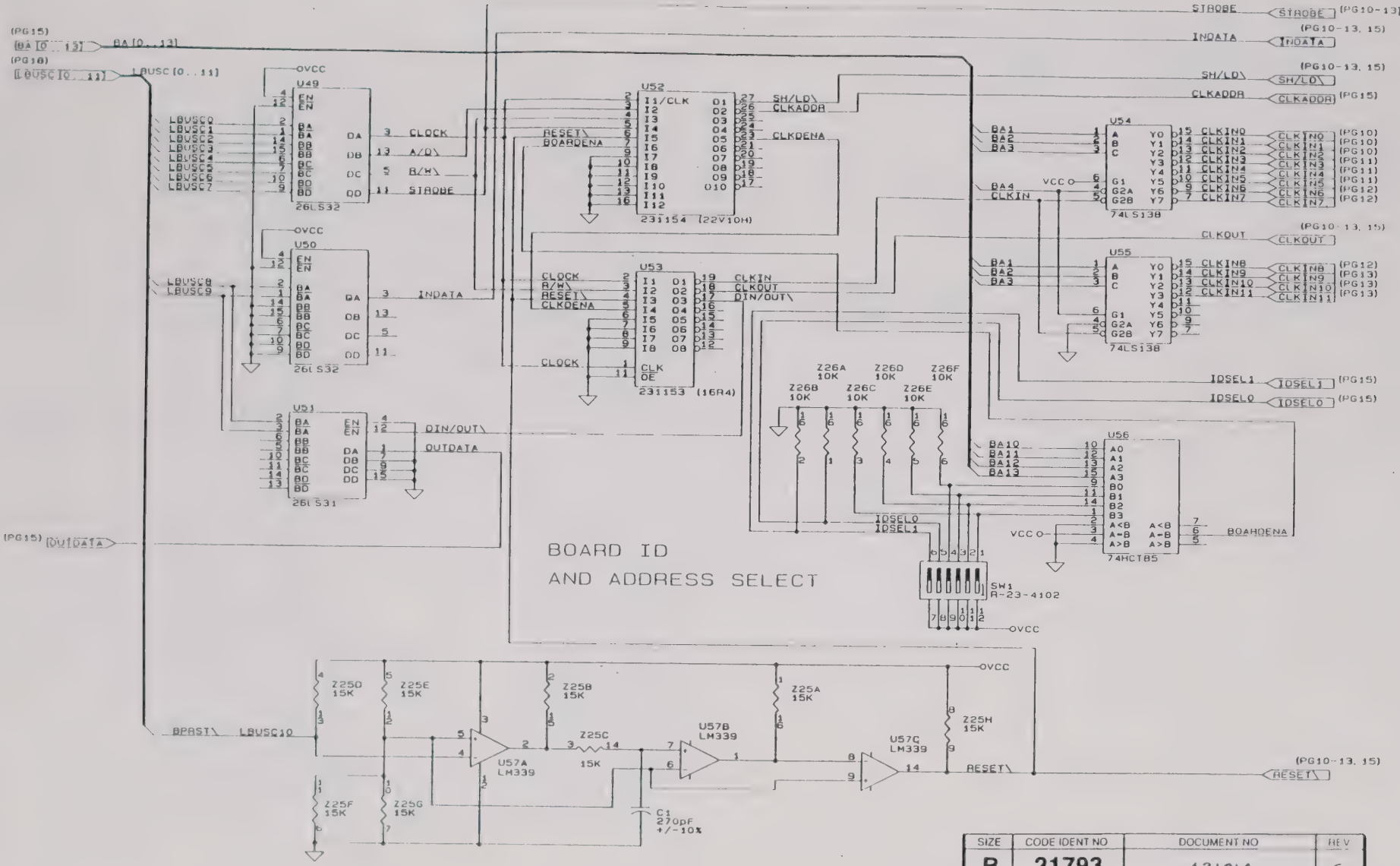

SIZE	CODE IDENT NO	DOCUMENT NO	REV
B	21793	431914	C
SCALE		SHEET 14 OF 19	

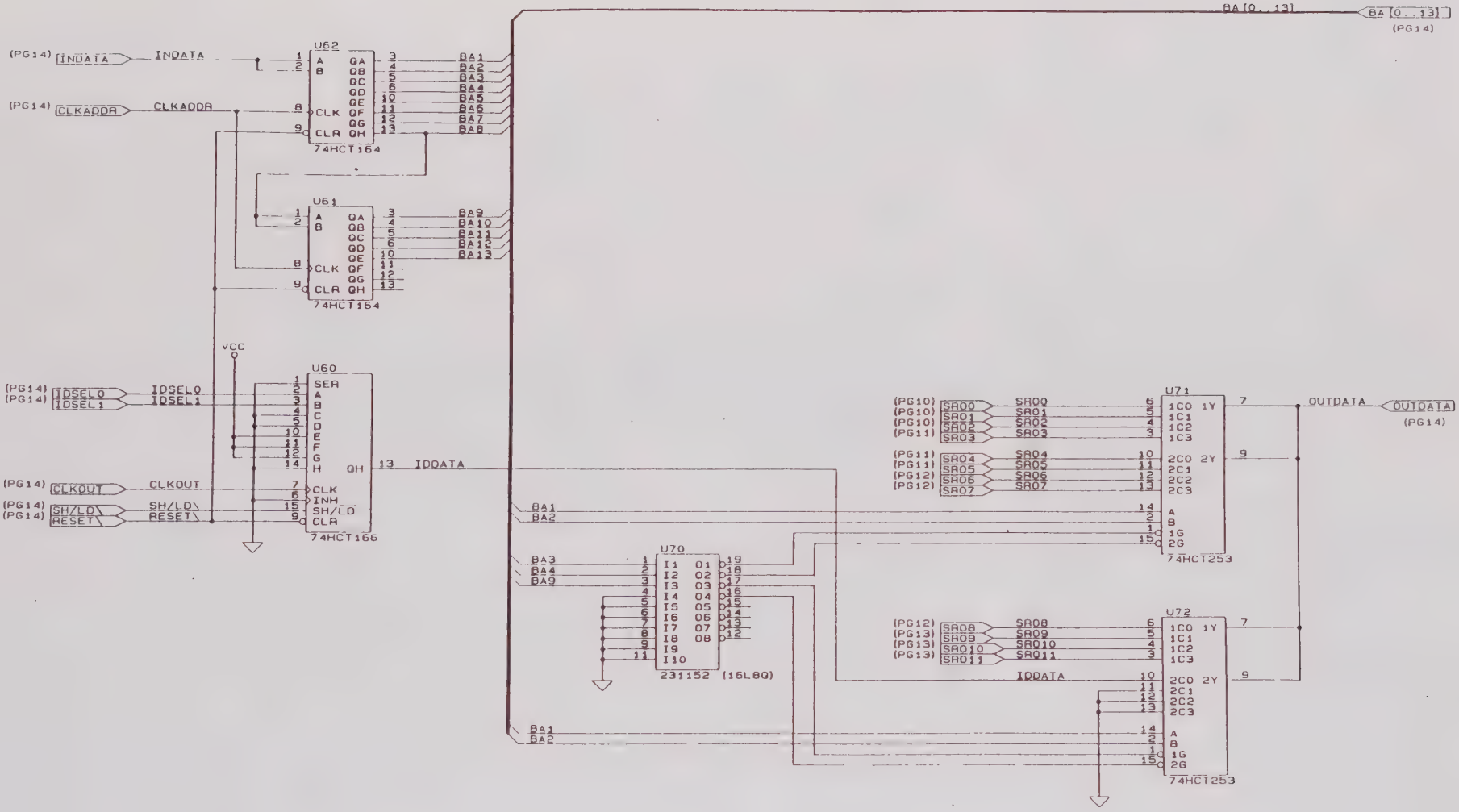

SIZE	CODE IDENT NO	DOCUMENT NO	REV
B	21793	431914	C
SCALE		SHEET 15 OF 19	

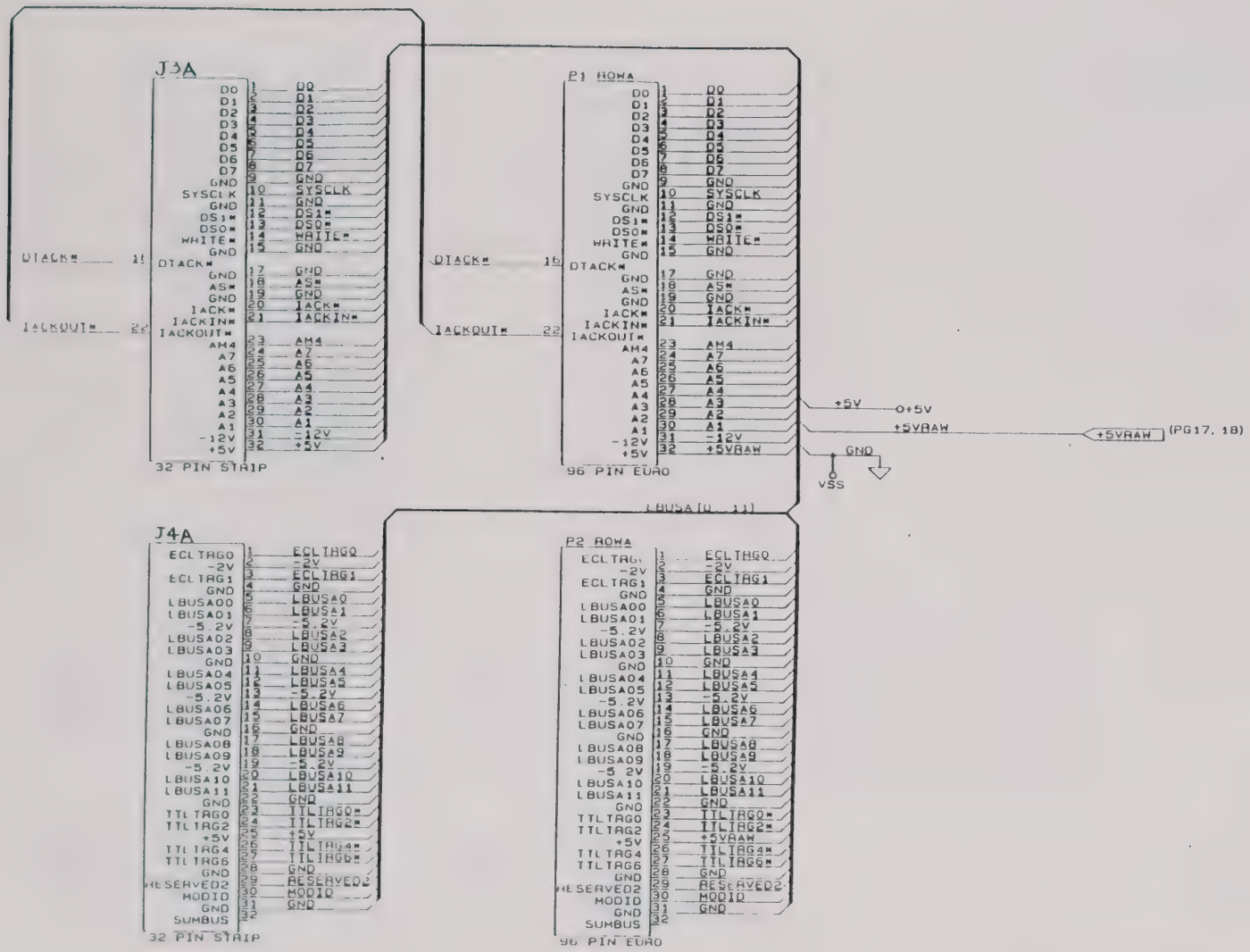

SIZE	CODE IDENT NO	DOCUMENT NO	REV
B	21793	431914	C
SCALE		SHEET 16 OF 19	

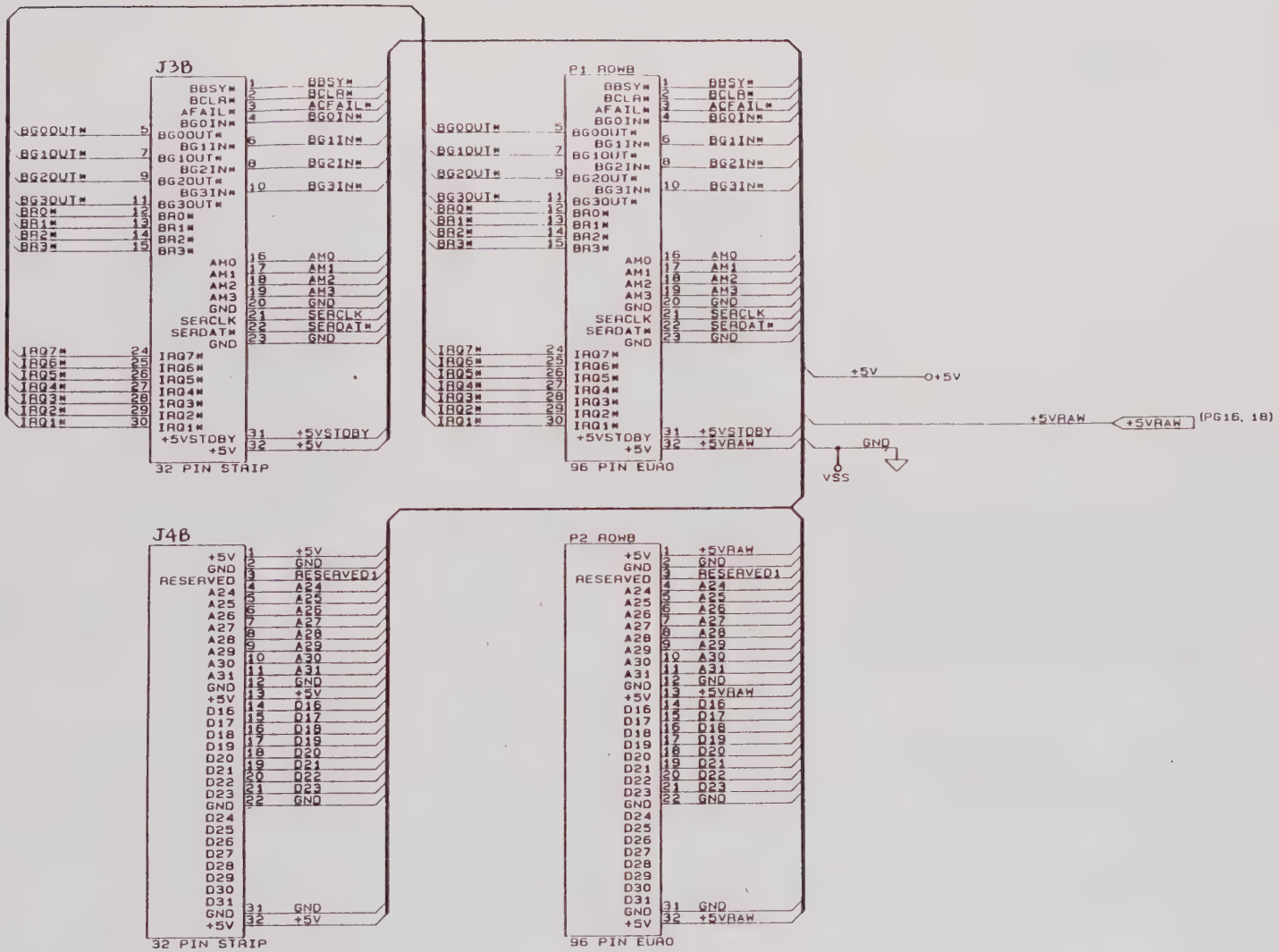

SIZE	CODE IDENT NO	DOCUMENT NO	REV
B	21793	431914	C
SCALE		SHEET 17 OF 19	

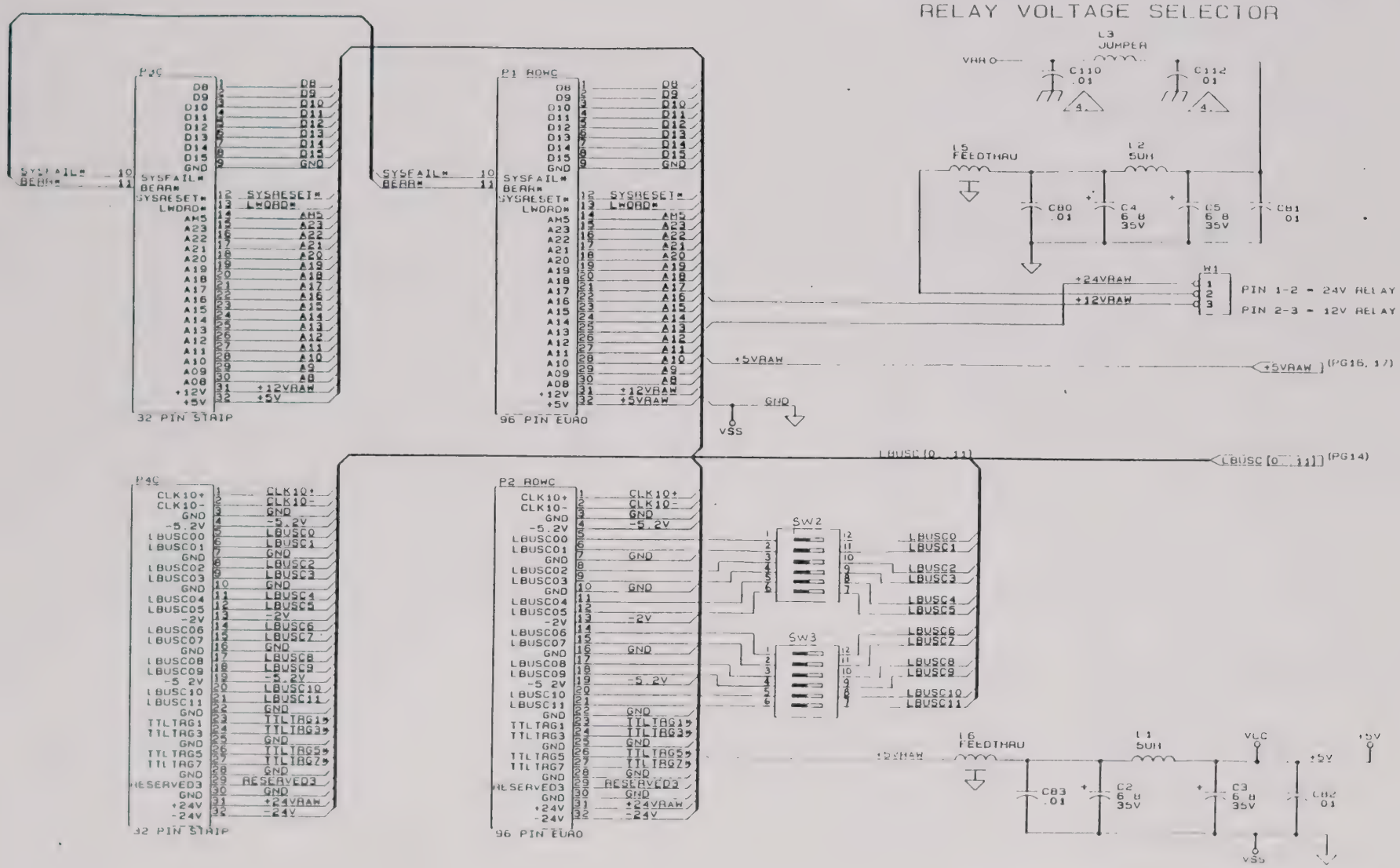

SIZE	CODE IDENT NO	DOCUMENT NO	REV
B	21793	431914	C
SCALE		SHEET 18 OF 19	

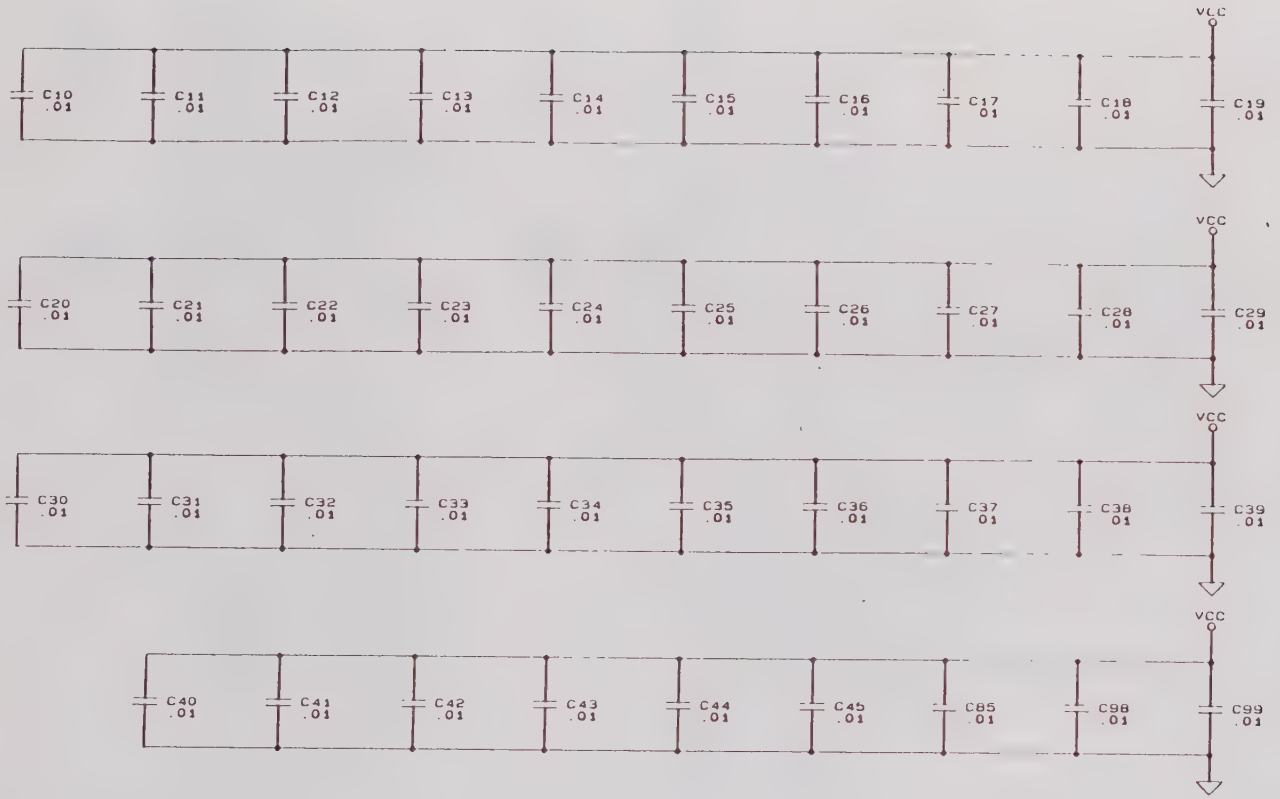

SIZE	CODE IDENT NO	DOCUMENT NO	REV
B	21793	431914	C
SCALE		SHEET 19 OF 19	

404775-001 FINAL ASSY., 1260-40A

REF DESIG	RACAL-DANA P/N	DESCRIPTION	FSC	MANUFACTURER'S P/N
{1}1	401914	PCB ASSY., 1260-40	21793	401914
{4}1	455446	SHIELD, SIDE PANEL, TOP	21793	455446
{5}1	455446-001	SHIELD, SIDE, TOP, L.H.	21793	455446-001
{6}1	455447	SHIELD, SIDE PANEL, BOTTOM	21793	455447
{7}1	455447-001	SHIELD, SIDE, BOTTOM, L.H.	21793	455447-001
{8}1	455499-001	PANEL, FRONT, 1260-40	21793	455499-001
{9}1	455501	COVER, TOP, 1260-40	21793	455501
{10}1	455502	COVER, BOTTOM, 1260-40	21793	455502
{11}1	455521	BRACKET, FRONT	21793	455521
{14}2	611264	HANDLE, EXTRACTOR, BOTTOM	62559	20817-327
{15}2	611265	HANDLE, EXTRACTOR, TOP	62559	20817-328
{18}10	615044	SCREW, PPH, 4-40 X .375	-	-
{19}4	615049	SCREW, PPH, 4-40 X .875	-	-
{20}14	615512	SCREW, PFH, 2-56X.188	-	-
{21}14	617127	WASHER, LOCK, #4, LIGHT SERIES	-	-
{24}1	611266	MOUNTING HARDWARE, HANDLE	62559	21100-745
{25}1	921148	LABEL SET, VXI-VME	21793	921148
{27}1	921059	LABEL, CAUTION, STATIC	21793	921059
{28}1	920710	LABEL, IDENIFICATION	21793	920710
{29}1	404937	SHIPPING KIT, 1260-40	21793	404937
{30}A/R	S00022	WIRE, BARE COPPER/TIN, 22 GA	21793	S00022
{31}A/R	S00132	WIRE, TEFLON TWISTED PR, 24GA BLK/WHT	-	-

404937 SHIPPING KIT, 1260-40

REF DESIG	RACAL-DANA P/N	DESCRIPTION	FSC	MANUFACTURER'S P/N
{3}2	455540	KEY, LOCKOUT, TTL, A/C	21793	455540
{4}2	455541	KEY, LOCKOUT, TTL, A/C	21793	455541
{5}2	455542	KEY, LOCKOUT, TTL, A/C	21793	455542
{7}2	601855-050	CONNECTOR, SGMC, CABLE PLUG	21793	601855-050
{8}2	601855-020	CONNECTOR, SGMC, CABLE PLUG	21793	601855-020
{9}140	601857	CONTACT, SGMC, MALE	28198	M5422N
{11}3	615014	SCREW, PPH, 2-56 X .250	-	-

404775-002 FINAL ASSY., 1260-40B

REF DESIG	RACAL-DANA P/N	DESCRIPTION	FSC	MANUFACTURER'S P/N
{1}1	401914	PCB ASSY., 1260-40	21793	401914
{4}1	455446	SHIELD, SIDE PANEL, TOP	21793	455446
{5}1	455446-001	SHIELD, SIDE, TOP, L.H.	21793	455446-001
{6}1	455447	SHIELD, SIDE PANEL, BOTTOM	21793	455447
{7}1	455447-001	SHIELD, SIDE, BOTTOM, L.H.	21793	455447-001
{8}1	455499-001	PANEL, FRONT, 1260-40	21793	455499-001
{9}1	455501	COVER, TOP, 1260-40	21793	455501
{10}1	455502	COVER, BOTTOM, 1260-40	21793	455502
{11}1	455521	BRACKET, FRONT	21793	455521
{14}2	611264	HANDLE, EXTRACTOR, BOTTOM	62559	20817-327
{15}2	611265	HANDLE, EXTRACTOR, TOP	62559	20817-328
{18}10	615044	SCREW, PPH, 4-40 X .375	-	-
{19}4	615049	SCREW, PPH, 4-40 X .875	-	-
{20}14	615512	SCREW, PFH, 2-56X.188	-	-
{21}14	617127	WASHER, LOCK, #4, LIGHT SERIES	-	-
{24}1	611266	MOUNTING HARDWARE, HANDLE	62559	21100-745
{25}1	921148	LABEL SET, VXI-VME	21793	921148
{27}1	921059	LABEL, CAUTION, STATIC	21793	921059
{28}1	920710	LABEL, IDENIFICATION	21793	920710
{29}1	404937	SHIPPING KIT, 1260-40	21793	404937
{30}A/R	500022	WIRE, BARE COPPER/TIN, 22 GA	21793	500022
{31}A/R	500132	WIRE, TEFLON TWISTED PR, 24GA BLK/WHT	-	-

404775-003 FINAL ASSY., 1260-40C

REF DESIG	RACAL-DANA P/N	DESCRIPTION	FSC	MANUFACTURER'S P/N
{1}1	401914	PCB ASSY., 1260-40	21793	401914
{4}1	455446	SHIELD, SIDE PANEL, TOP	21793	455446
{5}1	455446-001	SHIELD, SIDE, TOP, L.H.	21793	455446-001
{6}1	455447	SHIELD, SIDE PANEL, BOTTOM	21793	455447
{7}1	455447-001	SHIELD, SIDE, BOTTOM, L.H.	21793	455447-001
{8}1	455499-001	PANEL, FRONT, 1260-40	21793	455499-001
{9}1	455501	COVER, TOP, 1260-40	21793	455501
{10}1	455502	COVER, BOTTOM, 1260-40	21793	455502
{11}1	455521	BRACKET, FRONT	21793	455521
{14}2	611264	HANDLE, EXTRACTOR, BOTTOM	62559	20817-327
{15}2	611265	HANDLE, EXTRACTOR, TOP	62559	20817-328
{18}10	615044	SCREW, PPH, 4-40 X .375	-	-
{19}4	615049	SCREW, PPH, 4-40 X .875	-	-
{20}14	615512	SCREW, PFH, 2-56X.188	-	-
{21}14	617127	WASHER, LOCK, #4, LIGHT SERIES	-	-
{24}1	611266	MOUNTING HARDWARE, HANDLE	62559	21100-745
{25}1	921148	LABEL SET, VXI-VME	21793	921148
{27}1	921059	LABEL, CAUTION, STATIC	21793	921059
{28}1	920710	LABEL, IDENIFICATION	21793	920710
{29}1	404937	SHIPPING KIT, 1260-40	21793	404937
{30}A/R	500022	WIRE, BARE COPPER/TIN, 22 GA	21793	500022
{31}A/R	500132	WIRE, TEFLON TWISTED PR, 24GA BLK/WHT	-	-

401914 PCB ASSY., 1260-40

REF DESIG	RACAL-DANA P/N	DESCRIPTION	FSC	MANUFACTURER'S P/N
C1	130177	CAPACITOR, CHIP, SMD, 270PF	95275	VJ1206A271KXAMT
C2	110126	CAP, TANTA, 6.8UF, 35V, 20 PERCENT	05397	T355F685M035A5
C3	110126	CAP, TANTA, 6.8UF, 35V, 20 PERCENT	05397	T355F685M035A5
C4	110126	CAP, TANTA, 6.8UF, 35V, 20 PERCENT	05397	T355F685M035A5
C5	110126	CAP, TANTA, 6.8UF, 35V, 20 PERCENT	05397	T355F685M035A5
C10-C45	R-21-1801	CAP, CHIP, 10 NF	95275	VJ1206Y103MF
C80	R-21-1801	CAP, CHIP, 10 NF	95275	VJ1206Y103MF
C81	R-21-1801	CAP, CHIP, 10 NF	95275	VJ1206Y103MF
C82	R-21-1801	CAP, CHIP, 10 NF	95275	VJ1206Y103MF
C83	R-21-1801	CAP, CHIP, 10 NF	95275	VJ1206Y103MF
C85	R-21-1801	CAP, CHIP, 10 NF	95275	VJ1206Y103MF
C98	R-21-1801	CAP, CHIP, 10 NF	95275	VJ1206Y103MF
C99	R-21-1801	CAP, CHIP, 10 NF	95275	VJ1206Y103MF
J3	601925	CONNECTOR, PCB, RECPT, 96-PIN	52072	618008
J4	601925	CONNECTOR, PCB, RECPT, 96-PIN	52072	618008
J200	601856-020	CONNECTOR, SMPL, PCB RECEPT	21793	601856-020
J201	601856-050	CONNECTOR, SMPL, PCB RECEPT	21793	601856-050
J202	601856-050	CONNECTOR, SMPL, PCB RECEPT	21793	601856-050
J203	601856-020	CONNECTOR, SMPL, PCB RECEPT	21793	601856-020
K1-K96	310197	RELAY, 2 FORM C	61529	TO2E-24V
L1	310193	CHOKE, SHIELDED, 5UH	91637	IH-5-5-10
L2	310193	CHOKE, SHIELDED, 5UH	91637	IH-5-5-10
L3	600245	JUMPER, INSULATED	52210	L-2007-1
L5	100164	CAP, FEED-THRU,800PF, 50V	00779	842448-2
L6	100164	CAP, FEED-THRU,800PF, 50V	00779	842448-2
P1	601675	CONNECTOR, EUROCARD TYPE C, 96-PIN	00779	532505-1
P2	601675	CONNECTOR, EUROCARD TYPE C, 96-PIN	00779	532505-1
SW1	R-23-4102	SWITCH,6-WAY,SINGLE THROW	3V841	206-006ST
SW2	601915	SWITCH, DIP, 6 POS, SMD	91506	ADF-06ST
SW3	601915	SWITCH, DIP, 6 POS, SMD	91506	ADF-06ST
U1	231131	IC, DIGITAL, SHIFT REGISTER	18324	PC74HCT164D
U2	231130	IC, DIGITAL, FLIP FLOP	18324	PC74HC273
U3	231098	IC, SOIC TRANSISTOR	56289	ULN-2803LW
U4	231120	IC, 8-BIT, PARALLEL/SERIAL OUT S.R.	18324	74HCT166D
U5	231131	IC, DIGITAL, SHIFT REGISTER	18324	PC74HCT164D
U6	231130	IC, DIGITAL, FLIP FLOP	18324	PC74HC273
U7	231098	IC, SOIC TRANSISTOR	56289	ULN-2803LW
U8	231120	IC, 8-BIT, PARALLEL/SERIAL OUT S.R.	18324	74HCT166D
U9	231131	IC, DIGITAL, SHIFT REGISTER	18324	PC74HCT164D
U10	231130	IC, DIGITAL, FLIP FLOP	18324	PC74HC273
U11	231098	IC, SOIC TRANSISTOR	56289	ULN-2803LW
U12	231120	IC, 8-BIT, PARALLEL/SERIAL OUT S.R.	18324	74HCT166D
U13	231131	IC, DIGITAL, SHIFT REGISTER	18324	PC74HCT164D
U14	231130	IC, DIGITAL, FLIP FLOP	18324	PC74HC273
U15	231098	IC, SOIC TRANSISTOR	56289	ULN-2803LW
U16	231120	IC, 8-BIT, PARALLEL/SERIAL OUT S.R.	18324	74HCT166D
U17	231131	IC, DIGITAL, SHIFT REGISTER	18324	PC74HCT164D
U18	231130	IC, DIGITAL, FLIP FLOP	18324	PC74HC273
U19	231098	IC, SOIC TRANSISTOR	56289	ULN-2803LW
U20	231120	IC, 8-BIT, PARALLEL/SERIAL OUT S.R.	18324	74HCT166D
U21	231131	IC, DIGITAL, SHIFT REGISTER	18324	PC74HCT164D
U22	231130	IC, DIGITAL, FLIP FLOP	18324	PC74HC273
U23	231098	IC, SOIC TRANSISTOR	56289	ULN-2803LW
U24	231120	IC, 8-BIT, PARALLEL/SERIAL OUT S.R.	18324	74HCT166D
U25	231131	IC, DIGITAL, SHIFT REGISTER	18324	PC74HCT164D
U26	231130	IC, DIGITAL, FLIP FLOP	18324	PC74HC273
U27	231098	IC, SOIC TRANSISTOR	56289	ULN-2803LW
U28	231120	IC, 8-BIT, PARALLEL/SERIAL OUT S.R.	18324	74HCT166D
U29	231131	IC, DIGITAL, SHIFT REGISTER	18324	PC74HCT164D
U30	231130	IC, DIGITAL, FLIP FLOP	18324	PC74HC273
U31	231098	IC, SOIC TRANSISTOR	56289	ULN-2803LW

401914 PCB ASSY., 1260-40

REF DESIG	RACAL-DANA P/N	DESCRIPTION	FSC	MANUFACTURER'S P/N
U32	231120	IC, 8-BIT, PARALLEL/SERIAL OUT S.R.	18324	74HCT166D
U33	231131	IC, DIGITAL, SHIFT REGISTER	18324	PC74HCT164D
U34	231130	IC, DIGITAL, FLIP FLOP	18324	PC74HC273
U35	231098	IC, SOIC TRANSISTOR	56289	ULN-2803LW
U36	231120	IC, 8-BIT, PARALLEL/SERIAL OUT S.R.	18324	74HCT166D
U37	231131	IC, DIGITAL, SHIFT REGISTER	18324	PC74HCT164D
U38	231130	IC, DIGITAL, FLIP FLOP	18324	PC74HC273
U39	231098	IC, SOIC TRANSISTOR	56289	ULN-2803LW
U40	231120	IC, 8-BIT, PARALLEL/SERIAL OUT S.R.	18324	74HCT166D
U41	231131	IC, DIGITAL, SHIFT REGISTER	18324	PC74HCT164D
U42	231130	IC, DIGITAL, FLIP FLOP	18324	PC74HC273
U43	231098	IC, SOIC TRANSISTOR	56289	ULN-2803LW
U44	231120	IC, 8-BIT, PARALLEL/SERIAL OUT S.R.	18324	74HCT166D
U45	231131	IC, DIGITAL, SHIFT REGISTER	18324	PC74HCT164D
U46	231130	IC, DIGITAL, FLIP FLOP	18324	PC74HC273
U47	231098	IC, SOIC TRANSISTOR	56289	ULN-2803LW
U48	231120	IC, 8-BIT, PARALLEL/SERIAL OUT S.R.	18324	74HCT166D
U49	231096	IC, QUAD DIFF RECEIVER	01295	AM26LS32ACD
U50	231096	IC, QUAD DIFF RECEIVER	01295	AM26LS32ACD
U51	231125	IC, DIGITAL, LINE DRIVER	27014	DS26LS31MN
U52	231154	IC, PROGRAMMED PLA	21793	231154
U53	231153	IC, PROGRAMMED PLA	21793	231153
U54	231094	IC, DEMUX DECODER	18324	N74LS138D
U55	231094	IC, DEMUX DECODER	18324	N74LS138D
U56	231135	IC, DIGITAL, 4-BIT COMPARATOR	18324	PC74HCT85D
U57	231093	IC, QUAD COMPARATOR	04713	LM339D
U60	231120	IC, 8-BIT, PARALLEL/SERIAL OUT S.R.	18324	74HCT166D
U61	231131	IC, DIGITAL, SHIFT REGISTER	18324	PC74HCT164D
U62	231131	IC, DIGITAL, SHIFT REGISTER	18324	PC74HCT164D
U70	231152	IC, PROGRAMMED PIA	21793	231152
U71	231147	IC, MULTIPLEXER	04713	74HC253D
U72	231147	IC, MULTIPLEXER	04713	74HC253D
Z1	080119	RES NETWORK, 220K	91637	SOMC-1603-224K
Z2	080117	RES NETWORK, 16P8R, 47K	73138	628-AL-473J
Z3	080119	RES NETWORK, 220K	91637	SOMC-1603-224K
Z4	080117	RES NETWORK, 16P8R, 47K	73138	628-AL-473J
Z5	080119	RES NETWORK, 220K	91637	SOMC-1603-224K
Z6	080117	RES NETWORK, 16P8R, 47K	73138	628-AL-473J
Z7	080119	RES NETWORK, 220K	91637	SOMC-1603-224K
Z8	080117	RES NETWORK, 16P8R, 47K	73138	628-AL-473J
Z9	080119	RES NETWORK, 220K	91637	SOMC-1603-224K
Z10	080117	RES NETWORK, 16P8R, 47K	73138	628-AL-473J
Z11	080119	RES NETWORK, 220K	91637	SOMC-1603-224K
Z12	080117	RES NETWORK, 16P8R, 47K	73138	628-AL-473J
Z13	080119	RES NETWORK, 220K	91637	SOMC-1603-224K
Z14	080117	RES NETWORK, 16P8R, 47K	73138	628-AL-473J
Z15	080119	RES NETWORK, 220K	91637	SOMC-1603-224K
Z16	080117	RES NETWORK, 16P8R, 47K	73138	628-AL-473J
Z17	080119	RES NETWORK, 220K	91637	SOMC-1603-224K
Z18	080117	RES NETWORK, 16P8R, 47K	73138	628-AL-473J
Z19	080119	RES NETWORK, 220K	91637	SOMC-1603-224K
Z20	080117	RES NETWORK, 16P8R, 47K	73138	628-AL-473J
Z21	080119	RES NETWORK, 220K	91637	SOMC-1603-224K
Z22	080117	RES NETWORK, 16P8R, 47K	73138	628-AL-473J
Z23	080119	RES NETWORK, 220K	91637	SOMC-1603-224K
Z24	080117	RES NETWORK, 16P8R, 47K	73138	628-AL-473J
Z25	080114	RES NETWORK, 16P8R, 15K	73138	628-AL-153J

401914 PCB ASSY., 1260-40

REF DESIG	RACAL-DANA P/N	DESCRIPTION	FSC	MANUFACTURER'S P/N
Z26	080120	RES NETWORK, 10K	11236	767-161R10K
{46}1	411914	PCB 1260-14 (UNLOADED)	21793	411914
{50}4	611227	SPACER, PRESS, #4, PCB	46384	KFSE-116-20
{51}8	615013	SCREW, PPF, 2-56 X .125	-	-
{57}1	401951	PCB ASSY, LBUS JUMPER	21793	401951
{59}A/R	500022	WIRE, BARE COPPER/TIN, 22 GA	21793	500022

WIRE LIST

FROM	TO	CONDUCTOR TYPE, GAUGE, COLOR	PART NUMBER	WIRE LENGTH	REFERENCE
E117-1	E117-4	BARE COPPER, 22GA	500022	A/R	BUS
E117-2	E117-3	"	500022	A/R	"
E118-1	E118-4	"	500022	A/R	"
E118-2	E118-3	"	500022	A/R	"
E119-1	E119-4	"	500022	A/R	"
E119-2	E119-3	"	500022	A/R	"
E120-1	E120-4	"	500022	A/R	"
E120-2	E120-3	"	500022	A/R	"
E113-1	E121-1	TEF,STR,24GA, WHT	500132	A/R	TWISTED
E113-2	E121-2	TEF,STR,24GA, BLK	500132	A/R	PAIR
E114-1	E122-1	TEF,STR,24GA, WHT	500132	A/R	TWISTED
E114-2	E122-2	TEF,STR,24GA, BLK	500132	A/R	PAIR
E115-1	E123-1	TEF,STR,24GA, WHT	500132	A/R	TWISTED
E115-2	E123-2	TEF,STR,24GA, BLK	500132	A/R	PAIR
E116-1	E124-1	TEF,STR,24GA, WHT	500132	A/R	TWISTED
E116-2	E124-2	TEF,STR,24GA, BLK	500132	A/R	PAIR
E25-1	E21-1	TEF,STR,24GA,WHT	500132	A/R	TWISTED
E25-2	E21-2	TEF,STR,24GA,BLK	500132	A/R	PAIR
E26-1	E22-1	TEF,STR,24GA,WHT	500132	A/R	TWISTED
E26-2	E22-2	TEF,STR,24GA,BLK	500132	A/R	PAIR

RACAL-DANA Instruments Inc. 4 GOODYEAR, IRVINE, CALIFORNIA 92714

DOCUMENT TITLE	SIZE	CODE IDENT NO	DOCUMENT NO.	REV
FINAL ASSY., 1260-40A	A	21793	404775-001	B
	DRN			

WIRE LIST

FROM	TO	CONDUCTOR TYPE, GAUGE, COLOR	PART NUMBER	WIRE LENGTH	REFERENCE
E27-1	E17-1	TEF,STR,24GA, WHT	500132	A/R	TWISTED
E27-2	E17-2	TEF,STR,24GA, BLK	500132	A/R	PAIR
E28-1	E18-1	TEF,STR,24GA, WHT	500132	A/R	TWISTED
E28-2	E18-2	TEF,STR,24GA, BLK	500132	A/R	PAIR
E29-1	E13-1	TEF,STR,24GA, WHT	500132	A/R	TWISTED
E29-2	E13-2	TEF,STR,24GA, BLK	500132	A/R	PAIR
E30-1	E14-1	TEF,STR,24GA, WHT	500132	A/R	TWISTED
E30-2	E14-2	TEF,STR,24GA, BLK	500132	A/R	PAIR
E31-1	E9-1	TEF,STR,24GA, WHT	500132	A/R	TWISTED
E31-2	E9-2	TEF,STR,24GA, BLK	500132	A/R	PAIR
E32-1	E10-1	TEF,STR,24GA, WHT	500132	A/R	TWISTED
E32-2	E10-2	TEF,STR,24GA, BLK	500132	A/R	PAIR
E33-1	E5-1	TEF,STR,24GA, WHT	500132	A/R	TWISTED
E33-2	E5-2	TEF,STR,24GA, BLK	500132	A/R	PAIR
E34-1	E6-1	TEF,STR,24GA, WHT	500132	A/R	TWISTED
E34-2	E6-2	TEF,STR,24GA, BLK	500132	A/R	PAIR
E35-1	E1-1	TEF,STR,24GA, WHT	500132	A/R	TWISTED
E35-2	E1-2	TEF,STR,24GA, BLK	500132	A/R	PAIR
E36-1	E2-1	TEF,STR,24GA, WHT	500132	A/R	TWISTED
E36-2	E2-2	TEF,STR,24GA, BLK	500132	A/R	PAIR

RACAL-DANA Instruments Inc. 4 GOODYEAR, IRVINE, CALIFORNIA 92714

DOCUMENT TITLE	SIZE	CODE IDENT NO.	DOCUMENT NO.	REV.
FINAL ASSY., 1260-40A	A	21793	404775-001	B
	DRN			

WIRE LIST

FROM	TO	CONDUCTOR TYPE, GAUGE, COLOR	PART NUMBER	WIRE LENGTH	REFERENCE
E101-1	E3-1	TEF,STR,24GA, WHT	500132	A/R	TWISTED PAIR
E101-2	E3-2	TEF,STR,24GA, BLK	500132	A/R	
E102-1	E4-1	TEF,STR,24GA, WHT	500132	A/R	TWISTED PAIR
E102-2	E4-2	TEF,STR,24GA, BLK	500132	A/R	
E103-1	E7-1	TEF,STR,24GA, WHT	500132	A/R	TWISTED PAIR
E103-2	E7-2	TEF,STR,24GA, BLK	500132	A/R	
E104-1	E8-1	TEF,STR,24GA, WHT	500132	A/R	TWISTED PAIR
E104-2	E8-2	TEF,STR,24GA, BLK	500132	A/R	
E105-1	E11-1	TEF,STR,24GA, WHT	500132	A/R	TWISTED PAIR
E105-2	E11-2	TEF,STR,24GA, BLK	500132	A/R	
E106-1	E12-1	TEF,STR,24GA, WHT	500132	A/R	TWISTED PAIR
E106-2	E12-2	TEF,STR,24GA, BLK	500132	A/R	
E107-1	E15-1	TEF,STR,24GA, WHT	500132	A/R	TWISTED PAIR
E107-2	E15-2	TEF,STR,24GA, BLK	500132	A/R	
E108-1	E16-1	TEF,STR,24GA, WHT	500132	A/R	TWISTED PAIR
E108-2	E16-2	TEF,STR,24GA, BLK	500132	A/R	
E109-1	E19-1	TEF,STR,24GA, WHT	500132	A/R	TWISTED PAIR
E109-2	E19-2	TEF,STR,24GA, BLK	500132	A/R	
E110-1	E20-1	TEF,STR,24GA, WHT	500132	A/R	TWISTED PAIR
E110-2	E20-2	TEF,STR,24GA, BLK	500132	A/R	

RACAL-DANA Instruments Inc. 4 GOODYEAR, IRVINE, CALIFORNIA 92714

DOCUMENT TITLE	SIZE	CODE IDENT NO	DOCUMENT NO.	REV
FINAL ASSY., 1260-40A	A	21793	404775-001	B
	DRN			

WIRE LIST

FROM	TO	CONDUCTOR TYPE, GAUGE, COLOR	PART NUMBER	WIRE LENGTH	REFERENCE
E111-1	E23-1	TEF,STR,24GA, WHT	500132	A/R	TWISTED PAIR
E111-2	E23-2	TEF,STR,24GA, BLK	500132	A/R	
E112-1	E24-1	TEF,STR,24GA, WHT	500132	A/R	TWISTED PAIR
E112-2	E24-2	TEF,STR,24GA, BLK	500132	A/R	

RACAL-DANA Instruments Inc. 4 GOODYEAR, IRVINE, CALIFORNIA 92714

DOCUMENT TITLE	SIZE	CODE IDENT NO.	DOCUMENT NO.	REV.
FINAL ASSY., 1260-40A	A	21793	404775-001	B
	DRN			

WIRE LIST

FROM	TO	CONDUCTOR TYPE, GAUGE, COLOR	PART NUMBER	WIRE LENGTH	REFERENCE
E113-1	E113-4	BARE COPPER 22GA	500022	A/R	BUS
E113-2	E113-3				
E114-1	E114-4				
E114-2	E114-3				
E115-1	E115-4				
E115-2	E115-3				
E116-1	E116-4				
E116-2	E116-3				
E117-1	E117-4				
E117-2	E117-3				
E118-1	E118-4				
E118-2	E118-3				
E119-1	E119-4				
E119-2	E119-3				
E120-1	E120-4				
E120-2	E120-3				
E101-1	E101-4				
E101-2	E101-3				
E102-1	E102-4				
E102-2	E102-3				

RACAL-DANA Instruments Inc. 4 GOODYEAR, IRVINE, CALIFORNIA 92714

DOCUMENT TITLE	SIZE	CODE IDENT NO	DOCUMENT NO	REV
FINAL ASSY., 1260-40B	A	21793	404775-002	B
	DRN			

WIRE LIST

FROM	TO	CONDUCTOR TYPE, GAUGE, COLOR	PART NUMBER	WIRE LENGTH	REFERENCE
E103-1	E103-4	BARE COPPER, 22GA	500022	A/R	BUS
E103-2	E103-3				
E104-1	E104-4				
E104-2	E104-3				
E105-1	E105-4				
E105-2	E105-3				
E106-1	E106-4				
E106-2	E106-3				
E107-1	E107-4				
E107-2	E107-3				
E108-1	E108-4				
E108-2	E108-3				
E109-1	E109-4				
E109-2	E109-3				
E110-1	E110-4				
E110-2	E110-3				
E111-1	E111-4				
E111-2	E111-3				
E112-1	E112-4				
E112-2	E112-3				

RACAL-DANA Instruments Inc. 4 GOODYEAR, IRVINE, CALIFORNIA 92714

DOCUMENT TITLE	SIZE	CODE IDENT NO.	DOCUMENT NO.	REV.
FINAL ASSY., 1260-40B	A	21793	404775-002	B
	DRN			

WIRE LIST

FROM	TO	CONDUCTOR TYPE, GAUGE, COLOR	PART NUMBER	WIRE LENGTH	REFERENCE
E25-1	E21-1	TEF,STR,24GA, WHT	500132	A/R	TWISTED PAIR
E25-2	E21-2	TEF,STR,24GA, BLK	500132	A/R	
E26-1	E22-1	TEF,STR,24GA, WHT	500132	A/R	TWISTED PAIR
E26-2	E22-2	TEF,STR,24GA, BLK	500132	A/R	
E27-1	E17-1	TEF,STR,24GA, WHT	500132	A/R	TWISTED PAIR
E27-2	E17-2	TEF,STR,24GA, BLK	500132	A/R	
E28-1	E18-1	TEF,STR,24GA, WHT	500132	A/R	TWISTED PAIR
E28-2	E18-2	TEF,STR,24GA, BLK	500132	A/R	
E29-1	E13-1	TEF,STR,24GA, WHT	500132	A/R	TWISTED PAIR
E29-2	E13-2	TEF,STR,24GA, BLK	500132	A/R	
E30-1	E14-1	TEF,STR,24GA, WHT	500132	A/R	TWISTED PAIR
E30-2	E14-2	TEF,STR,24GA, BLK	500132	A/R	
E31-1	E9-1	TEF,STR,24GA, WHT	500132	A/R	TWISTED PAIR
E31-2	E9-2	TEF,STR,24GA, BLK	500132	A/R	
E32-1	E10-1	TEF,STR,24GA, WHT	500132	A/R	TWISTED PAIR
E32-2	E10-2	TEF,STR,24GA, BLK	500132	A/R	
E33-1	E5-1	TEF,STR,24GA, WHT	500132	A/R	TWISTED PAIR
E33-2	E5-2	TEF,STR,24GA, BLK	500132	A/R	
E34-1	E6-1	TEF,STR,24GA, WHT	500132	A/R	TWISTED PAIR
E34-2	E6-2	TEF,STR, 24GA, BLK	500132	A/R	

RACAL-DANA Instruments Inc. 4 GOODYEAR, IRVINE, CALIFORNIA 92714

DOCUMENT TITLE	SIZE	CODE IDENT NO	DOCUMENT NO	REV
FINAL ASSY., 1260-40B	A	21793	404775-002	B
	DRN			

WIRE LIST

FROM	TO	CONDUCTOR TYPE, GAUGE, COLOR	PART NUMBER	WIRE LENGTH	REFERENCE
E35-1	E1-1	TEF,STR,24GA, WHT	500132	A/R	TWISTED PAIR
E35-2	E1-2	TEF,STR,24GA, BLK	500132	A/R	
E36-1	E2-1	TEF,STR,24GA, WHT	500132	A/R	TWISTED PAIR
E36-2	E2-2	TEF,STR,24GA, BLK	500132	A/R	

RACAL-DANA Instruments Inc. 4 GOODYEAR, IRVINE, CALIFORNIA 92714

DOCUMENT TITLE	SIZE	CODE IDENT NO.	DOCUMENT NO.	REV
FINAL ASSY., 1260-40B	A	21793	404775-002	B
	DRN			

WIRE LIST

FROM	TO	CONDUCTOR TYPE, GAUGE, COLOR	PART NUMBER	WIRE LENGTH	REFERENCE
E113-1	E113-4	BARE COPPER, 22GA	500022	A/R	BUS
E113-2	E113-3	"	500022	A/R	"
E114-1	E114-4	"	500022	A/R	"
E114-2	E114-3	"	500022	A/R	"
E115-1	E115-4	"	500022	A/R	"
E115-2	E115-3	"	500022	A/R	"
E116-1	E116-4	"	500022	A/R	"
E116-2	E116-3	"	500022	A/R	"
E117-1	E117-4	"	500022	A/R	"
E117-2	E117-3	"	500022	A/R	"
E118-1	E118-4	"	500022	A/R	"
E118-2	E118-3	"	500022	A/R	"
E119-1	E119-4	"	500022	A/R	"
E119-2	E119-3	"	500022	A/R	"
E120-1	E120-4	"	500022	A/R	"
E120-2	E120-3	"	500022	A/R	"
E25-1	E21-1	TEF,STR,24GA, WHT	500132	A/R	TWISTED
E25-2	E21-2	TEF,STR,24GA, BLK	500132	A/R	PAIR

RACAL-DANA Instruments Inc. 4 GOODYEAR. IRVINE. CALIFORNIA 92714

DOCUMENT TITLE	SIZE	CODE IDENT NO.	DOCUMENT NO	REV
FINAL ASSY., 1260-40C	A	21793	404775-003	B
	DRN			

WIRE LIST

FROM	TO	CONDUCTOR TYPE, GAUGE, COLOR	PART NUMBER	WIRE LENGTH	REFERENCE
E26-1	E22-1	TEF,STR,24GA, WHT	500132	A/R	TWISTED PAIR
E26-2	E22-2	TEF,STR,24GA, BLK	500132	A/R	
E27-1	E17-1	TEF,STR,24GA, WHT	500132	A/R	TWISTED PAIR
E27-2	E17-2	TEF,STR,24GA, BLK	500132	A/R	
E28-1	E18-1	TEF,STR,24GA, WHT	500132	A/R	TWISTED PAIR
E28-2	E18-2	TEF,STR,24GA, BLK	500132	A/R	
E29-1	E13-1	TEF,STR,24GA, WHT	500132	A/R	TWISTED PAIR
E29-2	E13-2	TEF,STR,24GA, BLK	500132	A/R	
E30-1	E14-1	TEF,STR,24GA, WHT	500132	A/R	TWISTED PAIR
E30-2	E14-2	TEF,STR,24GA, BLK	500132	A/R	
E31-1	E9-1	TEF,STR,24GA, WHT	500132	A/R	TWISTED PAIR
E31-2	E9-2	TEF,STR,24GA, BLK	500132	A/R	
E32-1	E10-1	TEF,STR,24GA, WHT	500132	A/R	TWISTED PAIR
E32-2	E10-2	TEF,STR,24GA, BLK	500132	A/R	
E33-1	E5-1	TEF,STR,24GA, WHT	500132	A/R	TWISTED PAIR
E33-2	E5-2	TEF,STR,24GA, BLK	500132	A/R	
E34-1	E6-1	TEF,STR,24GA, WHT	500132	A/R	TWISTED PAIR
E34-2	E6-2	TEF,STR,24GA, BLK	500132	A/R	
E35-1	E1-1	TEF,STR,24GA, WHT	500132	A/R	TWISTED PAIR
E35-2	E1-2	TEF,STR,24GA, BLK	500132	A/R	

RACAL-DANA Instruments Inc. 4 GOODYEAR, IRVINE, CALIFORNIA 92714

DOCUMENT TITLE	SIZE	CODE IDENT NO.	DOCUMENT NO.	REV.
FINAL ASSY., 1260-40C	A	21793	404775-003	B
	DRN			

WIRE LIST

FROM	TO	CONDUCTOR TYPE, GAUGE, COLOR	PART NUMBER	WIRE LENGTH	REFERENCE
E36-1	E2-1	TEF,STR,24GA, WHT	500132	A/R	TWISTED PAIR
E36-2	E2-2	TEF,STR,24GA, BLK	500132	A/R	
E101-1	E3-1	TEF,STR,24GA, WHT	500132	A/R	TWISTED PAIR
E101-2	E3-2	TEF,STR,24GA, BLK	500132	A/R	
E102-1	E4-1	TEF,STR,24GA, WHT	500132	A/R	TWISTED PAIR
E102-2	E4-2	TEF,STR,24GA, BLK	500132	A/R	
E103-1	E7-1	TEF,STR,24GA, WHT	500132	A/R	TWISTED PAIR
E103-2	E7-2	TEF,STR,24GA, BLK	500132	A/R	
E104-1	E8-1	TEF,STR,24GA, WHT	500132	A/R	TWISTED PAIR
E104-2	E8-2	TEF,STR,24GA, BLK	500132	A/R	
E105-1	E11-1	TEF,STR,24GA, WHT	500132	A/R	TWISTED PAIR
E105-2	E11-2	TEF,STR,24GA, BLK	500132	A/R	
E106-1	E12-1	TEF,STR,24GA, WHT	500132	A/R	TWISTED PAIR
E106-2	E12-2	TEF,STR,24GA, BLK	500132	A/R	
E107-1	E15-1	TEF,STR,24GA, WHT	500132	A/R	TWISTED PAIR
E107-2	E15-2	TEF,STR,24GA, BLK	500132	A/R	
E108-1	E16-1	TEF,STR,24GA, WHT	500132	A/R	TWISTED PAIR
E108-2	E16-2	TEF,STR,24GA, BLK	500132	A/R	
E109-1	E19-1	TEF,STR,24GA, WHT	500132	A/R	TWISTED PAIR
E109-2	E19-2	TEF,STR,24GA, BLK	500132	A/R	

RACAL-DANA Instruments Inc. 4 GOODYEAR, IRVINE, CALIFORNIA 92714

DOCUMENT TITLE	SIZE	CODE IDENT NO.	DOCUMENT NO.	REV
FINAL ASSY., 1260-40C	A	21793	404775-003	B
	DRN			

WIRE LIST

FROM	TO	CONDUCTOR TYPE, GAUGE, COLOR	PART NUMBER	WIRE LENGTH	REFERENCE
E110-1	E20-1	TEF,STR,24GA, WHT	500132	A/R	TWISTED
E110-2	E20-2	TEF,STR,24GA, BLK	500132	A/R	PAIR
E111-1	E23-1	TEF,STR,24GA, WHT	500132	A/R	TWISTED
E111-2	E23-2	TEF,STR,24GA, BLK	500132	A/R	PAIR
E112-1	E24-1	TEF,STR,24GA, WHT	500132	A/R	TWISTED
E112-2	E24-2	TEF,STR,24GA, BLK	500132	A/R	PAIR

RACAL-DANA Instruments Inc. 4 GOODYEAR, IRVINE, CALIFORNIA 92714

DOCUMENT TITLE	SIZE	CODE IDENT NO.	DOCUMENT NO.	REV.
FINAL ASSY., 1260-40C	A	21793	404775-003	B
	DRN			

List of Suppliers

FSC	SUPPLIER
00779	AMP INC. HARRISBURG, PA
01295	TEXAS INSTRUMENTS INC. DALLAS, TX
01526	GENICOM CORP. WAYNESBORO, VA
02735	RCA (SOLID STATE DIV.) SOMERVILLE, NEW JERSEY
03508	GENERAL ELECTRIC CO. (SEMI-CONDUCTOR PRODUCTS) AUBURN, NY
04713	MOTOROLA INC. (SEMICONDUCTOR PRODUCTS DIV) PHOENIX, AZ
05397	UNION CARBIDE CORP (MATERIALS SYSTEMS DIV) CLEVELAND, OHIO
05972	LOCTITE CORP HARTFORD, CONN
06383	PANDUIT CORP TINLEY PARK, CA
06540	AMATOM ELECTRONIC HARDWARE NEW ROCHELLE, NY
06776	ROBINSON NUGENT INC. NEW ALBANY, IN
07263	FAIRCHILD (SEMICONDUCTOR DIV.) MOUNTAIN VIEW, CA
08261	SPECTRA-STRIP CORP GARDEN GROVE, CA
11236	CTS OF BERNE INC. BERNE, INDIANA
16956	DENNISON MFG. CO. FRAMINGTON, MA
18324	SIGNETICS INC. SUNNYVALE, CA
21793	RACAL-DANA INSTRUMENTS INC. IRVINE, CA
22526	DUPONT CONNECTOR CO. NEW CUMBERLAND, PA
27014	NATIONAL SEMI-CONDUCTOR CORP. SANTA CLARA, CA
29005	STORM PRODUCTS CO. LOS ANGELES, CA
34359	THREE (3) M CO. (COMMERCIAL TAPE DIV.) ST. PAUL, MN
52072	CIRCUIT ASSY. CORP. COSTA MESA, CA
52210	GETTING ENGRG & MFG. CO. SPRING MILLS, PA
53387	THREE (3) M CO. ST. PAUL, MN
55322	SAMTEC, INC. NEW ALBANY, IN
56289	SPAGUE ELECTRIC CO. N. ADAMS, MA
61529	AROMAT CORP. CUPERTINO, CA
62559	SCHROFF, INC. WARWICK, RI
65832	AMERICAN RESEARCH ENGRG ELGIN, IL
70903	BELDEN CORP. CHICAGO, IL
73138	BECKMAN INSTRUMENTS FULLERTON, CA
73445	AMPEREX ELECTRONIC CORP. HICKSVILLE, NY
78189	ILLINOIS TOOL WORKS, INC. (SHAKEPROOF, DIV.) ELGIN, IL
81349	MILITARY SPECIFICATION
86928	SEASTROM MFG CO. INC. GLENDALE, CA
91637	DALE ELECTRONICS INC. COLUMBUS, NEBRASKA
92194	ALPHA WIRE ELIZABETH, NEW JERSEY
95275	VITRAMON, INC. BRIDGEPORT, CONNECTICUT
98291	SEALECTRO CORP. MAMARONECK, NY

1260-45 SIGNAL MATRIX MODULE

1260 VXI SWITCHING CARD

RACAL-DANA

RACAL-DANA INSTRUMENTS INC.

4 Goodyear Street, P.O. Box C-19541, Irvine, CA 92713
Telephone: 714/859-8999, Fax: 714/859-2505

RACAL INSTRUMENTS, LTD.

480 Bath Road, Slough, Berkshire, SL1 6BE, England
Telephone: 44-628 604455, Fax: 44-628 662017

RACAL SYSTEMS ELECTRONIQUE S.A.

18 Avenue Dutartre, 78150 Le Chesnay, France
Telephone: 33-1-3-955-8888, Fax: 33-1-3-955-6735

RACAL ELEKTRONIK SYSTEMS GmbH

Frankenforster Strasse 21, D-5060 Bergisch-Gladbach 1, Federal Republic of Germany
Telephone: 49-22-04-60081, Fax: 49-22-04-21491

RACAL SYSTEMS ELETTRONICA

Via Roma, 108/PAL, E1, 20060 Cassina de Pecchi, Milan, Italy
Telephone: 39-2-9514717/737/770, Fax: 39-2-9514522

RACAL

PUBLICATION DATE: MARCH 1992

Copyright ©1992 by Racal-Dana Instruments Inc. Printed in the United States of America. All rights reserved.
This book or parts thereof may not be reproduced in any form without written permission of the publishers.

TABLE OF CONTENTS

1260-45 SIGNAL MATRIX MODULE

1.0	1260-45 Module Specifications	1-1
2.0	Installation Instructions	1-3
2.1	Unpacking and Inspection	1-3
2.2	Reshipment Instructions	1-3
2.3	Option 01 Installation	1-3
2.4	Module Installation	1-3
3.0	Module Specific Command Syntax	1-4
3.1	Syntax	1-4
3.2	Connector Pin Configuration	1-6
3.3	Expansion and Configuration	1-11
4.0	Theory of Operation	1-13
4.1	Relay Drive Circuitry	1-13
5.0	Drawings	1-15
6.0	Parts List	

TABLES

3-1	1260-45 Pin Assignments	1-8
3-2	Common 1260-45 Configurations	1-12

FIGURES

3-1	1260-45 User Connector Pin Configuration	1-7
3-2	1260-45 Matrix Pinouts	1-10
3-3	Sample Expansion/Configuration Cable	1-12
4-1	Relay Drive Circuitry	1-14

1.0 1260-45 Module Specifications

The 1260-45 Signal Matrix Module is a quad 4 x 16 matrix. It switches two lines per channel, and has the capability of being configured as either four 4 x 16, two 4 x 32, or two 8 x 16 matrices. The configuration is determined at the time of ordering, and is set in the factory. The user connector pinouts have been designed to also allow external configuration by the user, with a minor degradation in high-frequency response. The extent of the degradation is dependent upon the user's cabling, but should be negligible in most applications. The performance specifications given below are for a single 4 x 16 array.

Factory Configurations:

1260-45A	Quad 4 x 16
1260-45B	Dual 4 x 32
1260-45C	Dual 8 x 16

Additional 1260-45A Configurations Via External Cabling:

Single 4 x 64 Single 8 x 32 Single 16 x 16
Dual 4 x 32 Dual 8 x 16
Dual 4 x 16 and a Single 4 x 32
Dual 4 x 16 and a Single 8 x 16
Single 4 x 32 and a Single 8 x 16
Single 4 x 16 and a Single 4 x 48
Single 4 x 16 and a Single 12 x 16

Additional 1260-45B Configurations Via External Cabling:

Single 4 x 64 Single 8 x 32

Additional 1260-45C Configurations Via External Cabling:

Single 8 x 32 Single 16 x 16

User Connector on Module	64-pin, dual row .025" square post header. (Compatible with 64 conductor Ribbon Cable)
User Connector on 1260-45B and -45C Module Configuration Cables:	TBD
Maximum Switchable Voltage (Terminal-Terminal or Terminal-Chassis)	110 VDC, 125 VAC
Maximum Switchable Power per Channel	30W, 62.5 VA (Resistive Load)

Path Resistance	
Worst Case:	< 1.8 ohms
End of Life:	< 2.7 ohms
Isolation Hi-Lo	> TBD
Capacitance	
Open Channel:	TBD
Channel-Chassis:	TBD
Hi-Lo:	TBD
Bandwidth, 50 ohm Termination	TBD
Insertion Loss, 50 ohm Termination:	< TBD to 100 KHz < TBD to 1 MHz < TBD to 10 MHz
Crosstalk, 50 ohm Termination:	< TBD to 100 KHz < TBD to 1 MHz < TBD to 10 MHz
Switching Time	TBD, 1 Relay TBD, Clear Matrix

2.0 Installation Instructions

2.1 Unpacking and Inspection

Before unpacking the switching module, check the exterior of the shipping carton for any signs of damage. All irregularities should be noted on the shipping bill. Remove the instrument from its carton, preserving the factory packaging as much as possible. Inspect the switching module for any defect or damage. Immediately notify the carrier if any damage is apparent. Have a qualified person check the instrument for safety before use.

2.2 Reshipment Instructions

Use the original packing when returning the switching module to Racal-Dana for calibration or servicing. The original shipping carton and the instrument's plastic foam will provide the necessary support for safe reshipment. If the original packing is unavailable, wrap the switching module in plastic sheeting and use plastic spray foam to surround and protect the instrument. Reship in either the original or a new shipping carton.

2.3 Option 01 Installation

Installation of the Option 01 to the 1260-45 is described in the Installation section of the 1260 Series VXI Switching Cards Manual.

2.4 Module Installation

Installation of the 1260-45 Switching Module into a VXI mainframe, including the setting of DIP switches, is described in the Installation section of the 1260 Series VXI Switching Cards Manual. The ID byte DIP switches should be set as follows:

1260-45A:	5=OFF 6=OFF
1260-45B:	5=OFF 6=ON
1260-45C:	5=ON 6=OFF

Note that incorrect setting of the ID byte DIP switches will cause an incorrect module ID to be reported to the user in response to a TBD command. All other module functionality is unaffected by the setting of the ID byte switches.

3.0 Module Specific Command Syntax

This section contains the command syntax information that is unique to the 1260-45. A more detailed explanation of the individual commands is contained in the 1260 Series VXI Switching Cards Manual.

The Module Specific Syntax for the 1260-45 is required in the use of the OPEN and CLOSE commands. It will also appear in data output by the 1260 Series Master in response to the PDATAOUT command.

3.1 Syntax

The Module Specific Syntax for the 1260-45 Quad 4 x 16 Signal Matrix module is as follows:

<mod addr>.<grp no><row no><col no>

where <mod addr> is the address.

NOTE

The <mod addr> used here is not the VXIbus defined logical address of the 1260 Series Master. It is peculiar to the 1260 Series and describes the switching module in relation to the 1260 Master. This address corresponds to the binary value of the switch setting of SW1 on the switching module PCB.

<grp no> is a reference to the matrix containing the relay to be switched. It is a single digit number between 0 and 3.

<row no> is the matrix row to be connected. It is a single digit number between 0 and 3.

<col no> is the matrix column to be connected. It is a two digit number between 00 and 15.

3.1.1 Refer to Figures 3-1, 3-2, and Table 3-1 for group numbers, row numbers, column numbers, and connector pins for this module.

3.1.2 If more than one connection is to be made or broken with contiguous rows or columns, the following format is supported:

<mod addr>.<row no.><col no.>-<row no.><col no.>

3.1.3 Multiple paths and path groups can be specified on a single command line by separating the path designators by commas. Command lines terminate at the end of the line.

EXAMPLE:

OPEN 3.0115,0200-0205,1200-1209,1213,2300,3315

All configurations respond to the same sets of values for <grp no>, <row no>, and <col no>.

3.1.4 The PDATAOUT command causes the specified module to transmit the CLOSED state of the relays. The syntax used is:

PDATAOUT <mod addr>[;<mod addr>][;<mod addr>]....

The response to the PDATAOUT command is as follows:

<header>
<mod addr>. <grp no><row no><col no>[,...]
<grp no><row no><col no>[,...]
<mod addr>.END

where <header> is as follows:

1260-45A: <mod addr>. 1260-45A Quad 4x16 SIGNAL MATRIX MODULE
1260-45B: <mod addr>. 1260-45B Dual 4x32 SIGNAL MATRIX MODULE
1260-45C: <mod addr>. 1260-45C Dual 4x32 SIGNAL MATRIX MODULE

Note the actual <header> sent is determined by the setting of the ID Byte DIP switches on the module, and is independent of any external user configuration cables.

3.1.5 The PSETUP command causes the specified module to transmit its sequence mode. The supported sequence modes are IMM (Immediate), BBM (Break-Before-Make), and MBB (Make-Before-Break). The syntax used is:

PSETUP <mod addr>[;<mod addr>][;<mod addr>]....

The response to the PSETUP command is as follows:

<header>
<mod addr>.<seq mode>
<mod addr>.END

where <seq mode> is IMM, BBM, or MBB, and

where <header> is as follows:

1260-45A: <mod addr>. 1260-45A Quad 4x16 SIGNAL MATRIX MODULE
1260-45B: <mod addr>. 1260-45B Dual 4x32 SIGNAL MATRIX MODULE
1260-45C: <mod addr>. 1260-45C Dual 4x32 SIGNAL MATRIX MODULE

Note the actual <header> sent is determined by the setting of the ID Byte DIP switches on the module, and is independent of any external user configuration cables.

The 1260-45 supports most standard 1260 features. These include Confidence Mode, Equate/Exclude/Scan Lists commands, and the STORE/RECALL commands.

3.2 Connector Pin Configuration

3.2.1 Refer to Figure 3-1 for pin configurations of the front panel connectors J200 to J203. J200 to J203 is Racal-Dana Part Number 602005. The mating connectors are Racal-Dana Part Numbers 602004 for the connector body, 602004-001 for the strain relief, 602004-002 for the pull tabs, and 611053 for the pins. The actual pinouts are given in Table 3-1 and Figure 3-2.

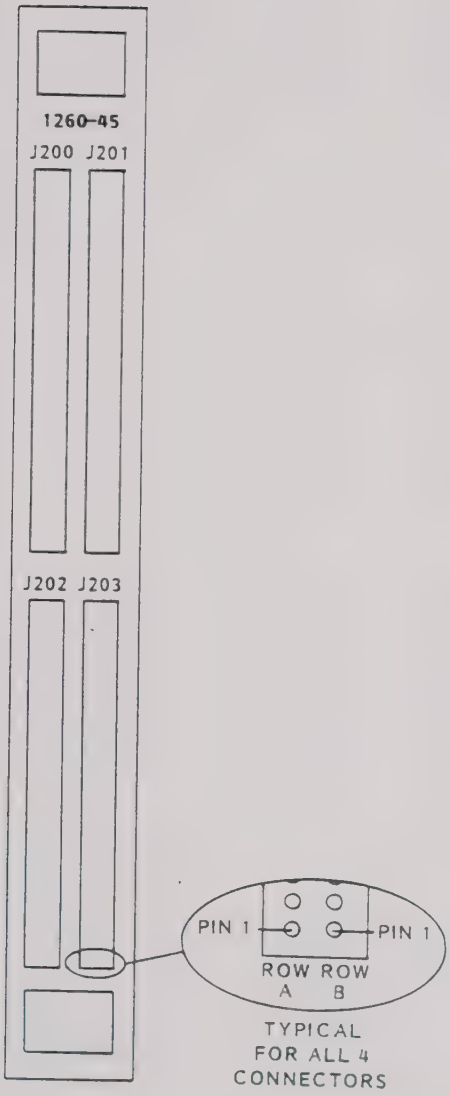

Figure 3-1, 1260-45 User Connector Pin Configuration

Table 3-1, 1260-45 Pin Assignments

Grp	Row	Hi Pin	Lo Pin
0	0	J200-A18	J200-B18
	1	J200-A22	J200-B22
	2	J200-A26	J200-B26
	3	J200-A30	J200-B30

Col	Hi Pin	Lo Pin
0	J202-A32	J202-B32
1	J202-A30	J202-B30
2	J202-A28	J202-B28
3	J202-A26	J202-B26
4	J202-A24	J202-B24
5	J202-A22	J202-B22
6	J202-A20	J202-B20
7	J202-A18	J202-B18
8	J202-A16	J202-B16
9	J202-A14	J202-B14
10	J202-A12	J202-B12
11	J202-A10	J202-B10
12	J202-A8	J202-B8
13	J202-A6	J202-B6
14	J202-A4	J202-B4
15	J202-A2	J202-B2

Grp	Row	Hi Pin	Lo Pin
1	0	J200-A20	J200-B20
	1	J200-A24	J200-B24
	2	J200-A28	J200-B28
	3	J200-A32	J200-B32

Col	Hi Pin	Lo Pin
0	J202-A31	J202-B31
1	J202-A29	J202-B29
2	J202-A27	J202-B27
3	J202-A25	J202-B25
4	J202-A23	J202-B23
5	J202-A21	J202-B21
6	J202-A19	J202-B19
7	J202-A17	J202-B17
8	J202-A15	J202-B15
9	J202-A13	J202-B13
10	J202-A11	J202-B11
11	J202-A9	J202-B9
12	J202-A7	J202-B7
13	J202-A5	J202-B5
14	J202-A3	J202-B3
15	J202-A1	J202-B1

Table 3-1, 1260-45 Pin Assignments (continued)

Grp	Row	Hi Pin	Lo Pin
2	0	J201-A18	J201-B18
	1	J201-A22	J201-B22
	2	J201-A26	J201-B26
	3	J201-A30	J201-B30

Col	Hi Pin	Lo Pin
0	J203-A32	J203-B32
1	J203-A30	J203-B30
2	J203-A28	J203-B28
3	J203-A26	J203-B26
4	J203-A24	J203-B24
5	J203-A22	J203-B22
6	J203-A20	J203-B20
7	J203-A18	J203-B18
8	J203-A16	J203-B16
9	J203-A14	J203-B14
10	J203-A12	J203-B12
11	J203-A10	J203-B10
12	J203-A8	J203-B8
13	J203-A6	J203-B6
14	J203-A4	J203-B4
15	J203-A2	J203-B2

Grp	Row	Hi Pin	Lo Pin
3	0	J201-A20	J201-B20
	1	J201-A24	J201-B24
	2	J201-A28	J201-B28
	3	J201-A32	J201-B32

Col	Hi Pin	Lo Pin
0	J203-A31	J203-B31
1	J203-A29	J203-B29
2	J203-A27	J203-B27
3	J203-A25	J203-B25
4	J203-A23	J203-B23
5	J203-A21	J203-B21
6	J203-A19	J203-B19
7	J203-A17	J203-B17
8	J203-A15	J203-B15
9	J203-A13	J203-B13
10	J203-A11	J203-B11
11	J203-A9	J203-B9
12	J203-A7	J203-B7
13	J203-A5	J203-B5
14	J203-A3	J203-B3
15	J203-A1	J203-B1

Chassis Ground:

J200	A1-A4, A19, A21, A23, A25, A27, A29, A31
	B1-B4, B19, B21, B23, B25, B27, B29, B31
J201	A1-A4, A19, A21, A23, A25, A27, A29, A31
	B1-B4, B19, B21, B23, B25, B27, B29, B31

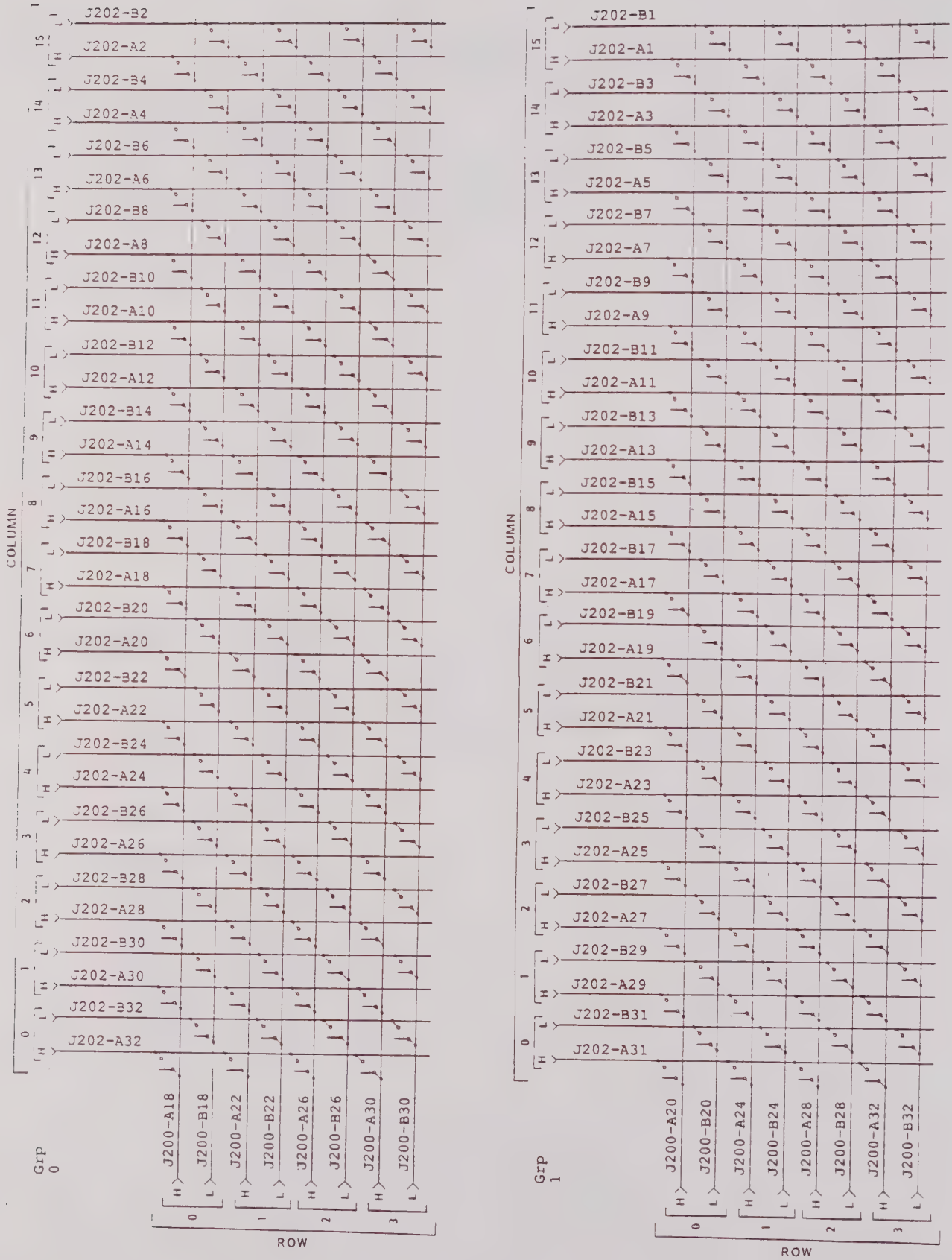

Figure 3-2, 1260-45 Matrix Pinouts

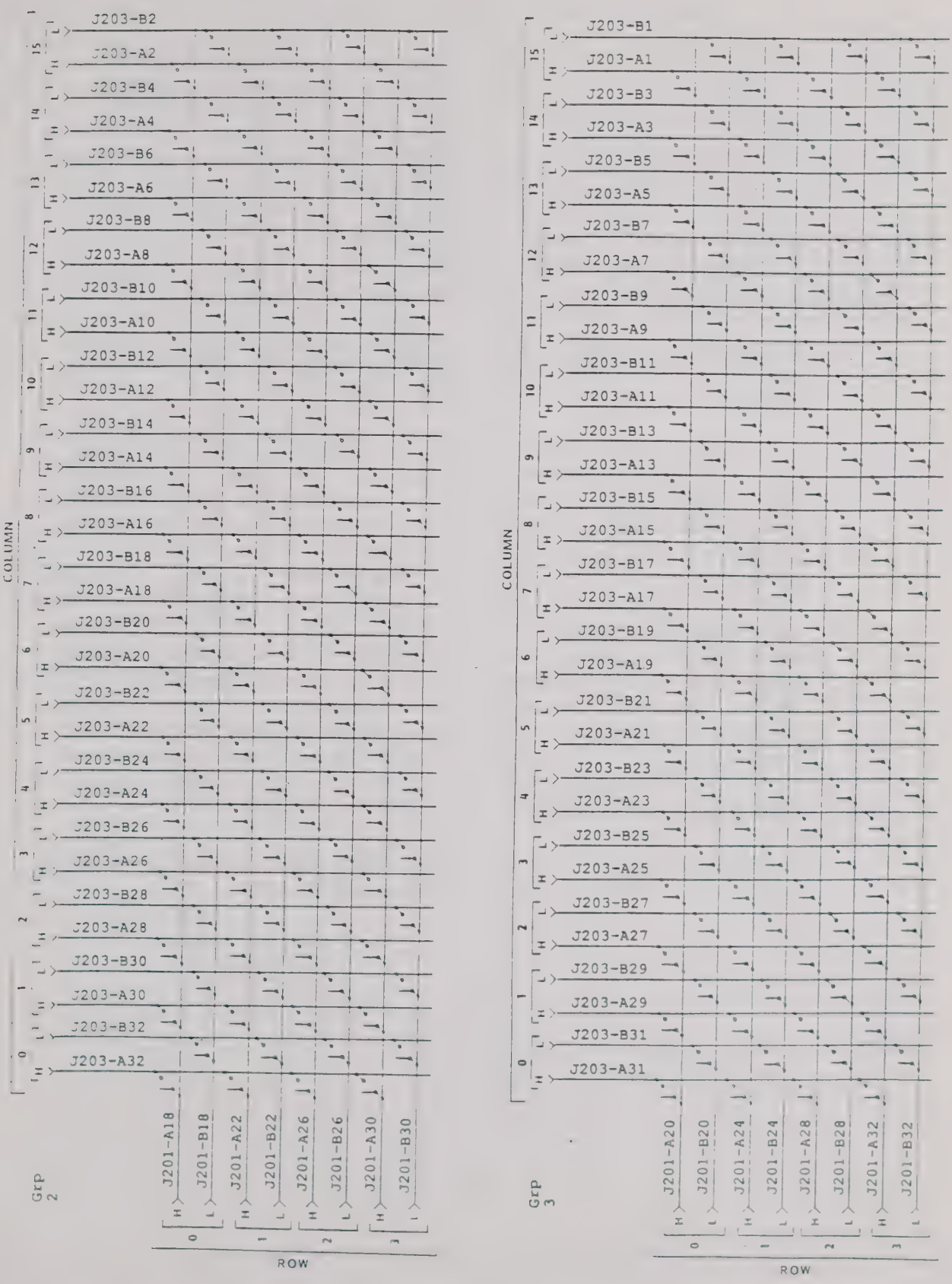

Figure 3-2, 1260-45 Matrix Pinouts

3.3 Expansion and Configuration

3.3.1 Internally, the 1260-45 consists of two PCBAs with identical, dual 4 x 16 matrices. Each PCBA can be configured, via internal push-on jumpers, to connect the Rows and Columns of the two matrices. If Row 0 of the first matrix is connected to Row 0 of the second matrix, Row 1 of the first is connected to Row 1 of the second, etc., then the PCBA becomes a 4 x 32 matrix. The difference between the 1260-45A and the 1260-45B is the -45B module is shipped with these jumpers installed on both PCBA's at the factory. Similarly, if Column 0 of the first matrix is connected to Column 0 of the second matrix, etc., the PCBA becomes an 8 x 16 matrix. The 1260-45C has the columns of the two PCBAs connected in this fashion when shipped from the factory.

3.3.2 The 1260-45 module can also be configured externally. Racal-Dana P/N TBD, shown in Figure 5-1, is included in the ship kit of each module for this purpose. Connector 3 is the regular user interface. The mate to this connector can be a discrete wire connector or a ribbon cable, depending upon user preferences. Connectors 1 and 2 are connected in parallel across the ribbon cable. When these are inserted into J200 and J201, the result is a dual 4 x 32 array. Unlike the 1260-45B configuration, the interconnected matrices are on different PCBAs inside the module. This ribbon cable can then be extended to adjacent 1260-45 modules in the VXI mainframe to yield dual 4 x 64, dual 4 x 96, etc. matrices. The dual arrays can be connected together using either the internal jumpers in a 1260-45B module, jumpers in the user cabling, or a "configuration" connector across the ribbon cable. The mate to the configuration connector should be a discrete wire, loopback connector; i.e., it connects Group 0 Row 0 to Group 2 Row 0, Group 1 Row 1 to Group 1 Row 2, etc. This loopback "configuration" connector would allow a single 1260-45A to become a 4 x 64 matrix.

3.3.3 Columns can be connected in the same fashion to yield a single 16 x 16 matrix per module. Table 3-2 shows some common configurations.

Table 3-2, Common 1260-45 Configurations

Desire Configuration	Start With	Cable Joins
4 x 64	1260-54A	Rows w/Loopback Connector
4 x 64	1260-45B	Rows w/o Loopback Connector
8 x 32	1260-45B	Columns w/o Loopback Connector
8 x 32	1260-45C	Rows w/o Loopback Connector
16 x 16	1260-45A	Columns w/Loopback Connector
16 x 16	1260-45C	Columns w/o Loopback Connector

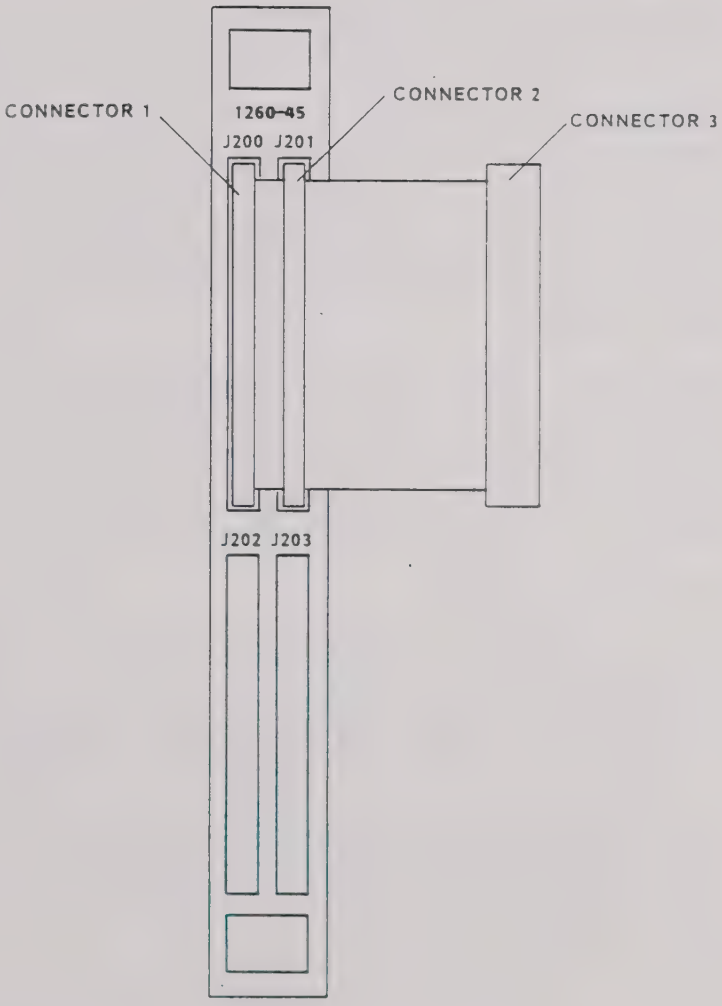

Figure 3-3, Sample Expansion/Configuration Cable

4.0 Theory of Operation

The 1260-45 consists of two PCBAs. The larger PCBA, 405043, contains the VXI LBus interface, as well as half of the relay matrix and all of the relay drive electronics. The smaller PCBA, 405044, contains the other half of the relay matrix. The boards are connected by a ribbon cable which connects the relay coils to the drive electronics. The relay signal lines are not passed between the two PCBAs inside the module. The VXI interface is described in the Theory of Operation section of the 1260 Series VXI Switching Cards Manual.

There is no connection between the relay and coil signal lines. They both are arranged into two 4 x 16 matrices on each board. There are two coils and the associated circuitry for each relay; one to set the relay, and one to reset it. The latching-type relays' coils are only energized when their state is to be changed.

Several features have been incorporated into the card to reduce the time necessary to update the state of the relays on the card. First, relay coils have been grouped into sets of 16. This reduces the amount of backplane overhead associated with communicating an update from the -01 CPU to the individual switch module. Second, the software in the -01 keeps track of the state of the relays. Commands are only sent to the card for the relays that change, rather than for the entire array. This minimizes the volume of data that must be sent to the card via the serial, local bus interface.

All of the rows have non-latching relays in series with the signal line inputs. This causes the row lines to be opened upon power fail. Upon power up, these relays remain open until after the -01 CPU has reset each relay. When the power-up sequence is completed, these "guard" relays are closed and the card functions normally. The guard relays are transparent, and are not accessible, to the user.

4.1 Relay Drive Circuitry

4.1.1 The quantity of drivers is reduced, and the MTBF improved by arranging the relay coils into matrices. As shown in Figure 4-1, one end of each relay is connected to a source driver, and the other end is connected to a sink driver. The relay is not actuated unless the relay coil's source and sink drivers are both turned on.

4.1.2 The diodes in series with the relay coils have two functions. The first function is to protect the driver ICs by clamping the flyback voltages. The second function is to block "trap door" paths through the array which might cause non-specified relays to actuate.

Circuitry is also included to test for hardware faults in the coil/diode circuitry. Both opens and shorts can be detected. The basic technique is to measure the voltage applied to the sink driver when the source driver is ON or OFF. Referring to Figure 6-1, assume the relay coil on K1 between pins 1 and 5 is actuated. This means all drivers are OFF except for U1 Pin 18 and U2 Pin 18. Under normal conditions, this will cause the voltage on U3A Pin 4 to be below the reference threshold. At the same time, the voltage on U3B Pin 6 will be higher than the reference threshold because its sink driver is OFF, eliminating the IR voltage drop across Pin 1 and 5 of K2. If either that coil or CR3 are open, there will be no pull-up voltage, and the voltage on U3B Pin 6 will be lower than the reference threshold causing the software to detect a fault. If the coil between Pins 1 and 5 of K1 is shorted, the voltage on U3A Pin 4 will be above the threshold which will also be detected as a fault. If CR4 is shorted, the voltage on U3B Pin 6 will basically be the result of the voltage divider formed by K2 Pins 1-5, K2 Pins 10-6, and K1 Pins 10-6. The threshold voltage has been chosen so this resulting voltage is below it. A fault condition will then be detected.

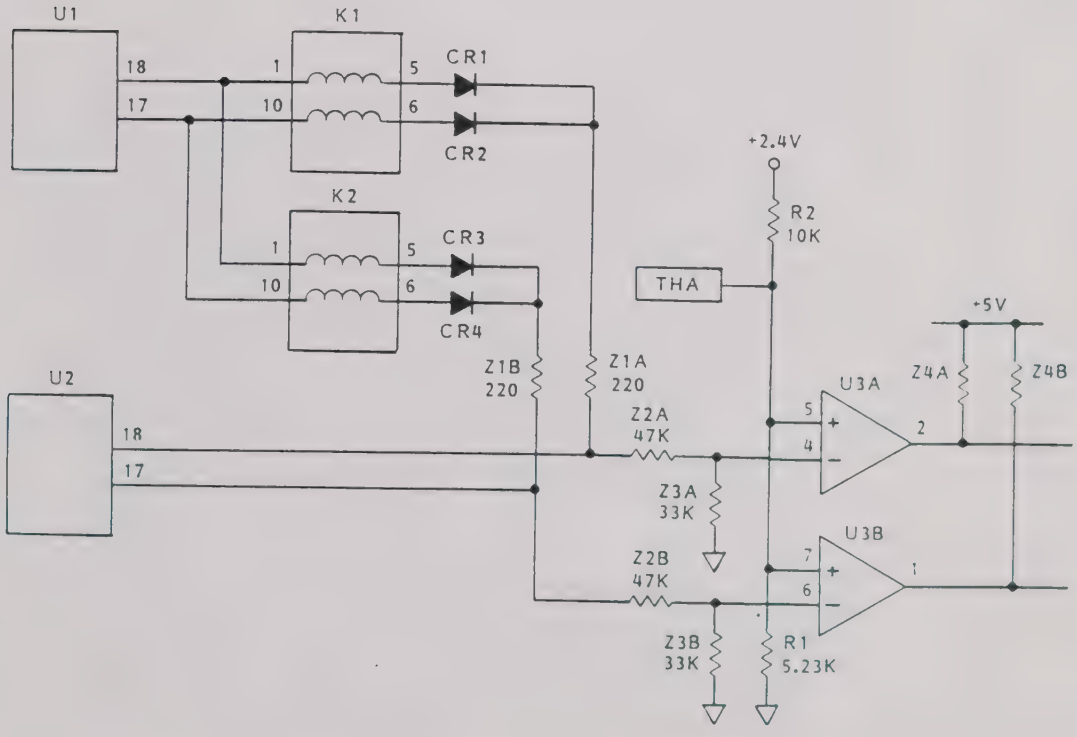

Figure 4-1, Relay Drive Circuitry

5.0 Drawings

405043	PCB Assy, 1260-45	1-17
435043	Schematic, 1260-45	1-19
405044	PCB Assy, 1260-45D	1-40
435044	Schematic, 1260-45D	1-41

6.0 Parts List

------	List of Suppliers	1-52
407052-001	Final Assy, 1260-45	1-53
407052-002	Final Assy, 1260-45	1-53
407053-003	Final Assy, 1260-45	1-54
401051-001	Shipping Kit, 1260-45, Crimp Connectors	1-54
401051-002	Shipping Kit, 1260-45, IDC Connectors	1-54
407043	PCB Assy, 1260-45	1-55
407044	PCB Assy, 1260-45D	1-56

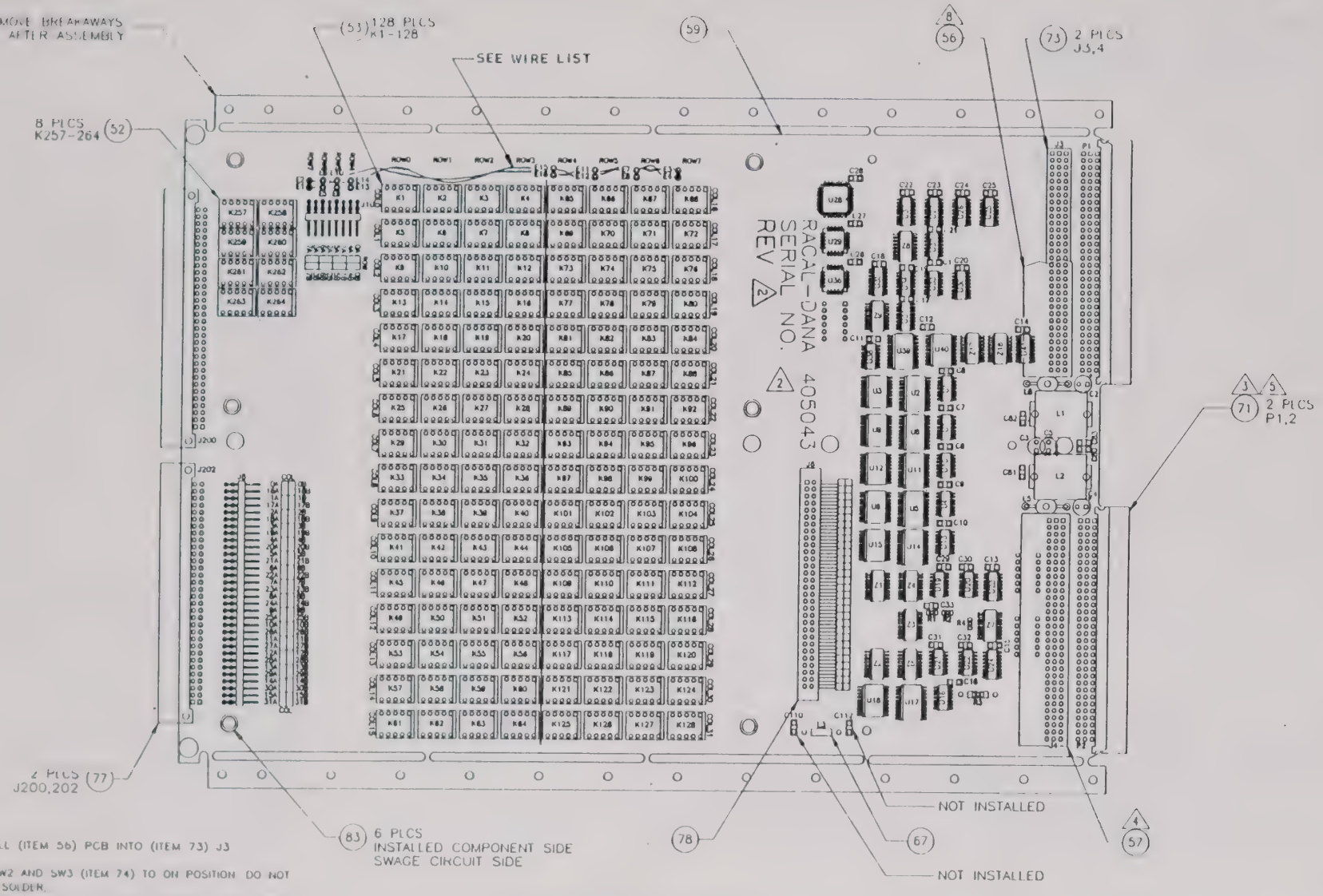

COMPONENT SIDE

8 INSTALL (ITEM 56) PCB INTO (ITEM 73) J3

7 SET SW2 AND SW3 (ITEM 74) TO ON POSITION DO NOT WAVE SOLDER.

6 SET SW1 (ITEM 74) TO LOGICAL ADDRESS 1 PER TABLE 1 ALSO SET SW1 POSITION 5 TO ON. DO NOT WAVE SOLDER.

5 P1 AND P2 MUST BE INSTALLED FLUSH AT RIGHT ANGLE TO PCB

4 INSTALL (ITEM 57) PCB INTO (ITEM 73) J4

3 SOLDER TAILS ON CIRCUIT SIDE OF PCB FOR P1 AND P2 (ITEM 71) TO BE TRIMMED TO A MAXIMUM HEIGHT OF .060.

2 INK STAMP SERIAL NUMBER AND CURRENT REVISION ON COMPONENT SIDE APPROX WHERE SHOWN.

1 REFERENCE SCHEMATIC 405043

NOTES UNLESS OTHERWISE SPECIFIED

PROPRIETARY NOTICE

THIS DOCUMENT AND THE TECHNICAL DATA HEREON DISCLOSED ARE PROPRIETARY TO RACAL DANA INSTRUMENTS INC. AND SHALL NOT WITHOUT EXPRESS WRITTEN PERMISSION OF RACAL DANA INSTRUMENTS INC. BE USED RELEASED OR DISCLOSED IN WHOLE OR IN PART OR USED TO SOLICIT QUOTATIONS FROM A COMPETITIVE SOURCE OR USED FOR MANUFACTURE BY ANYONE OTHER THAN RACAL DANA INSTRUMENTS INC. THE INFORMATION HEREON HAS BEEN DEVELOPED AT PRIVATE EXPENSE AND MAY ONLY BE USED FOR PURPOSES OF ENGINEERING EVALUATION AND FOR INCORPORATION INTO TECHNICAL SPECIFICATIONS AND OTHER DOCUMENTS WHICH SPECIFY PROCUREMENT OF PRODUCTS FROM RACAL DANA INSTRUMENTS INC.

THIS DOCUMENT WAS CREATED AND BACKED UP BY ENGINEERING'S VALID ALLEGRO CAD SYSTEM. ALL REVISIONS ARE TO BE MADE ON THE VALID ALLEGRO SYSTEM IN ACCORDANCE WITH COMPANY POLICY FOR C.A.D. DOCUMENTATION

RACAL-DANA Instruments Inc.			
4 GOODYEAR, IRVINE, CALIFORNIA 92714			
DOCUMENT TITLE: PCB ASSY,1260-45			
SIZE: D	CODE IDENT NO: 21793	DOCUMENT NO: 405043	REV: A
SCALE		SHEET 1 OF 6	

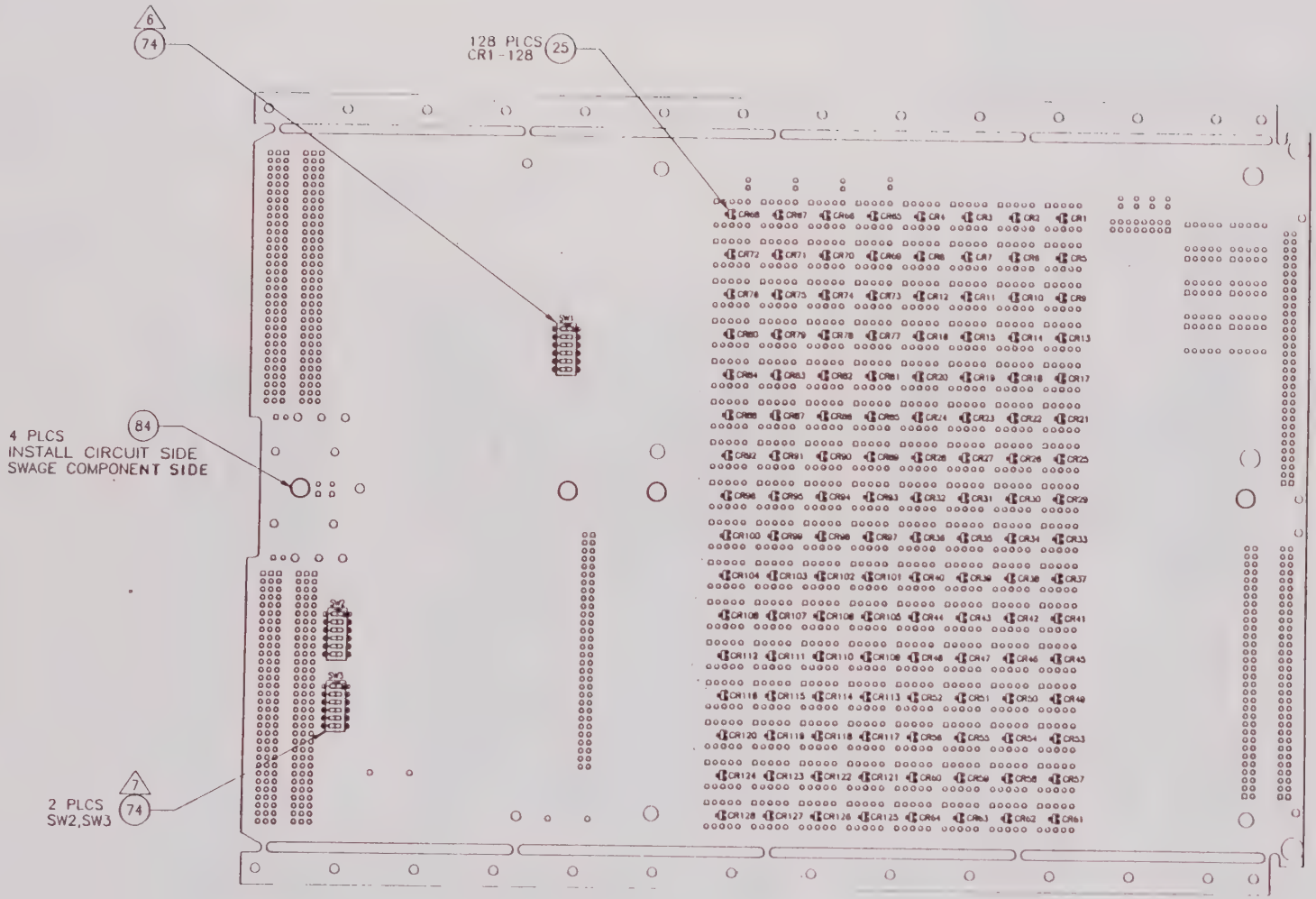

CIRCUIT SIDE

SIZE	CODE IDENT NO	DOCUMENT NO	REV
D	21793	405043	A
SCALE		SHEET 2 OF 6	

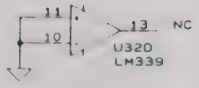

REF DES	IC TYPE	+5V PIN NO	GND PIN NO
U37	74HCT253	16	8
U36	231152 (16L8)	20	10
U31	74HCT85	16	8
U30	74LS138	16	8
U29	231153 (16R4)	20	10
U28	231154 (22V10)	28	14
U27	26LS31	16	8
U25, 26	26LS32	16	8
U23, 24, 35, 41	74HCT166	16	8
U32	LM339	3	12
U19, 20, 21, 22, 32	LM339	NC	12
U15, 18, 40	2803	NC	9
U3, 6, 9, 12	2982	NC	10
U2, 5, 8, 11, 14, 17, 39	74HCT273	20	10
U1, 4, 7, 10, 13, 16, 33, 34, 38	74HCT164	14	7

IC POWER AND GROUND CONNECTIONS

HIGHEST REF. DES
Z18
W1
U41
SW3
R4
P2
L6
K264
J202
E16
CR128
C112

NOTES UNLESS OTHERWISE SPECIFIED

1. RESITOR VALUES ARE IN OHMS
2. RELAYS K257 THRU K264 ARE RACAL DANA P/N 310197
3. RELAYS K1 THRU K128 ARE RACAL DANA P/N 310232
4. C110 AND C112 ARE NOT INSTALLED
5. ALL RELAYS SHOWN IN DE-ENERGIZED POSITION
6. RESISTOR NETWORKS ARE IN OHMS
7. CAPACITOR VALUES ARE IN MICROFARADS, 50V, +/-20% UNLESS OTHERWISE SPECIFIED

"THIS DOCUMENT WAS CREATED AND BACKED UP ON THE 'ORCAD/SDT.III' CAD SYSTEM. ALL REVISIONS ARE TO BE MADE ON THE 'ORCAD/SDT.III' SYSTEM IN ACCORDANCE WITH COMPANY POLICY FOR CAD DOCUMENTATION."

PROPRIETARY NOTICE

THIS DOCUMENT AND THE TECHNICAL DATA HEREON DISCLOSED ARE PROPRIETARY TO RACAL DANA INSTRUMENTS INC. AND SHALL NOT, WITHOUT EXPRESS WRITTEN PERMISSION OF RACAL DANA INSTRUMENTS INC. BE USED, RELEASED OR DISCLOSED IN WHOLE OR IN PART, OR USED TO SOLICIT QUOTATIONS FROM A COMPETITIVE SOURCE OR USED FOR MANUFACTURE BY ANYONE OTHER THAN RACAL DANA INSTRUMENTS INC. THE INFORMATION HEREON HAS BEEN DEVELOPED AT PRIVATE EXPENSE AND MAY ONLY BE USED FOR PURPOSES OF ENGINEERING EVALUATION AND FOR INCORPORATION INTO TECHNICAL SPECIFICATIONS AND OTHER DOCUMENTS WHICH SPECIFY PROCUREMENT OF PRODUCTS FROM RACAL DANA INSTRUMENTS INC.

RACAL-DANA Instruments Inc.
4 GOODYEAR, IRVINE, CALIFORNIA 92714

DOCUMENT TITLE

SCHEM, 1260-45

SIZE	CODE IDENT NO	DOCUMENT NO	REV
B	21793	435043	A

SCALE —— SHEET 1 OF 21

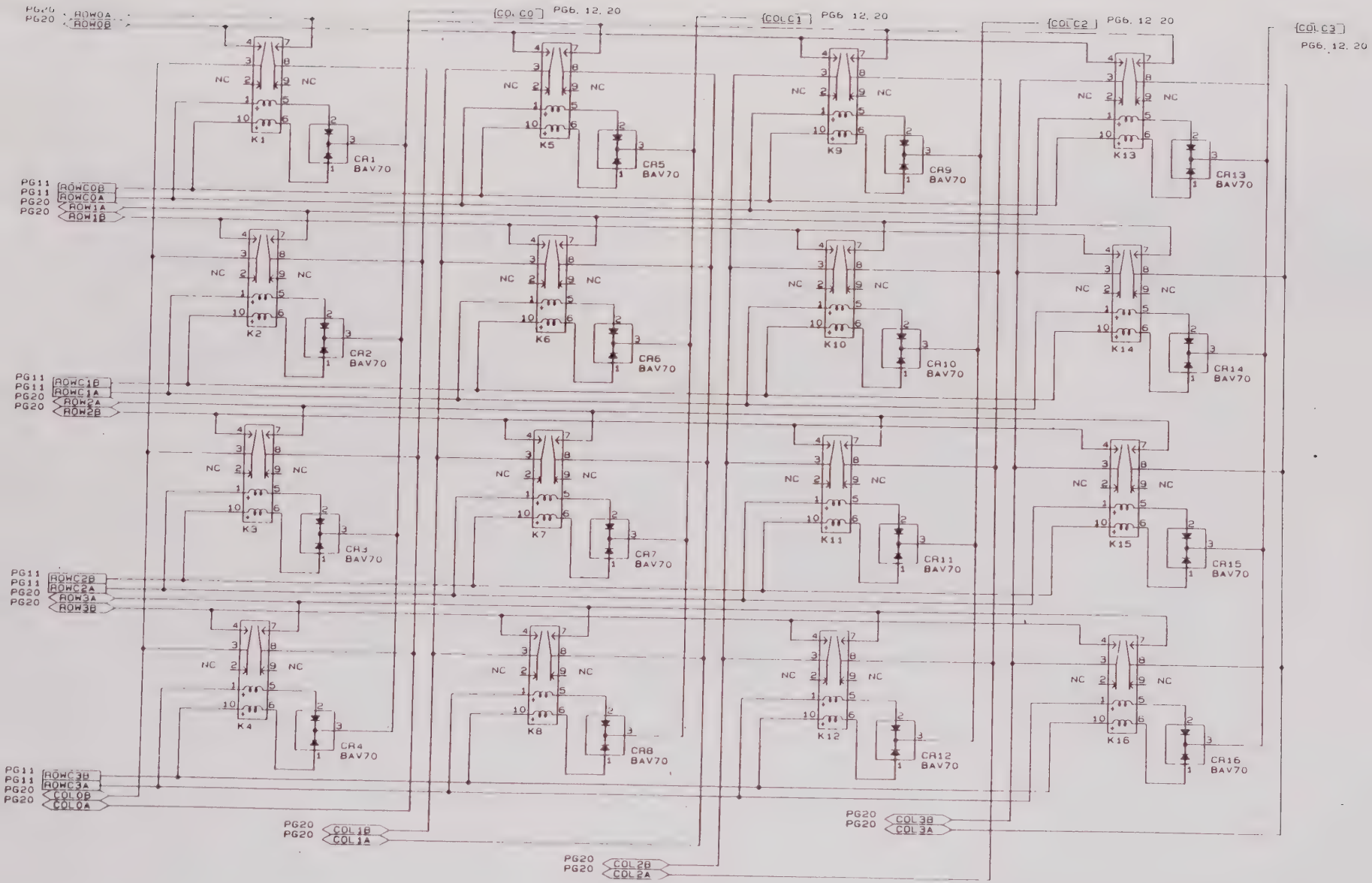

SIZE	CODE IDENT NO	DOCUMENT NO	REV
B	21793	435043	A
SCALE		SHEET 2 OF 21	

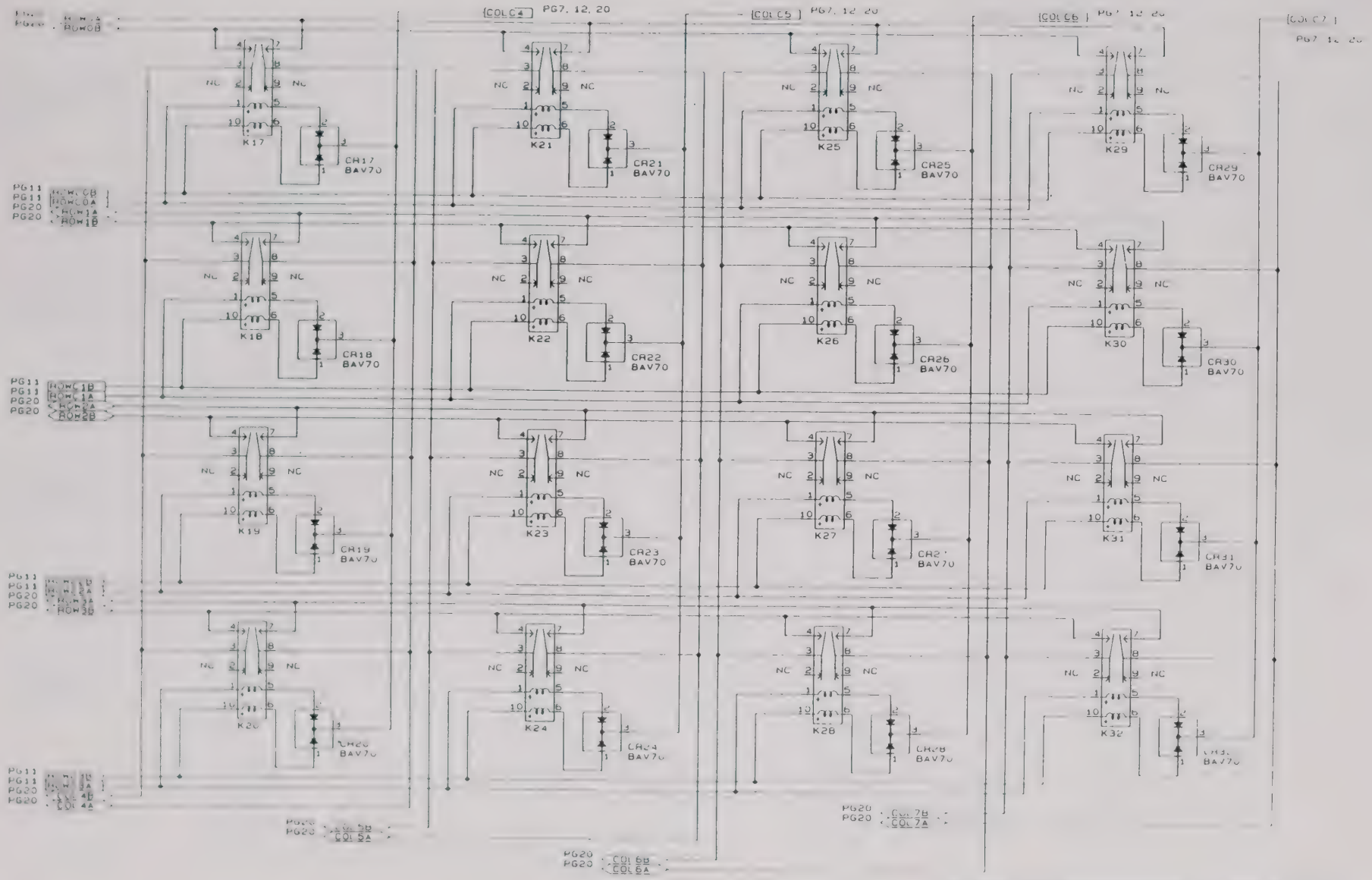

SIZE	CODE IDENT NO	DOCUMENT NO	REV
B	21793		A
SCALE		SHEET 3 OF 23	

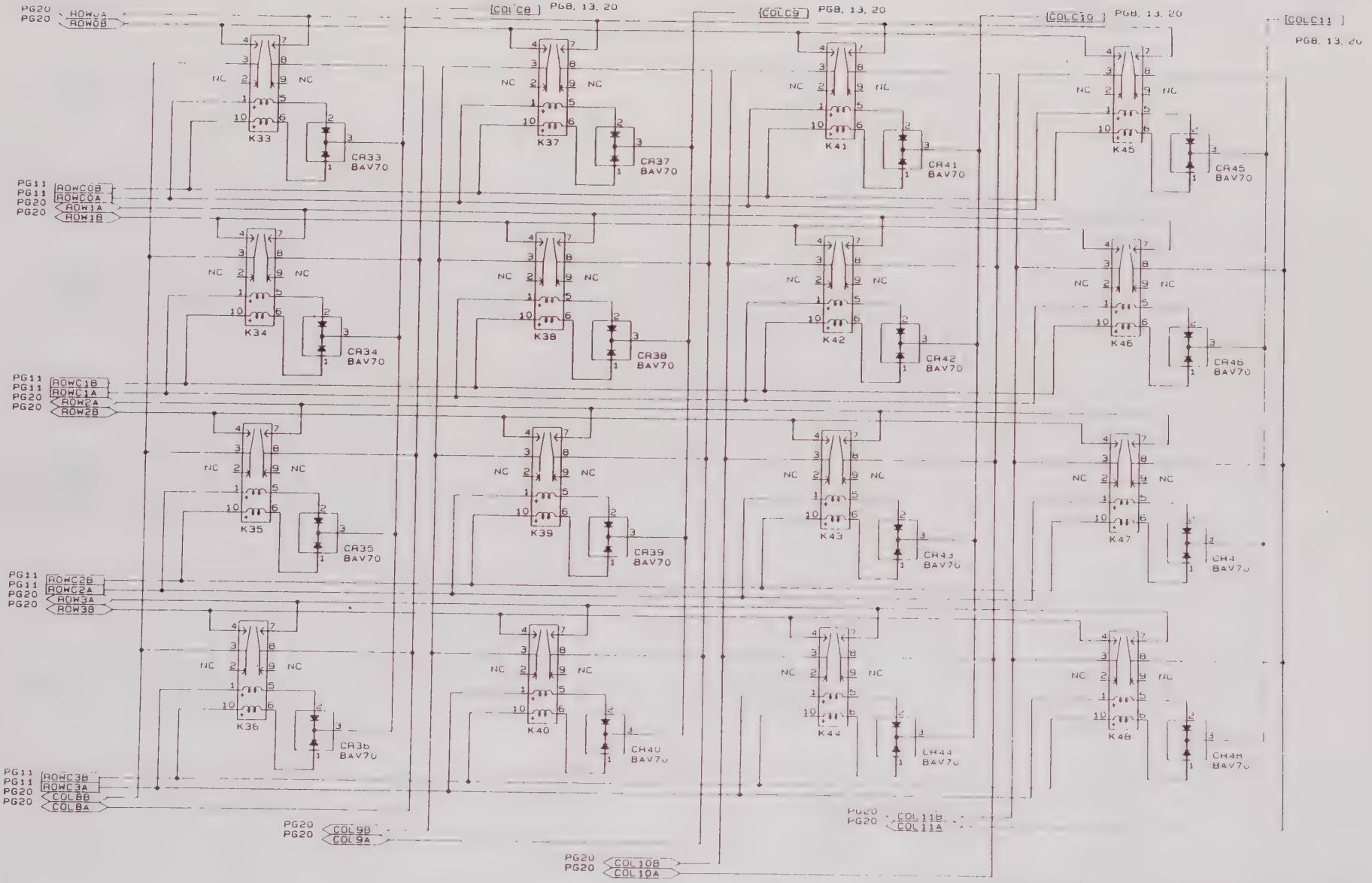

SIZE	CODE IDENT NO	DOCUMENT NO	REV
B	21793	4350-43	A
SCALE		SHEET 4	OF 11

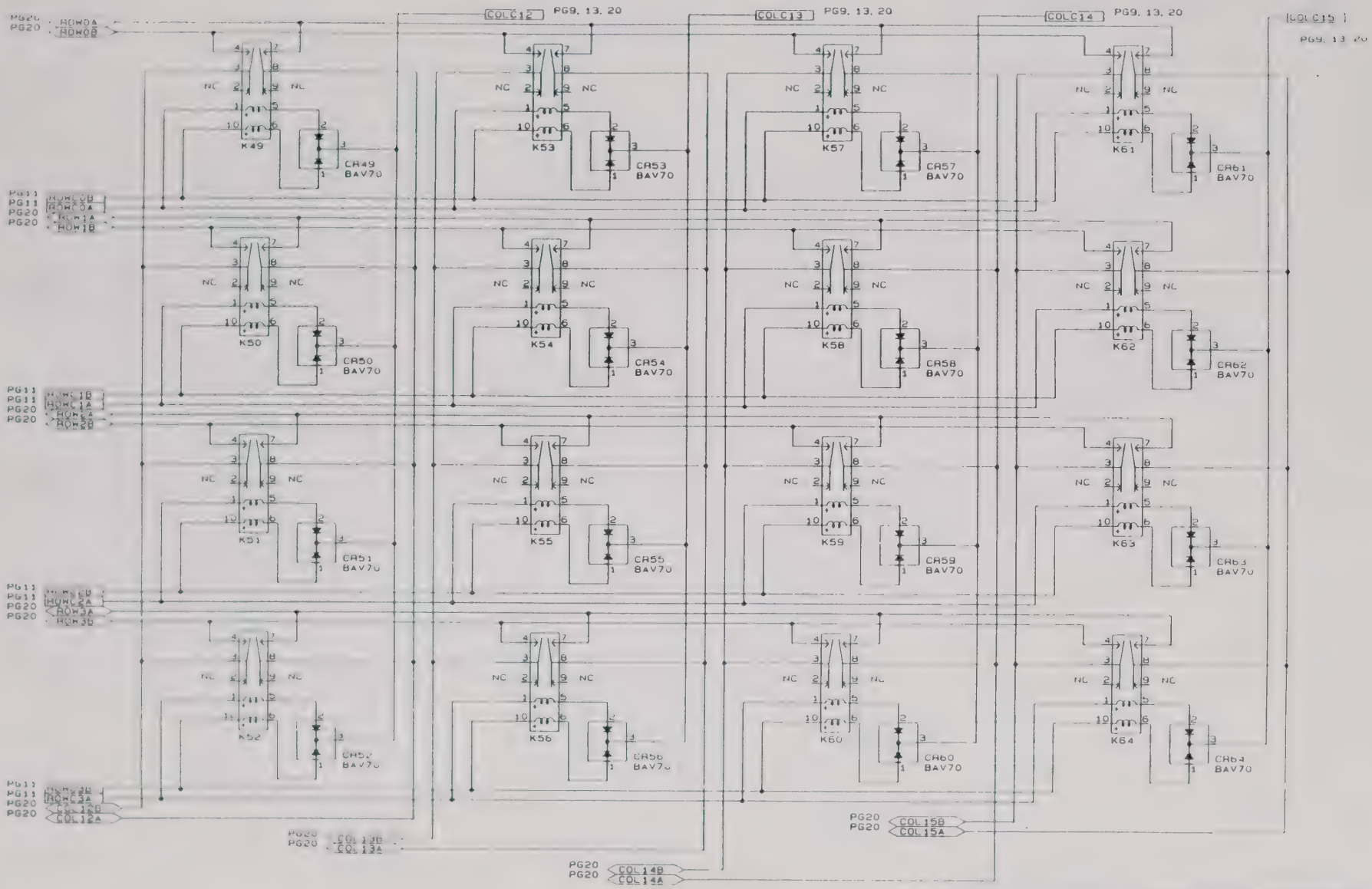

SIZE	CODE IDENT NO	DOCUMENT NO	REV
B	21793	435043	A
SCALE		SHEET 5 OF 21	

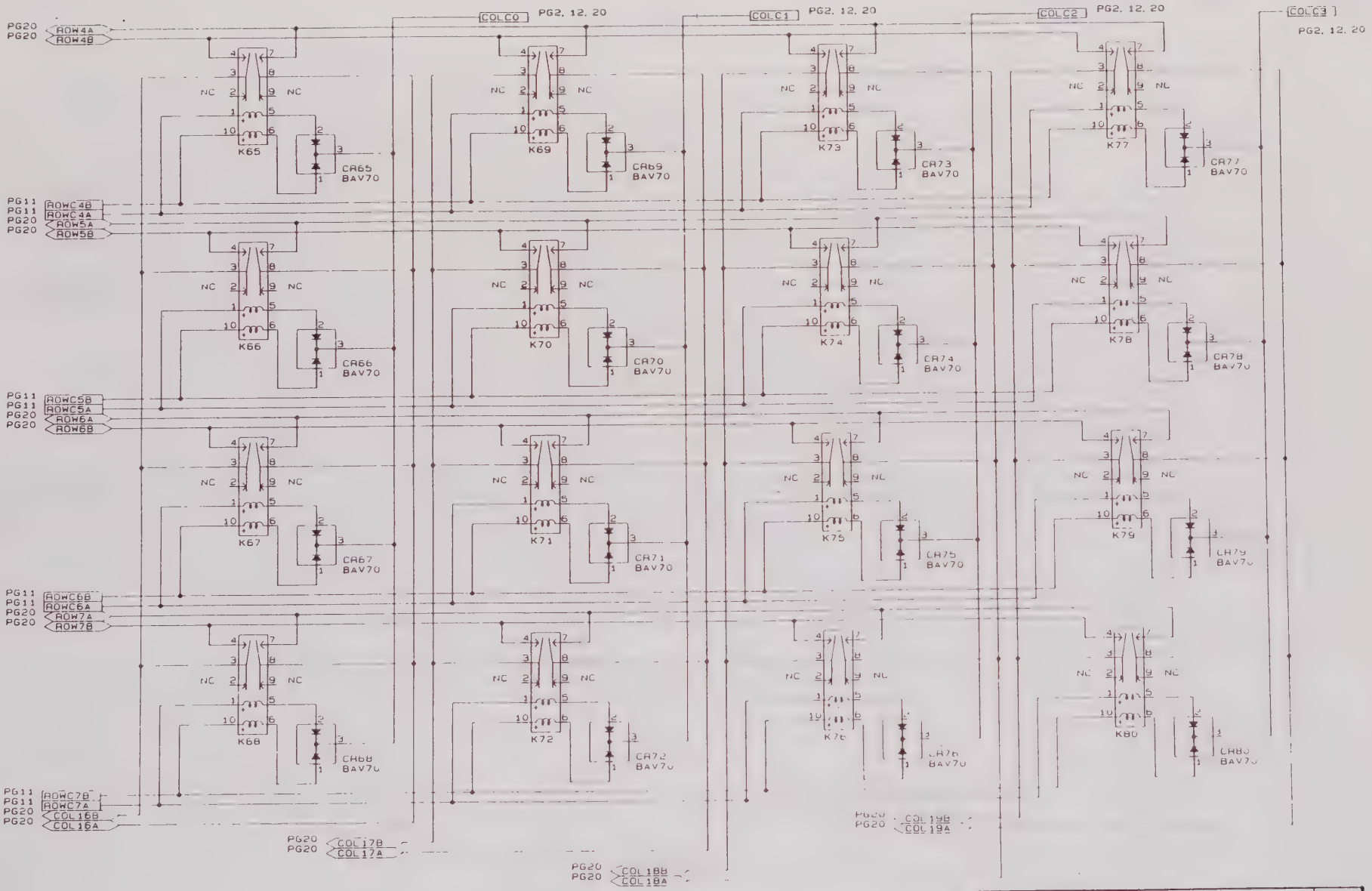

SIZE	CODE IDENT NO	DOCUMENT NO	REV
B	21793	435043	A
SCALE		SHEET 6 OF 21	

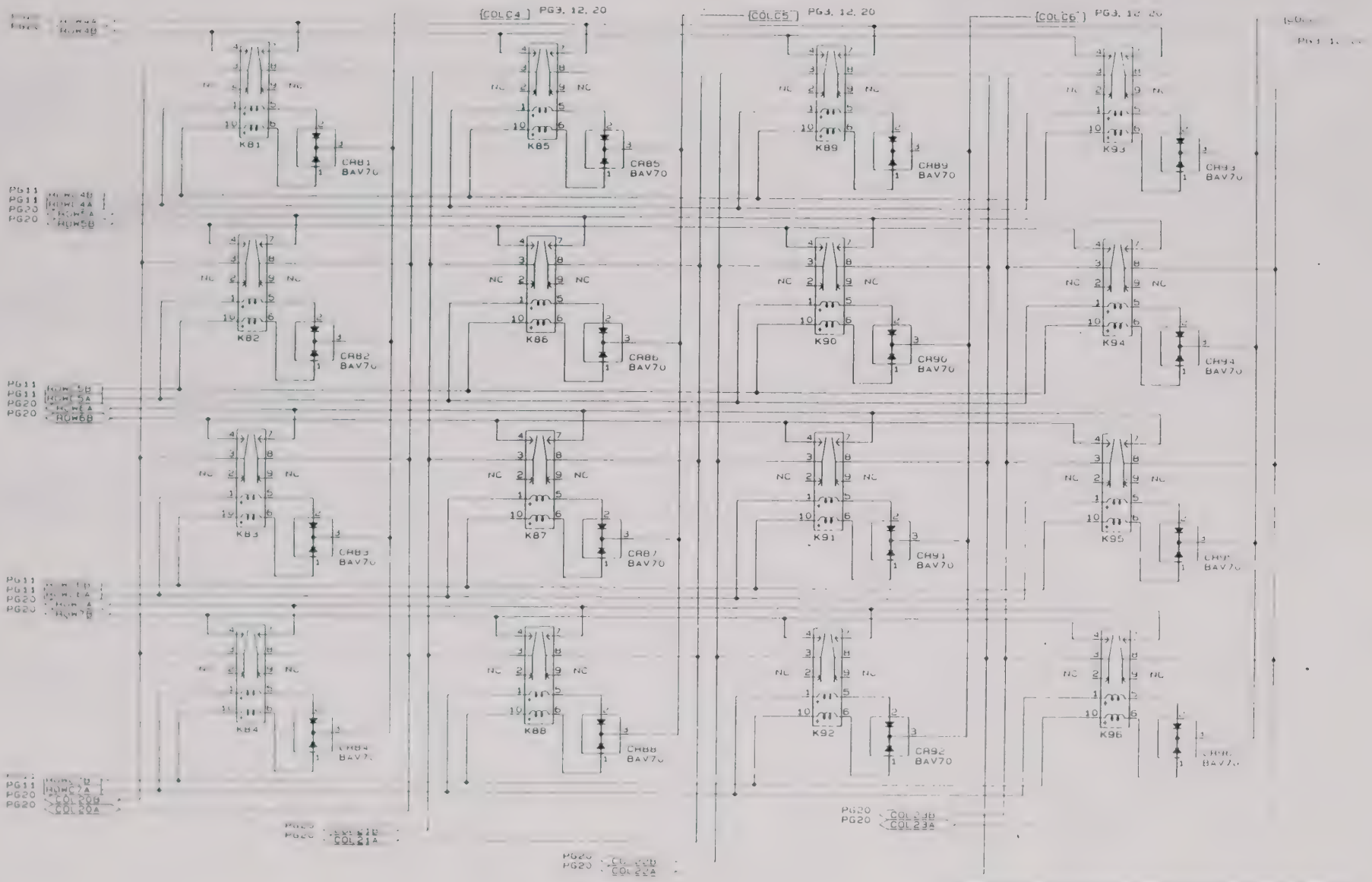

SIZE	CODE IDENT NO	DOCUMENT NO	REV
B	21793	13502	A
SCALE		SHEET OF 1	

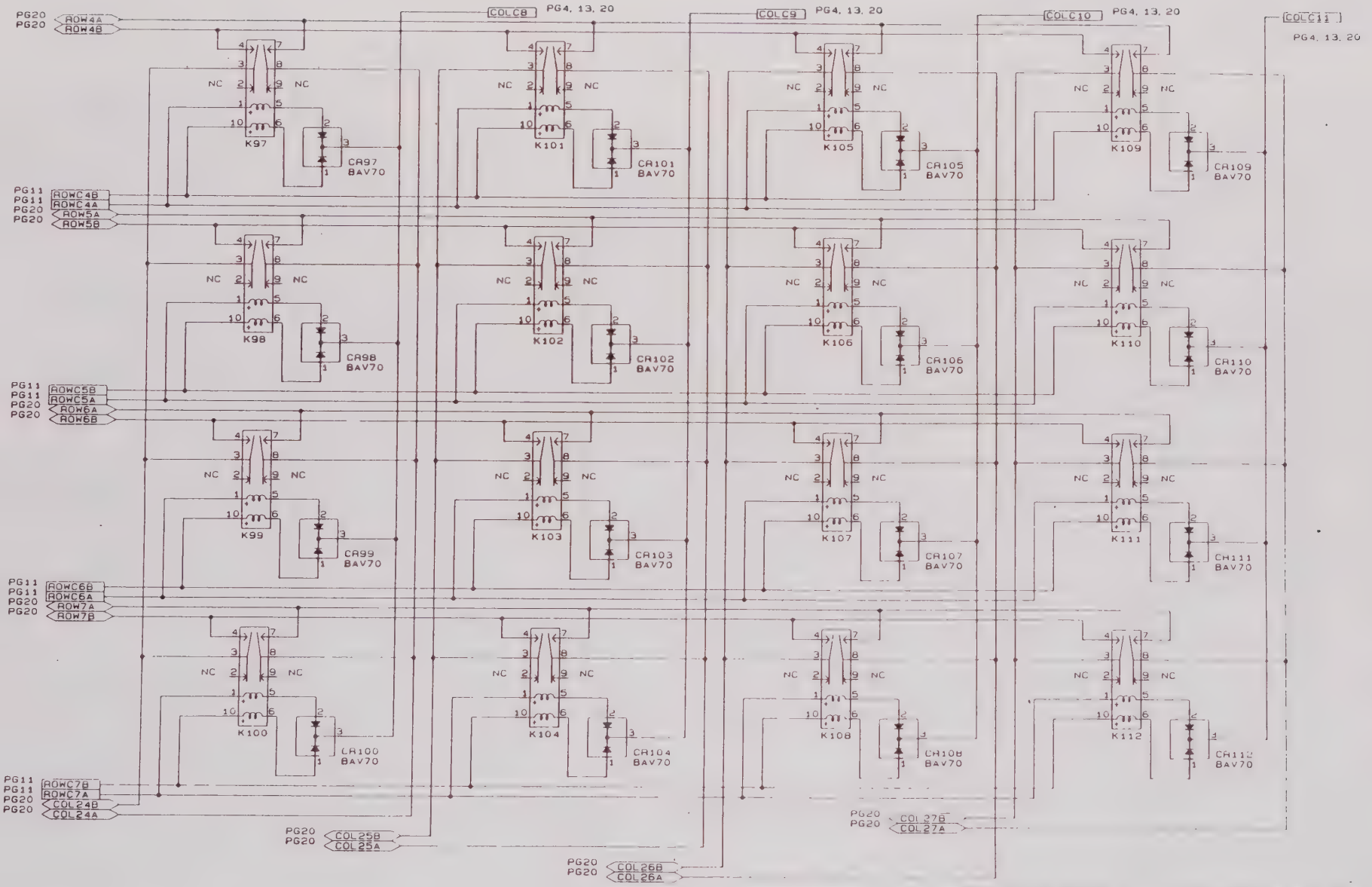

SIZE	CODE IDENT NO	DOCUMENT NO	REV
B	21793	1350-13	A
SCALE		SHEET 8 OF 21	

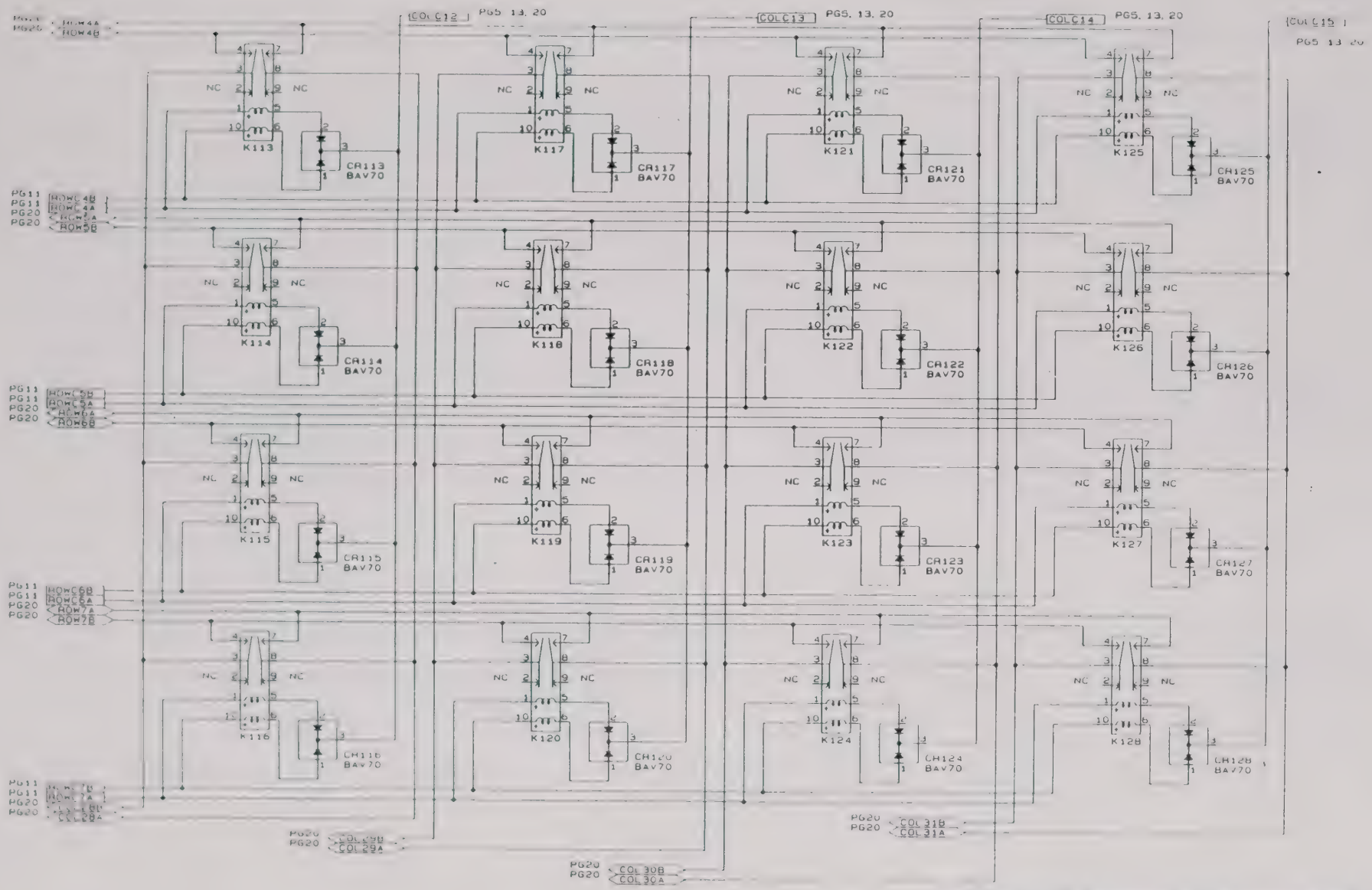

SIZE	CODE IDENT NO	DOCUMENT NO	REV
B	21793	[illegible]	A
SCALE		SHEET 9 OF 21	

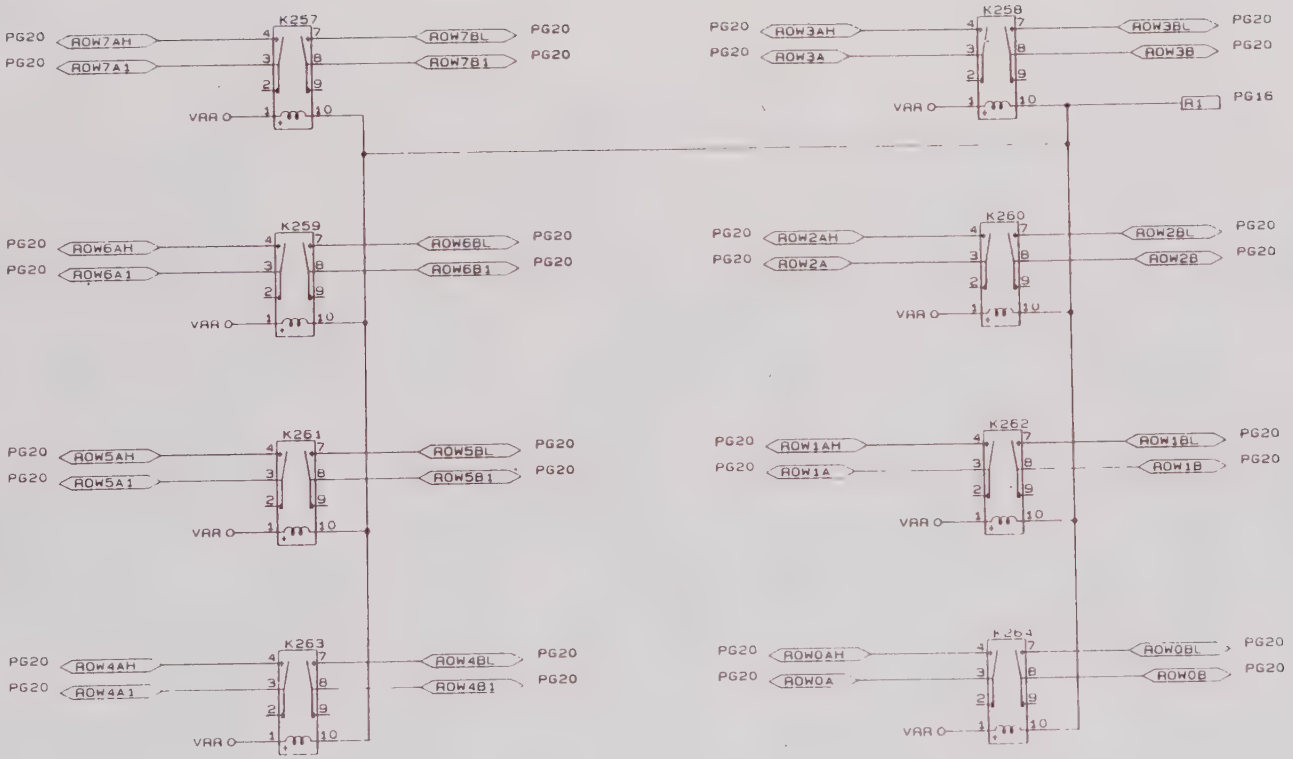

SIZE	CODE IDENT NO	DOCUMENT NO	REV
B	21793	[illegible]	A
SCALE		SHEET 10 OF 21	

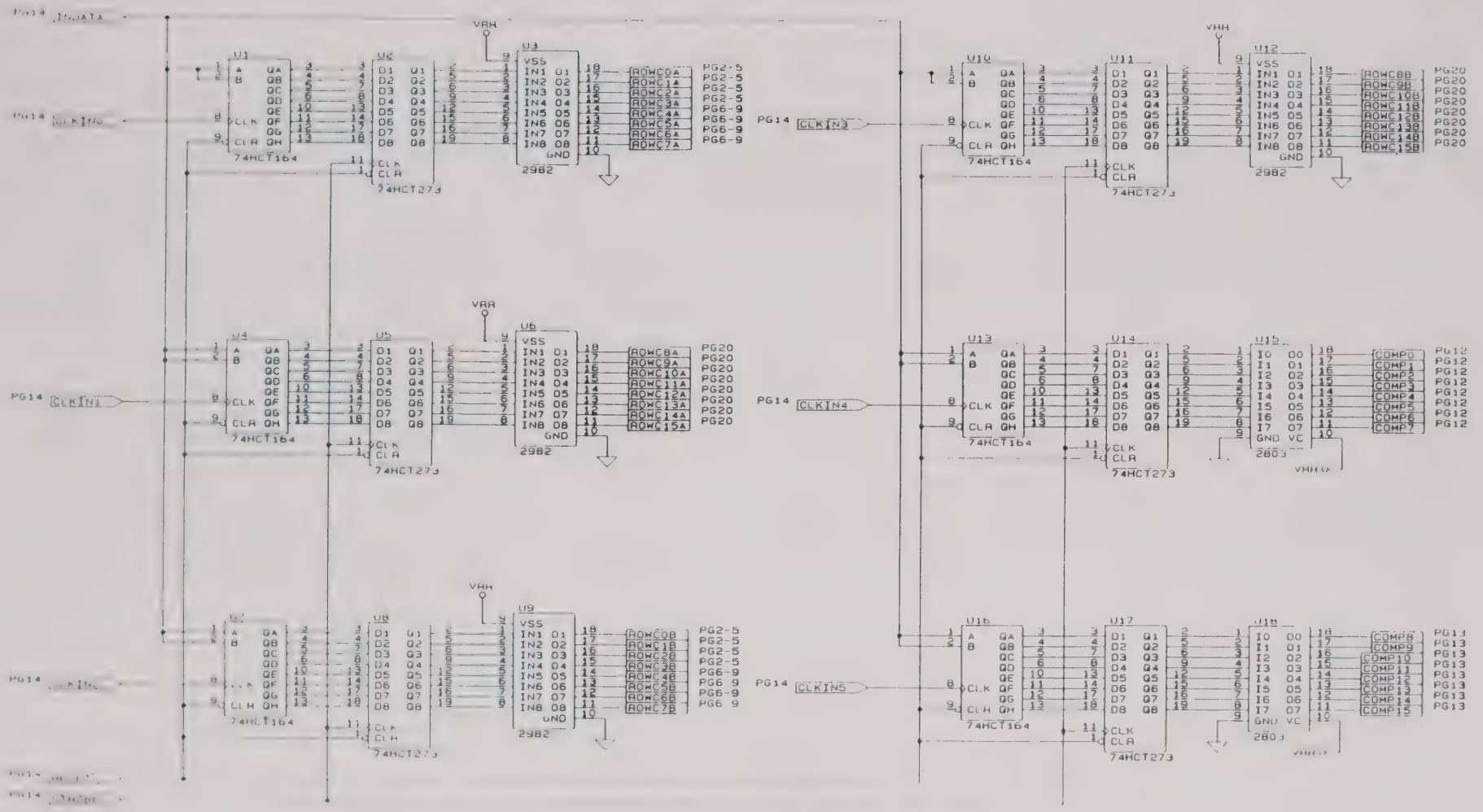

SIZE	CODE IDENT NO	DOCUMENT NO	REV
B	21793	435043	A
SCALE		SHEET 11 OF 21	

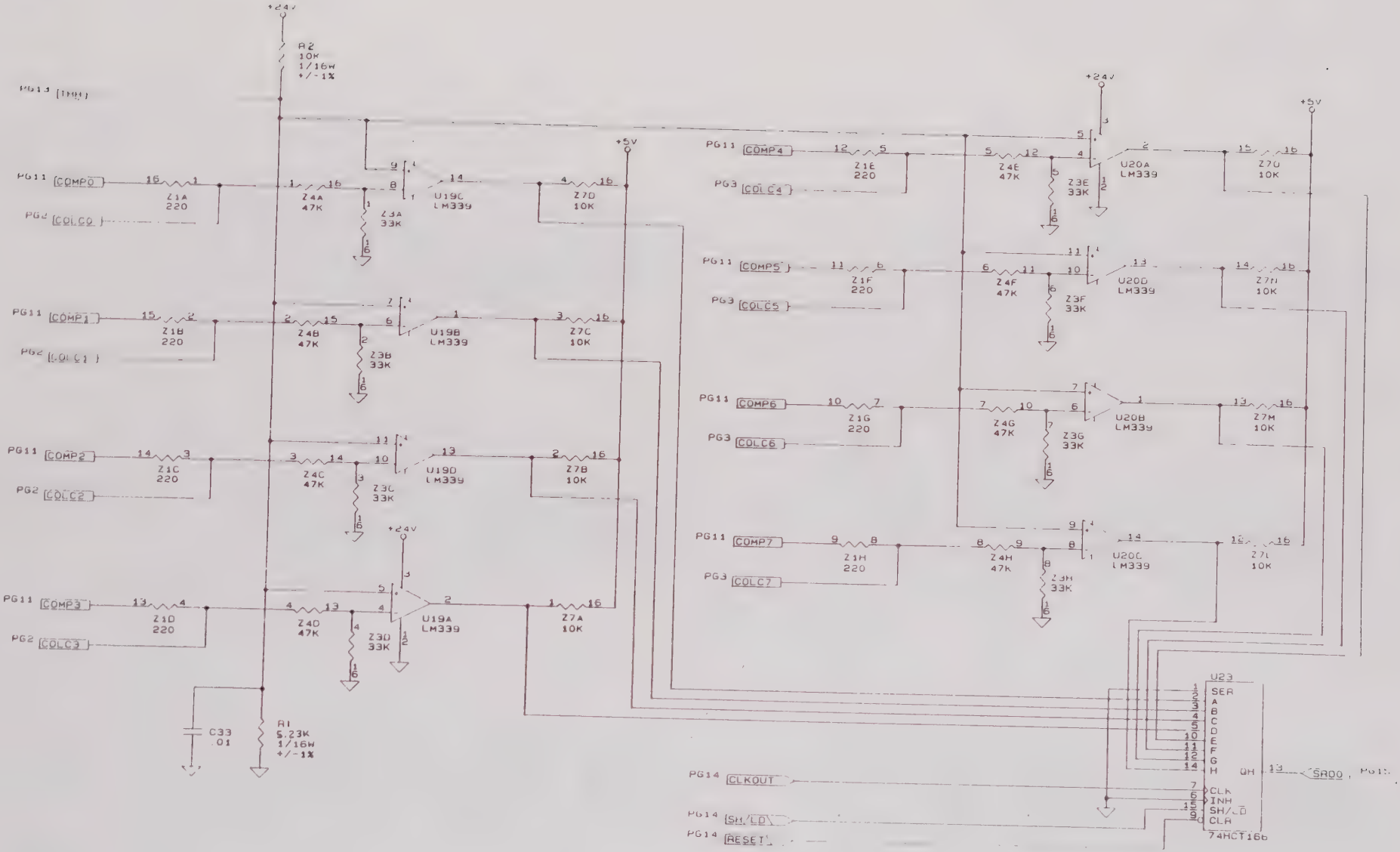

SIZE	CODE IDENT NO	DOCUMENT NO	REV
B	21793	435043	A
SCALE		SHEET 12 OF 21	

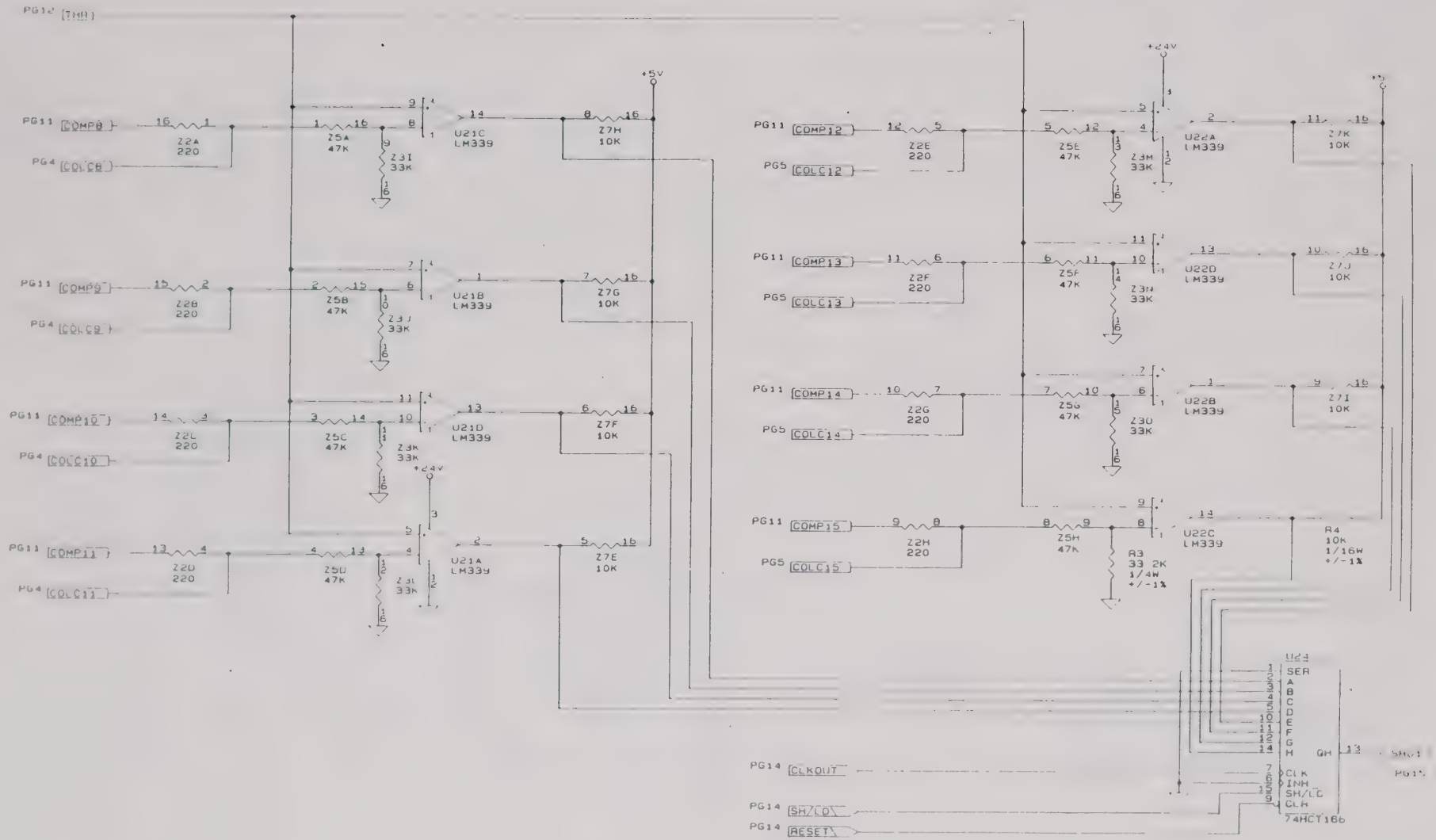

SIZE	CODE IDENT NO	DOCUMENT NO	REV
B	21793	[illegible]	A
SCALE		SHEET [illegible] OF [illegible]	

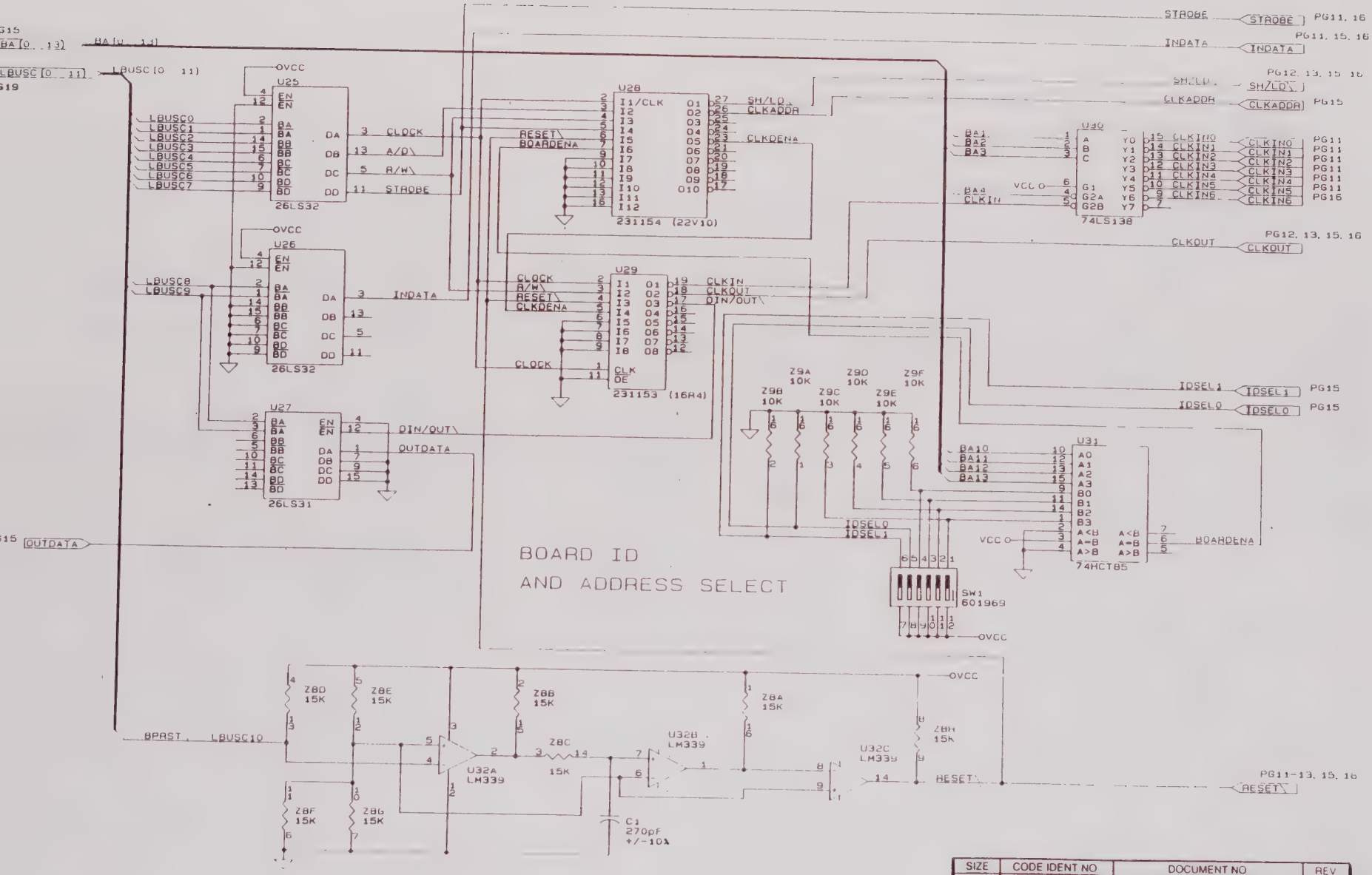

SIZE	CODE IDENT NO	DOCUMENT NO	REV
B	21793	13550-13	A
SCALE		SHEET 14 OF 21	

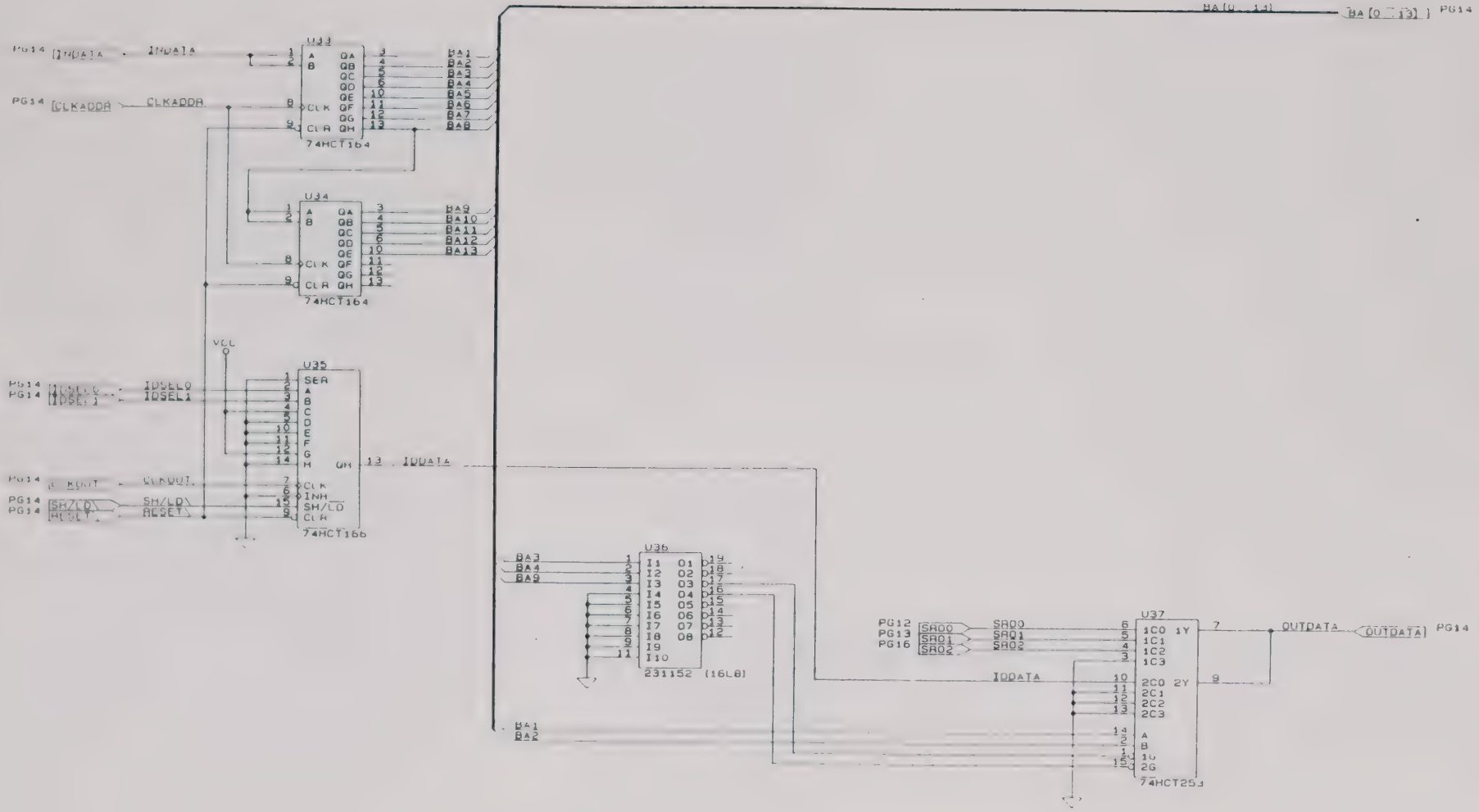

SIZE	CODE IDENT NO	DOCUMENT NO	REV
B	21793	[illegible]	A
SCALE		SHEET [illegible] OF [illegible]	

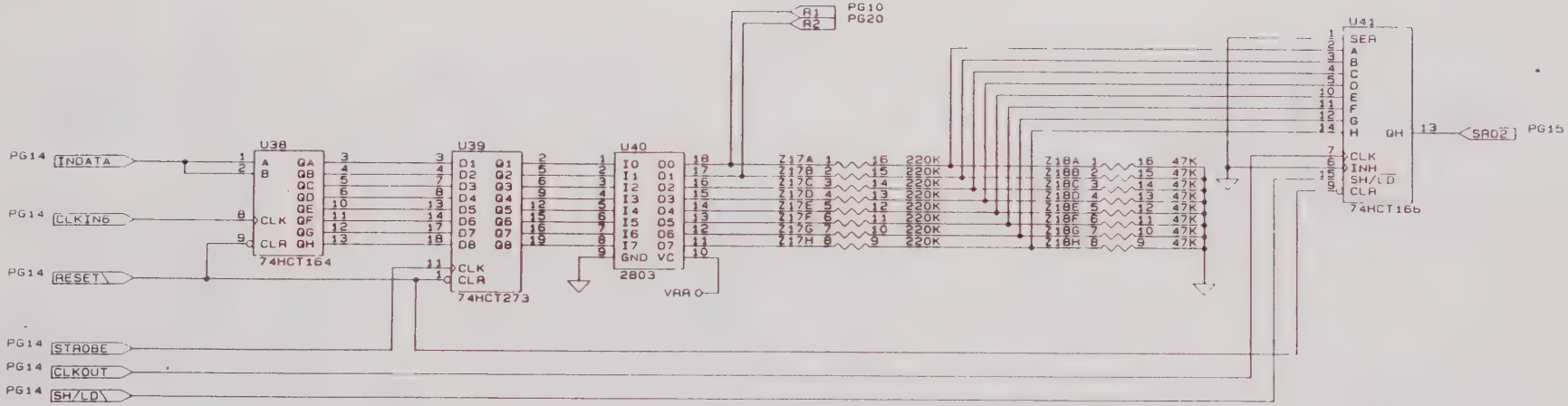

SIZE	CODE IDENT NO	DOCUMENT NO	REV
B	21793	435043	A
SCALE		SHEET 16 OF 21	

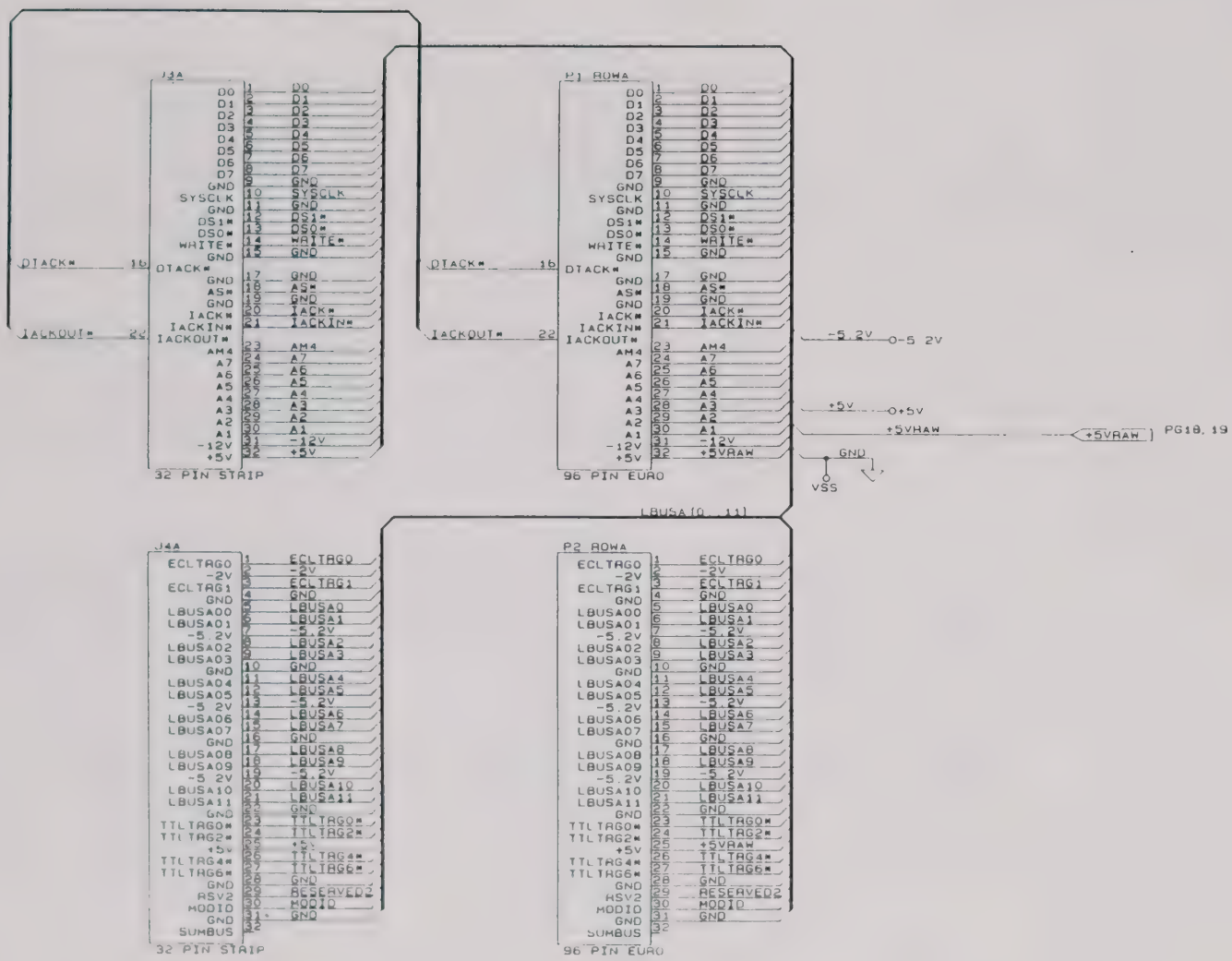

SIZE	CODE IDENT NO	DOCUMENT NO	REV
B	21793	[illegible]	A
SCALE		SHEET [illegible] OF [illegible]	

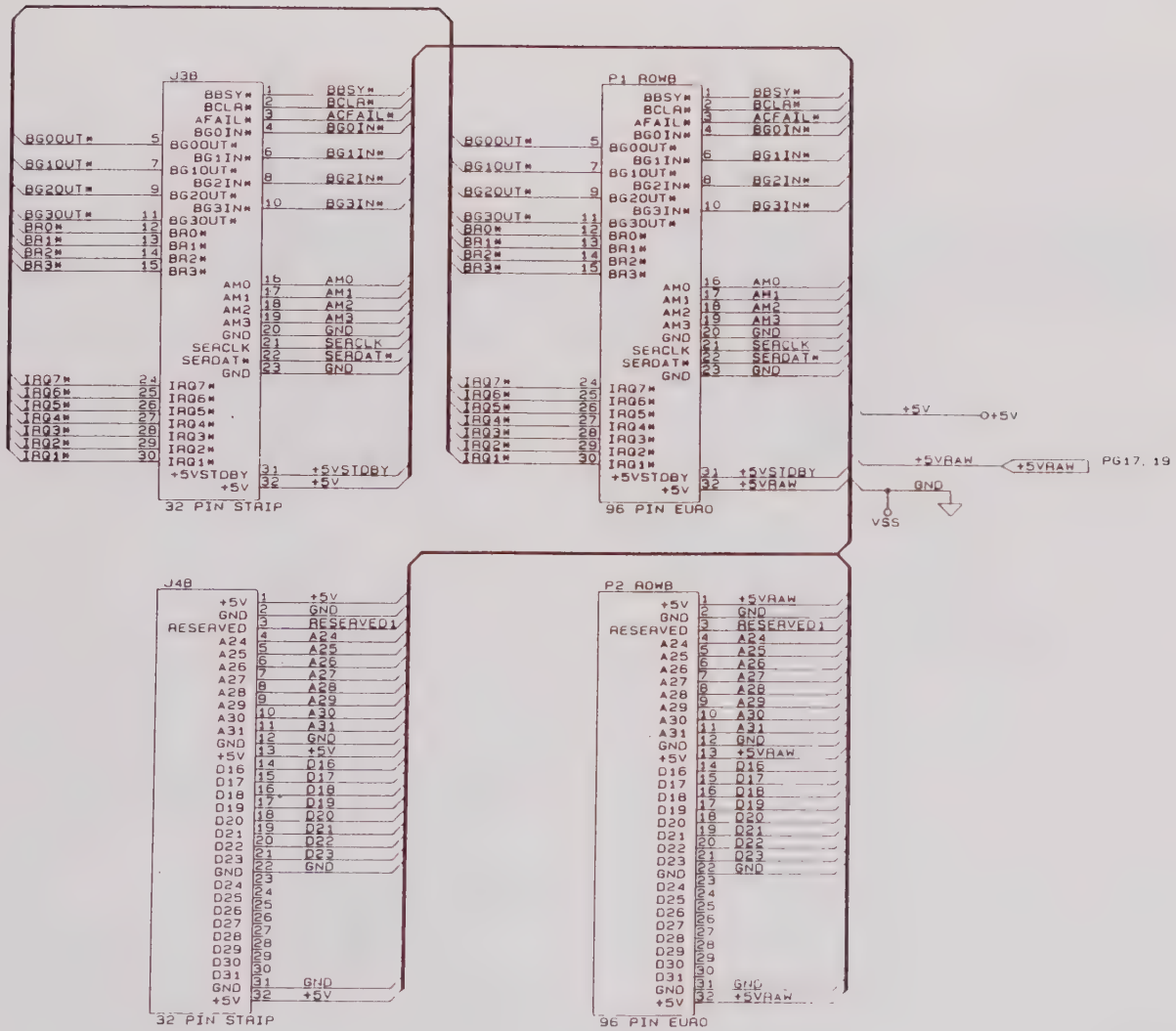

SIZE	CODE IDENT NO	DOCUMENT NO	REV
B	21793	435043	A
SCALE		SHEET 18 OF 21	

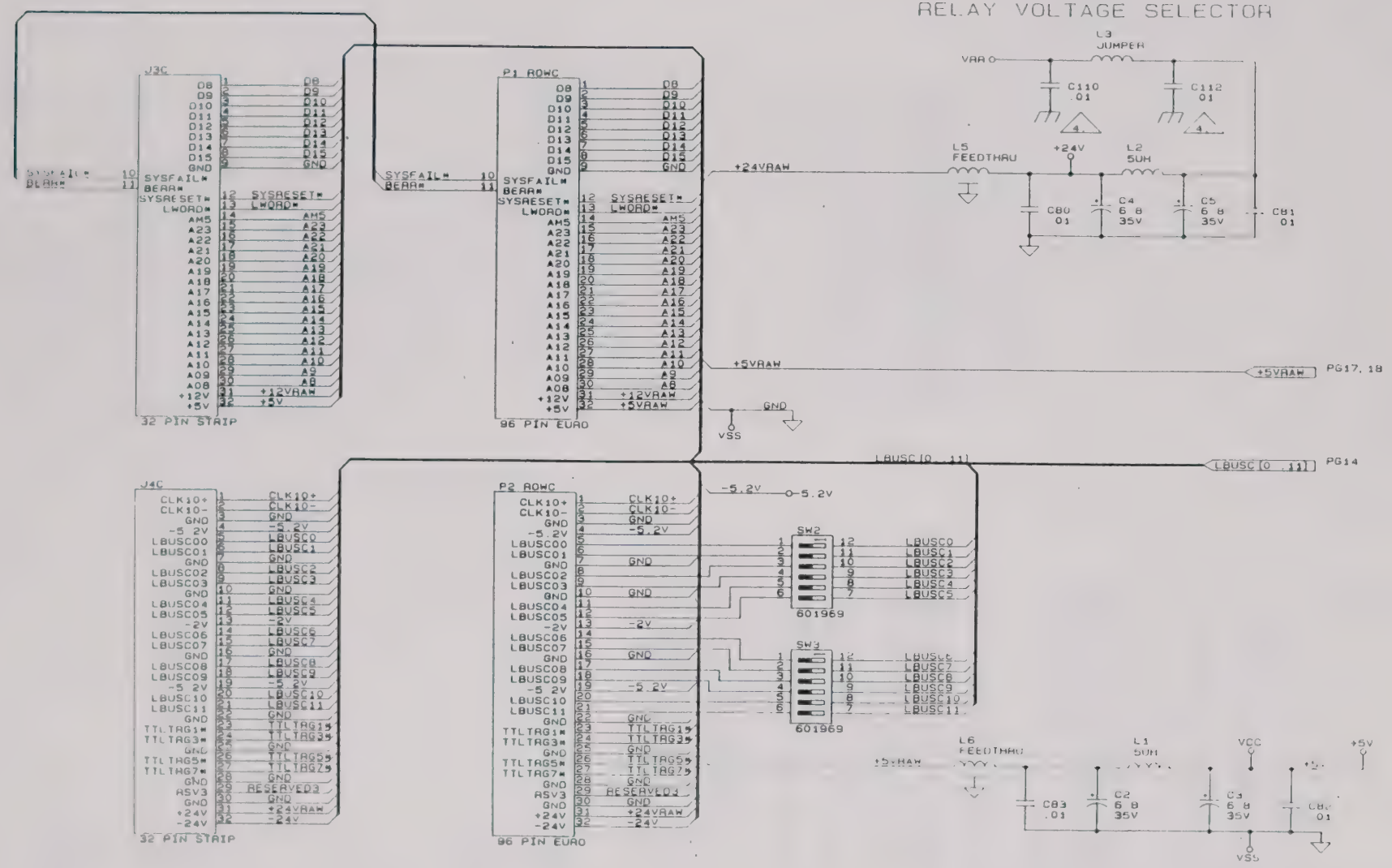

SIZE	CODE IDENT NO	DOCUMENT NO	REV
B	21793	43[illegible]	A
SCALE		SHEET [illegible] OF [illegible]	

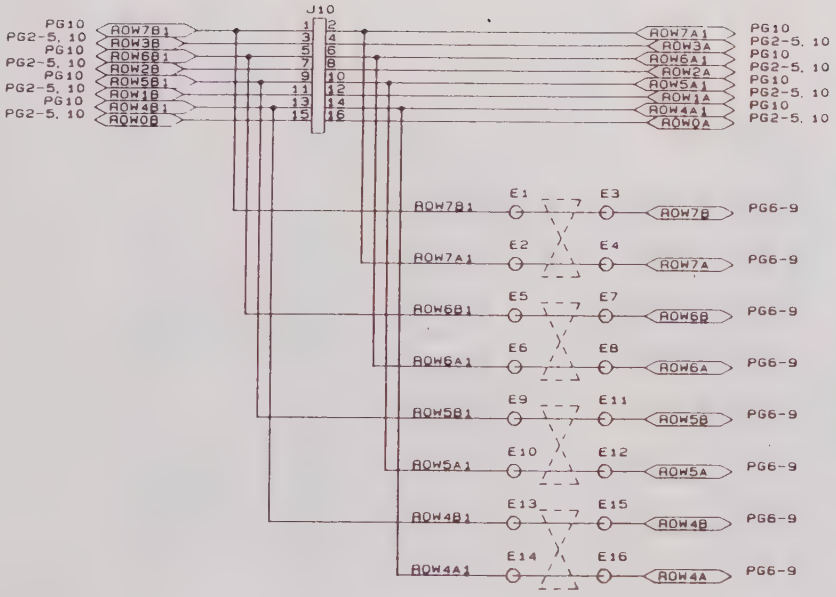

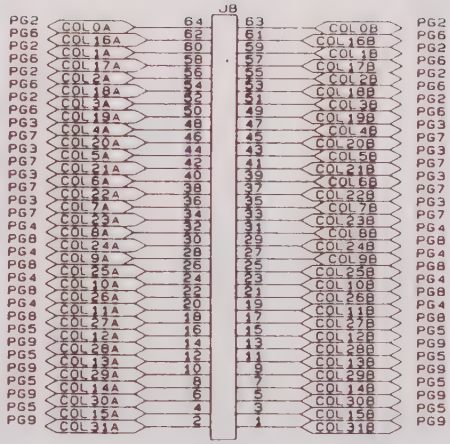

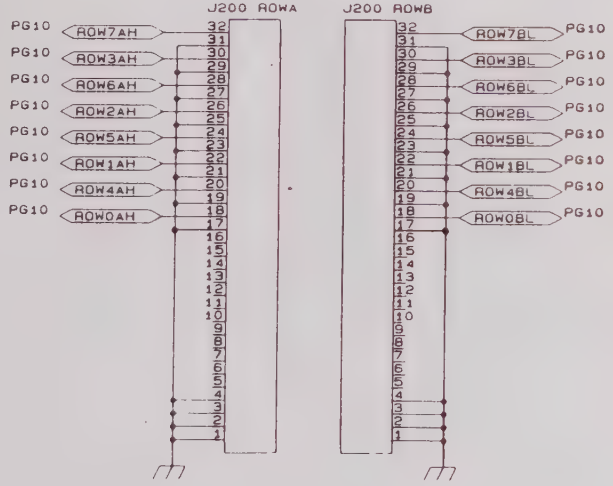

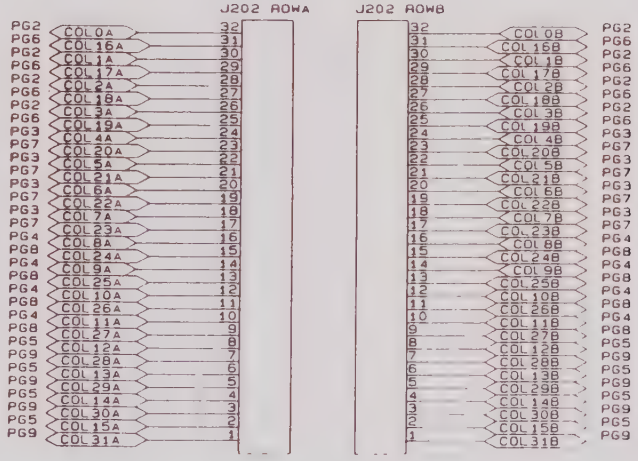

SIZE	CODE IDENT NO	DOCUMENT NO	REV
B	21793	435043	A
SCALE		SHEET 20 OF 21	

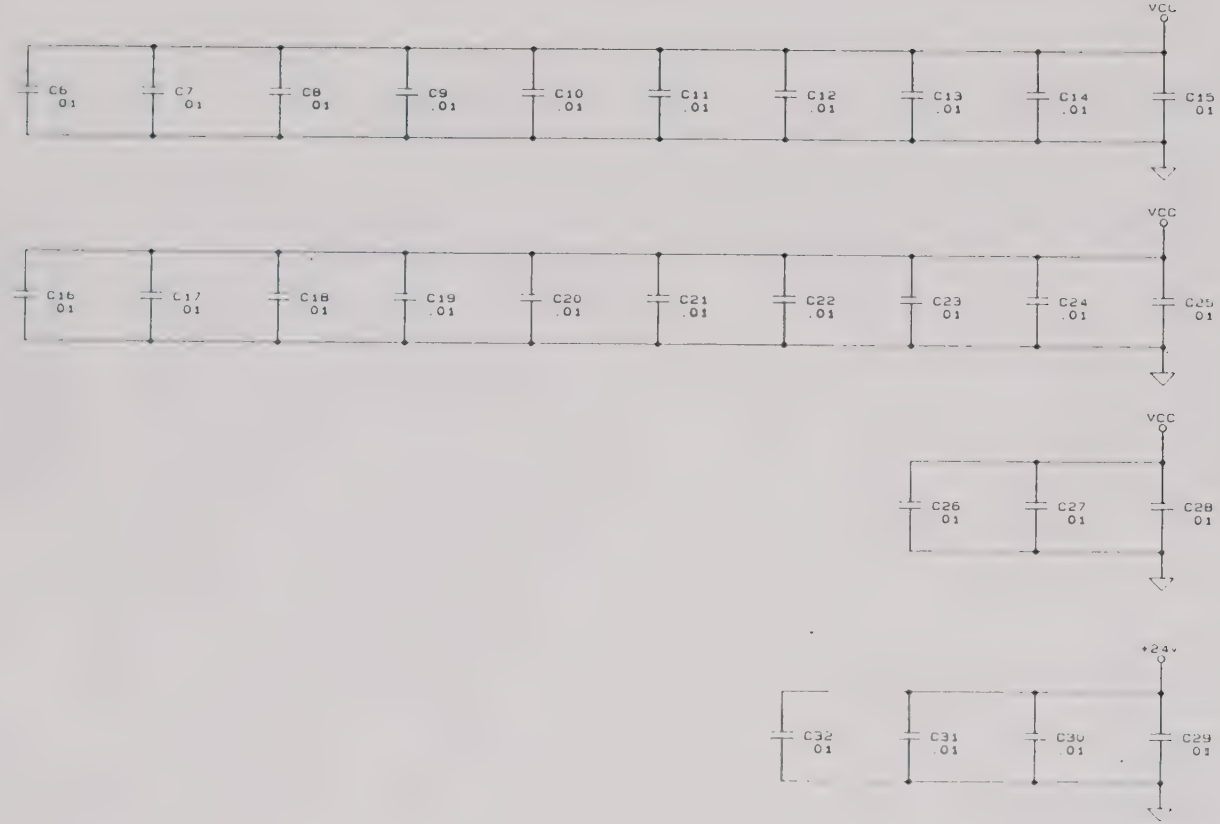

SIZE	CODE IDENT NO	DOCUMENT NO	REV
B	21793	[illegible]	A
SCALE		SHEET [illegible] OF [illegible]	

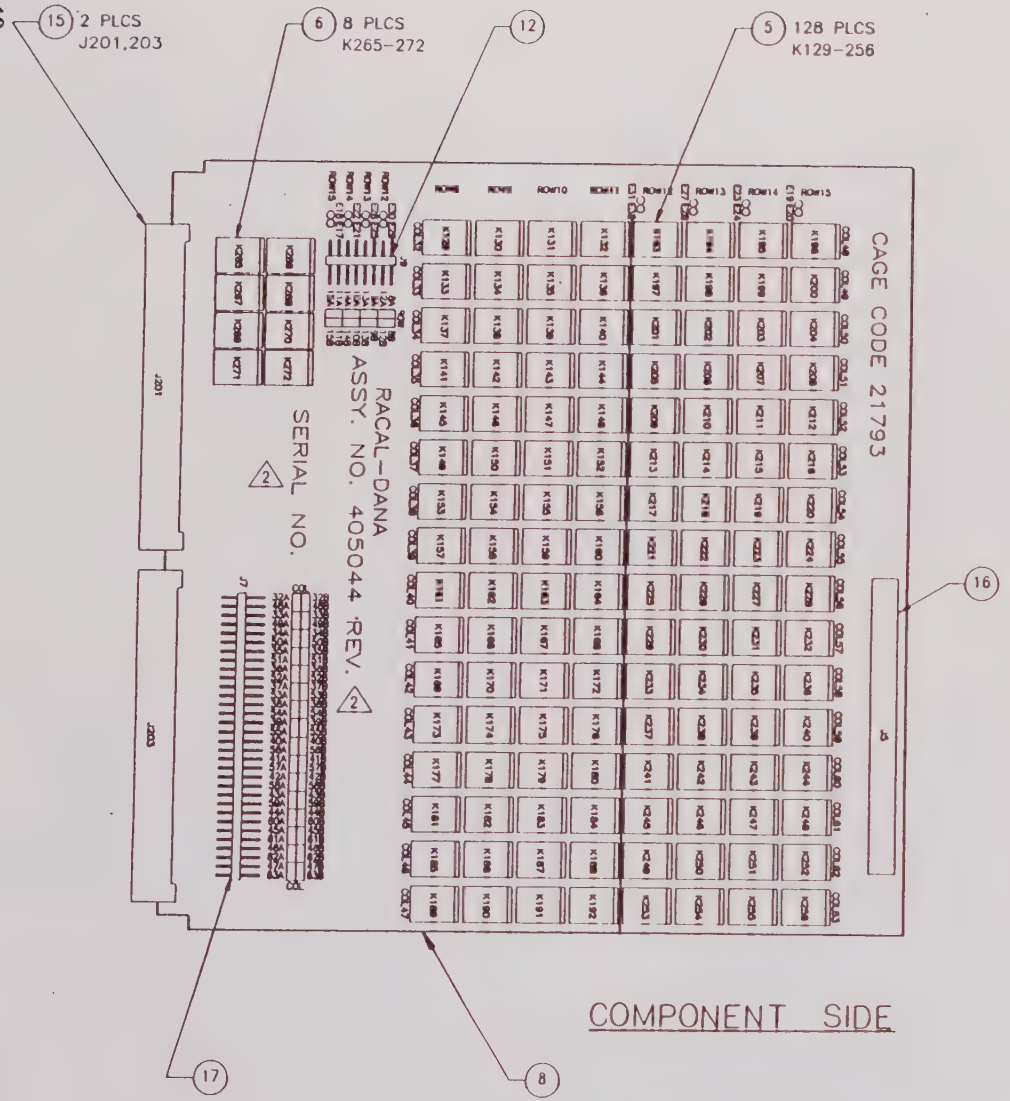

COMPONENT SIDE

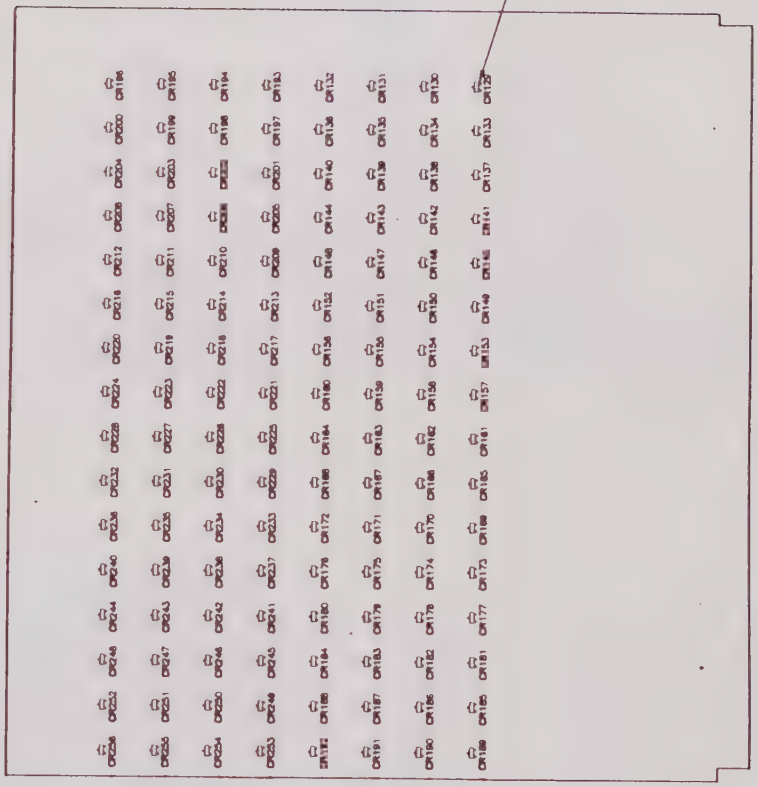

CIRCUIT SIDE

THIS DOCUMENT WAS CREATED AND BACKED UP BY ENGINEERINGS VALID ALLEGRO CAD SYSTEM. ALL REVISIONS ARE TO BE MADE ON THE VALID ALLEGRO SYSTEM IN ACCORDANCE WITH COMPANY POLICY FOR C.A.D DOCUMENTATION.

3. ALL SOLDER TAILS ON CIRCUIT SIDE OF PCB TO BE TRIMMED TO A MAX. OF .050.

2 INK STAMP SERIAL NUMBER AND CURRENT REVISION LETTER ON COMPONENT SIDE IN INDICATED AREAS.

1. REFERENCE SCHEMATIC 435044.

NOTES UNLESS OTHERWISE SPECIFIED

PROPRIETARY NOTICE

THIS DOCUMENT AND THE TECHNICAL DATA HEREON DISCLOSED ARE PROPRIETARY TO RACAL-DANA INSTRUMENTS INC. AND SHALL NOT WITHOUT EXPRESS WRITTEN PERMISSION OF RACAL DANA INSTRUMENTS INC. BE USED RELEASED OR DISCLOSED IN WHOLE OR IN PART OR USED TO SOLICIT QUOTATIONS FROM A COMPETITIVE SOURCE OR USED FOR MANUFACTURE BY ANYONE OTHER THAN RACAL-DANA INSTRUMENTS INC. THE INFORMATION HEREON HAS BEEN DEVELOPED AT PRIVATE EXPENSE AND MAY ONLY BE USED FOR PURPOSES OF ENGINEERING EVALUATION AND FOR INCORPORATION INTO TECHNICAL SPECIFICATIONS AND OTHER DOCUMENTS WHICH SPECIFY PROCUREMENT OF PRODUCTS FROM RACAL DANA INSTRUMENTS INC.

RACAL-DANA Instruments Inc.			
4 GOODYEAR, IRVINE, CALIFORNIA 92714			
DOCUMENT TITLE			
PCB ASSY,1260-45D			
SIZE	CODE IDENT NO	DOCUMENT NO	REV
D	21793	405044	B
SCALE		SHEET 1 OF 3	

K272
J203
E32
CR256
HIGHEST REF DES

"THIS DOCUMENT WAS CREATED AND BACKED UP ON THE 'ORCAD/SDT III' CAD SYSTEM. ALL REVISIONS ARE TO BE MADE ON THE 'ORCAD/SDT III' SYSTEM IN ACCORDANCE WITH COMPANY POLICY FOR CAD DOCUMENTATION "

PROPRIETARY NOTICE

THIS DOCUMENT AND THE TECHNICAL DATA HEREON DISCLOSED ARE PROPRIETARY TO RACAL DANA INSTRUMENTS INC AND SHALL NOT WITHOUT EXPRESS WRITTEN PERMISSION OF RACAL DANA INSTRUMENTS INC BE USED RELEASED OR DISCLOSED IN WHOLE OR IN PART OR USED TO SOLICIT QUOTATIONS FROM A COMPETITIVE SOURCE OR USED FOR MANUFACTURE BY ANYONE OTHER THAN RACAL DANA INSTRUMENTS INC. THE INFORMATION HEREON HAS BEEN DEVELOPED AT PRIVATE EXPENSE AND MAY ONLY BE USED FOR PURPOSES OF ENGINEERING EVALUATION AND FOR INCORPORATION INTO TECHNICAL SPECIFICATIONS AND OTHER DOCUMENTS WHICH SPECIFY PROCUREMENT OF PRODUCTS FROM RACAL DANA INSTRUMENTS INC.

RACAL-DANA Instruments Inc.
4 GOODYEAR IRVINE, CALIFORNIA 92714

DOCUMENT TITLE

SCHEM, 1260-45D

SIZE	CODE IDENT NO	DOCUMENT NO	REV
B	21793	435044	A

SCALE — — | SHEET 1 OF 11

3 RELAYS K265 THRU K272 ARE RACAL DANA P/N 310197
2 RELAYS K129 THRU K256 ARE RACAL DANA P/N 310232
1 ALL RELAYS SHOWN IN DE-ENERGIZED POSITION

NOTES UNLESS OTHERWISE SPECIFIED

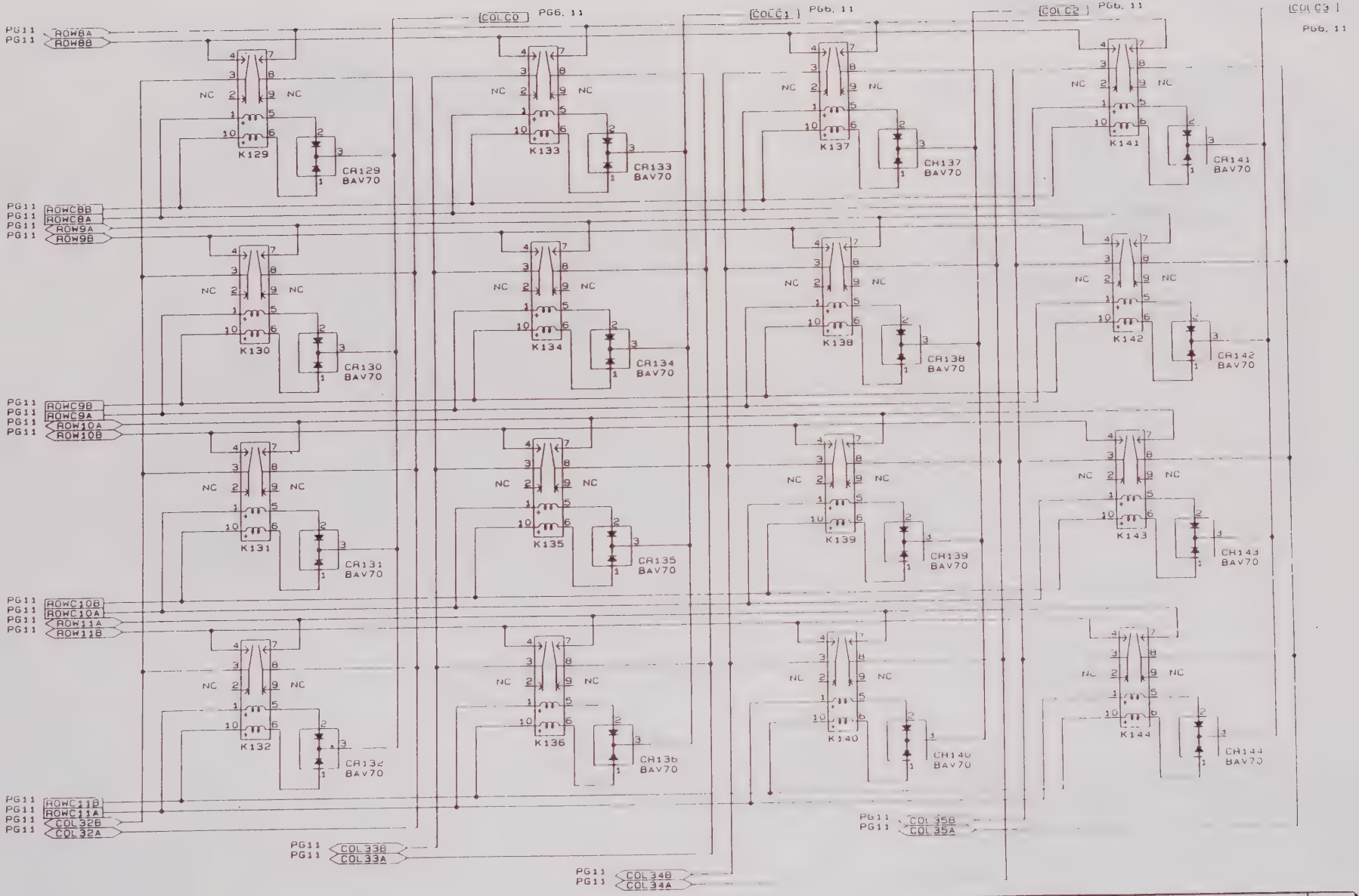

SIZE	CODE IDENT NO	DOCUMENT NO	REV
B	21793	435044	A
SCALE —		SHEET 2	OF 11

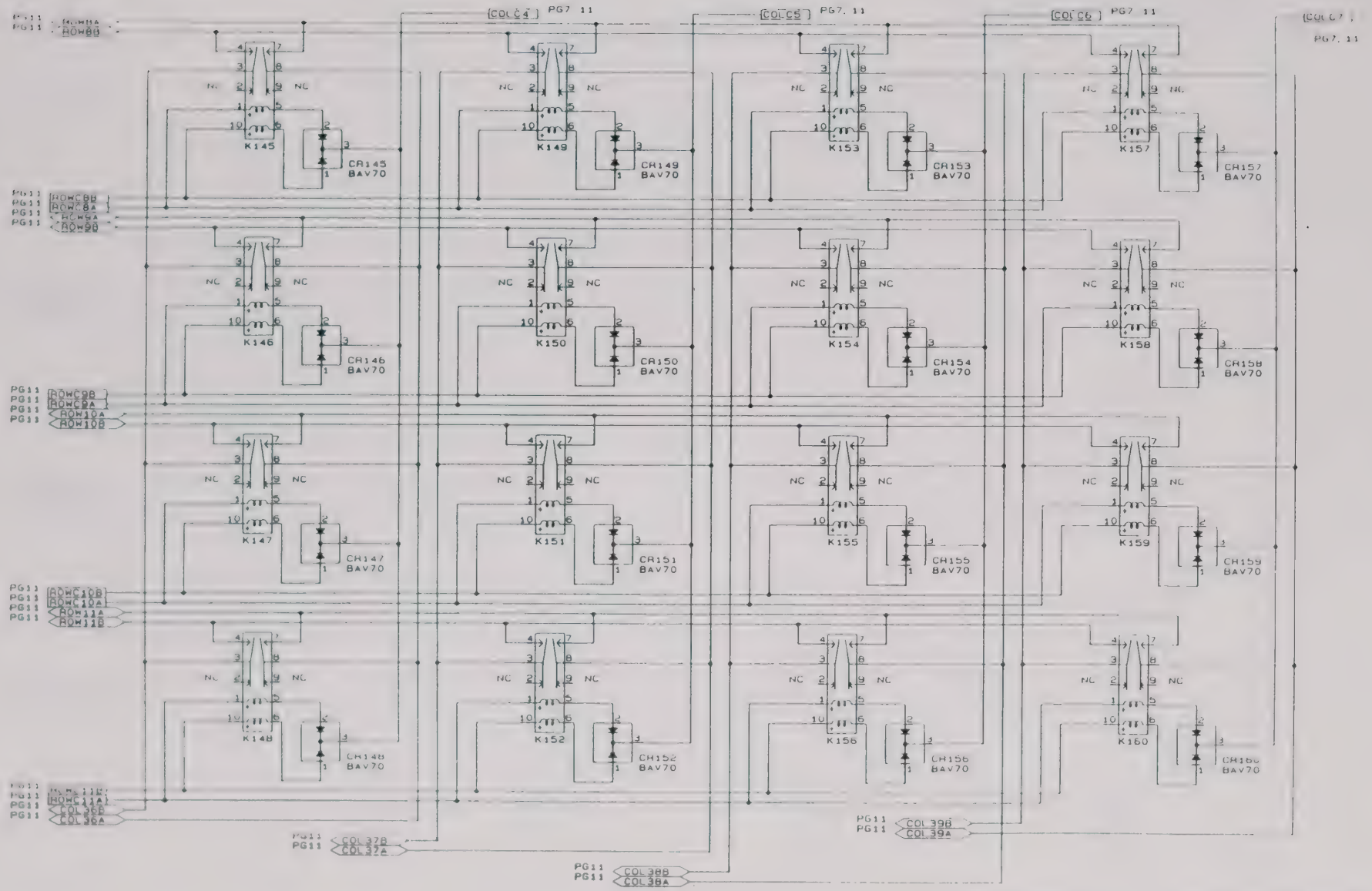

SIZE	CODE IDENT NO	DOCUMENT NO	REV
B	21793	435041	A
SCALE		SHEET 3 OF 11	

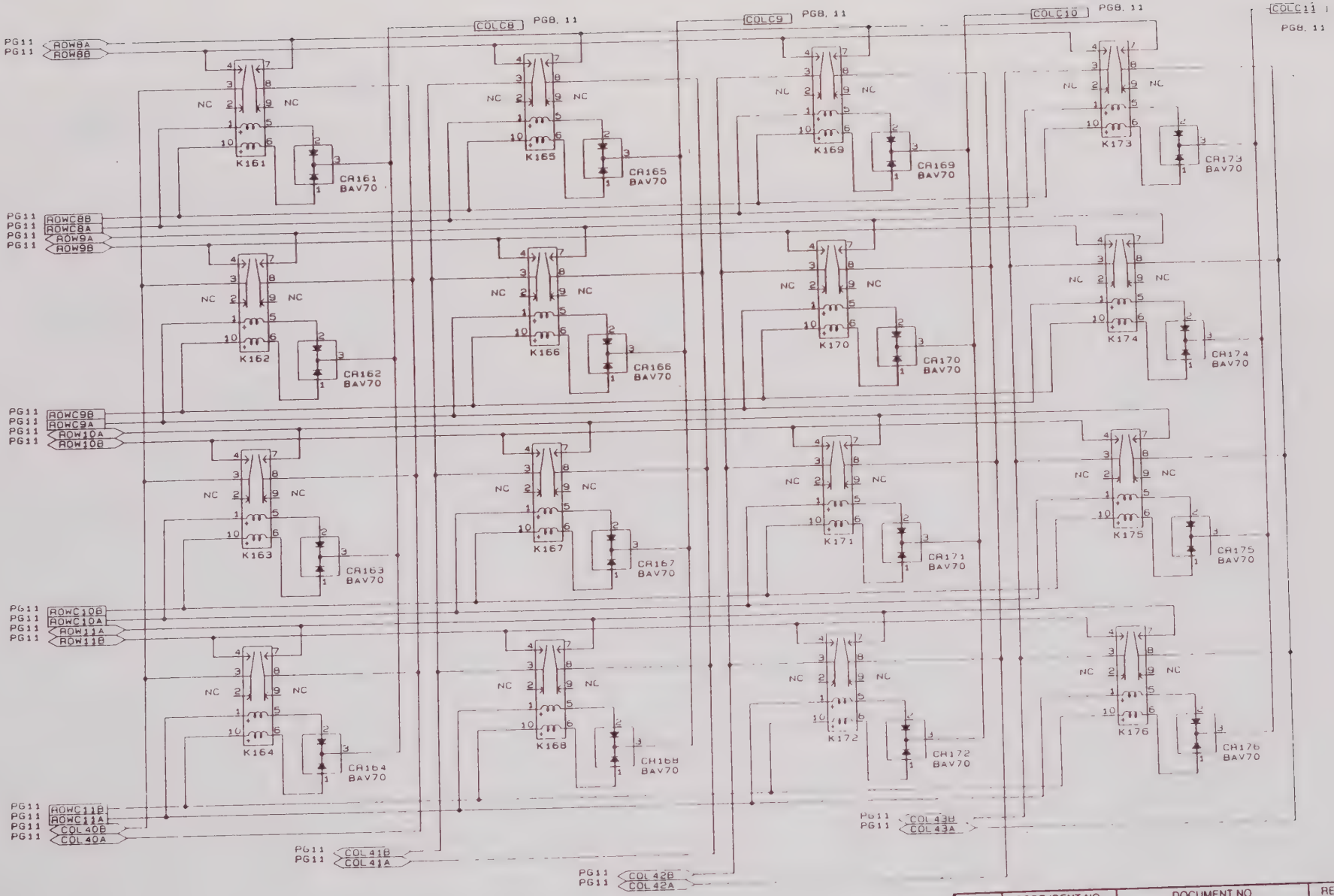

SIZE	CODE IDENT NO	DOCUMENT NO	REV
B	21793	435044	A
SCALE		SHEET 4	OF 11

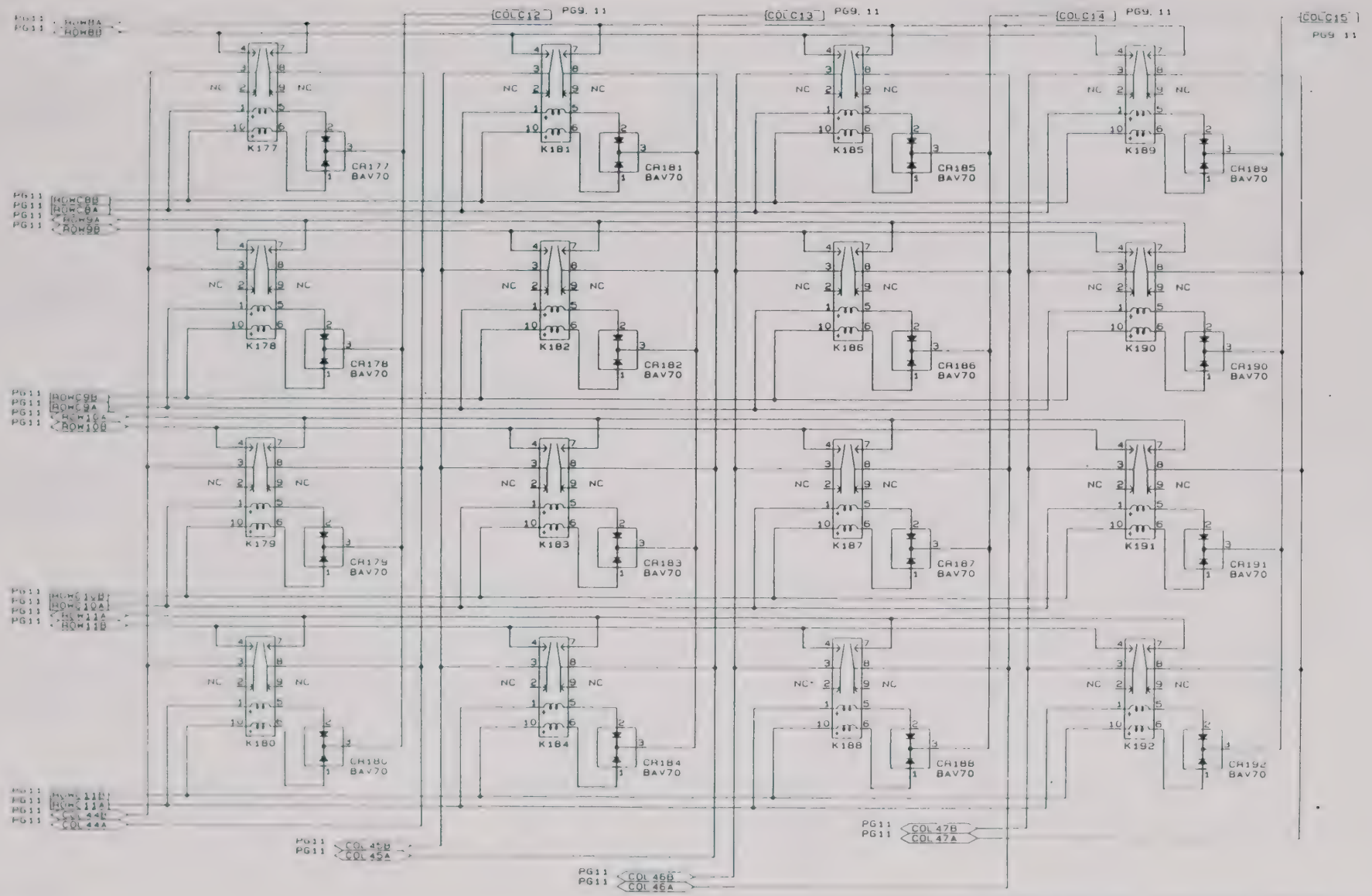

SIZE	CODE IDENT NO	DOCUMENT NO	REV
B	21793	435044	A
SCALE		SHEET 5 OF 11	

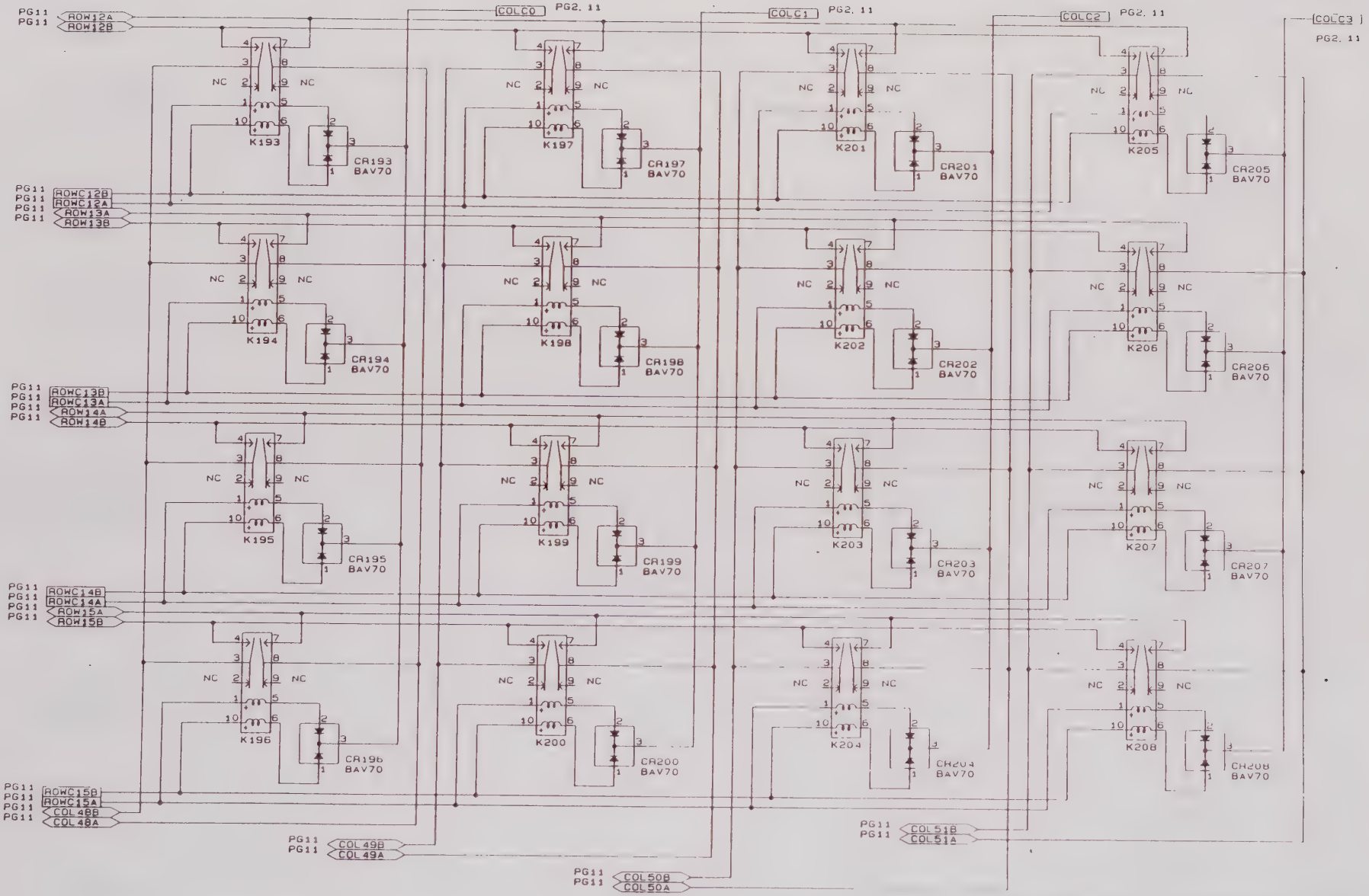

SIZE	CODE IDENT NO	DOCUMENT NO	REV
B	21793	435044	A
SCALE		SHEET 6 OF 11	

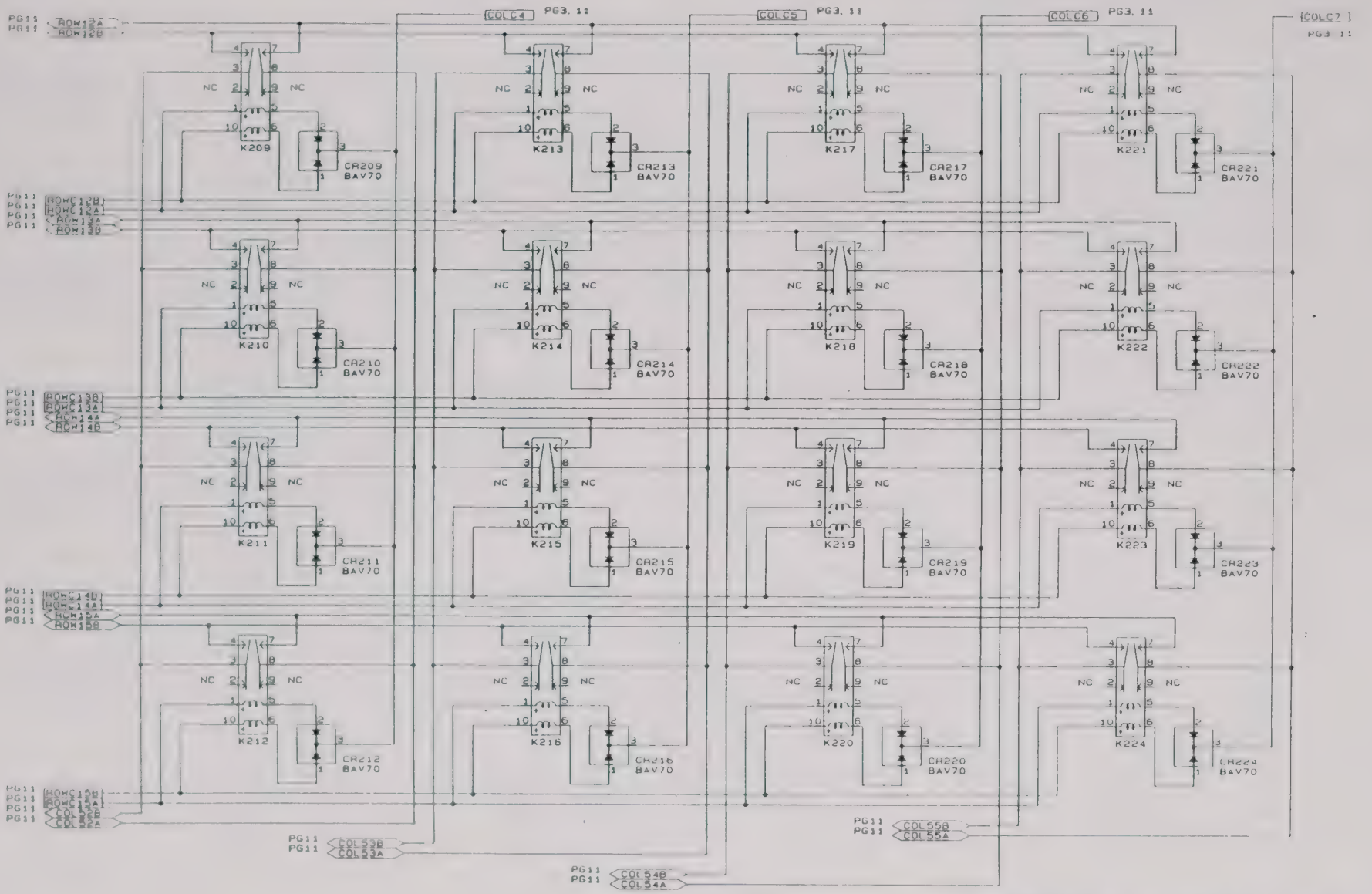

SIZE	CODE IDENT NO	DOCUMENT NO	REV
B	21793	435044	A
SCALE		SHEET 7 OF 11	

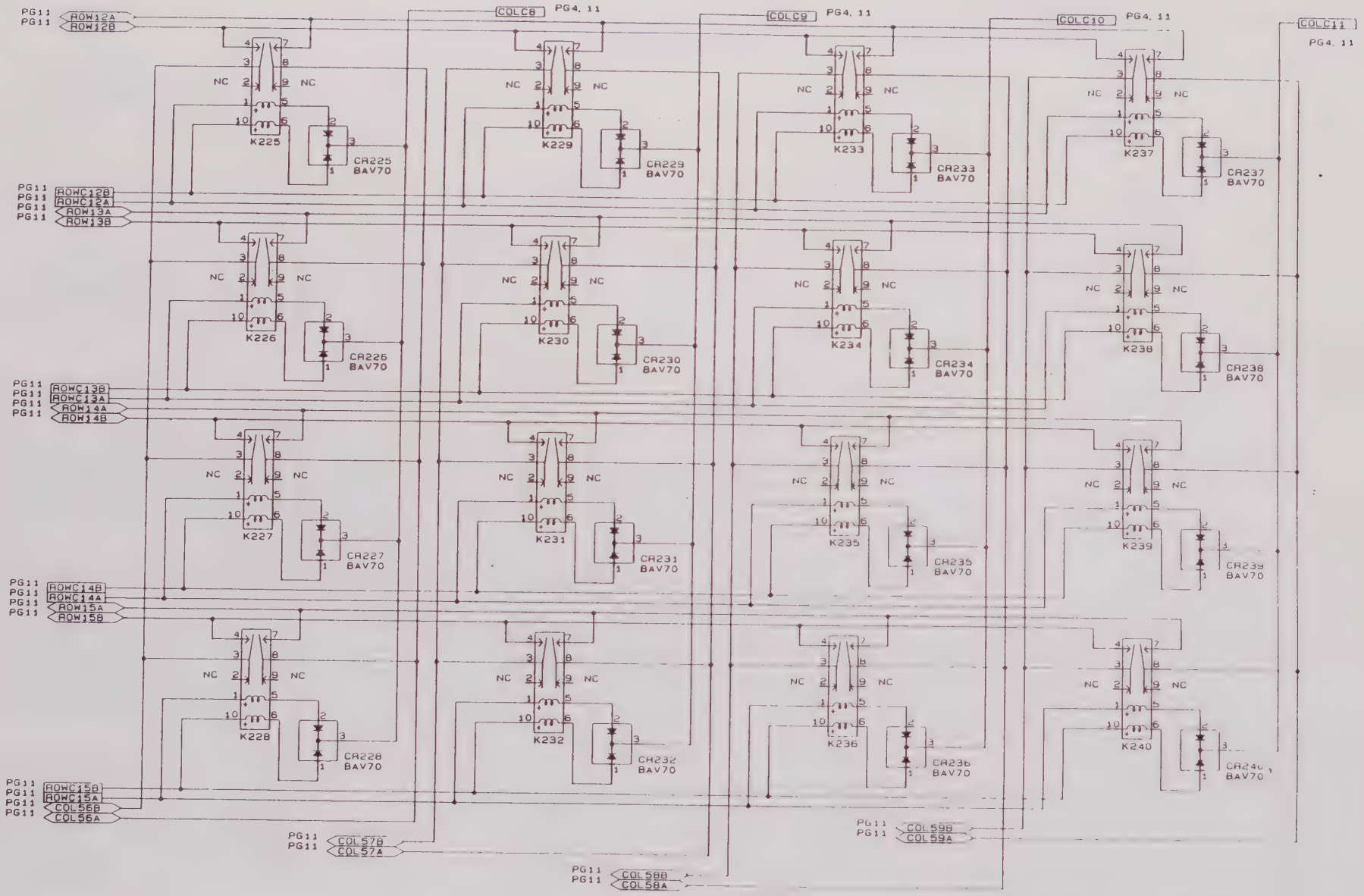

SIZE	CODE IDENT NO	DOCUMENT NO	REV
B	21793	435044	A
SCALE		SHEET 8 OF 11	

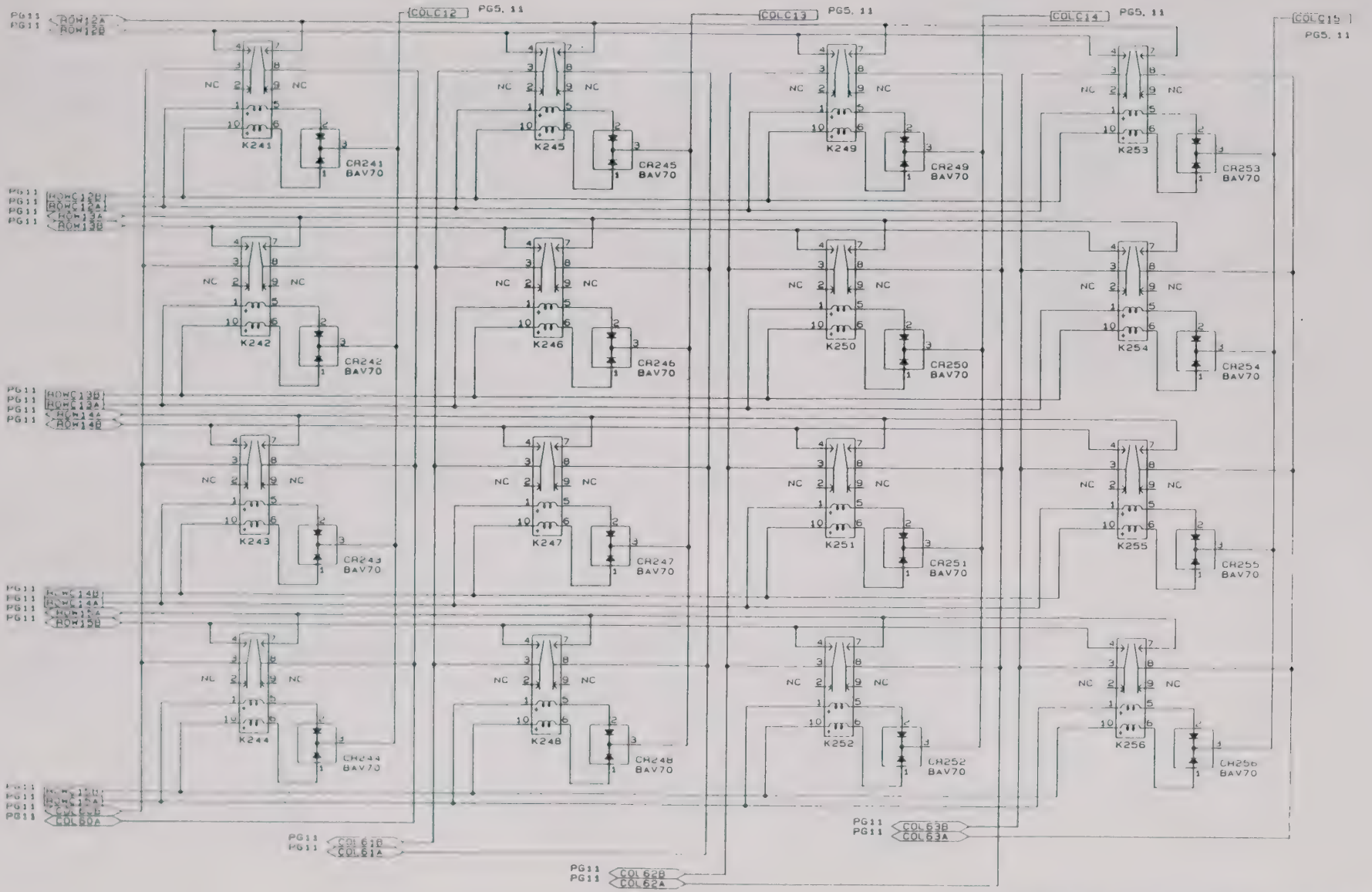

SIZE	CODE IDENT NO	DOCUMENT NO	REV
B	21793	435044	A
SCALE		SHEET 9 OF 11	

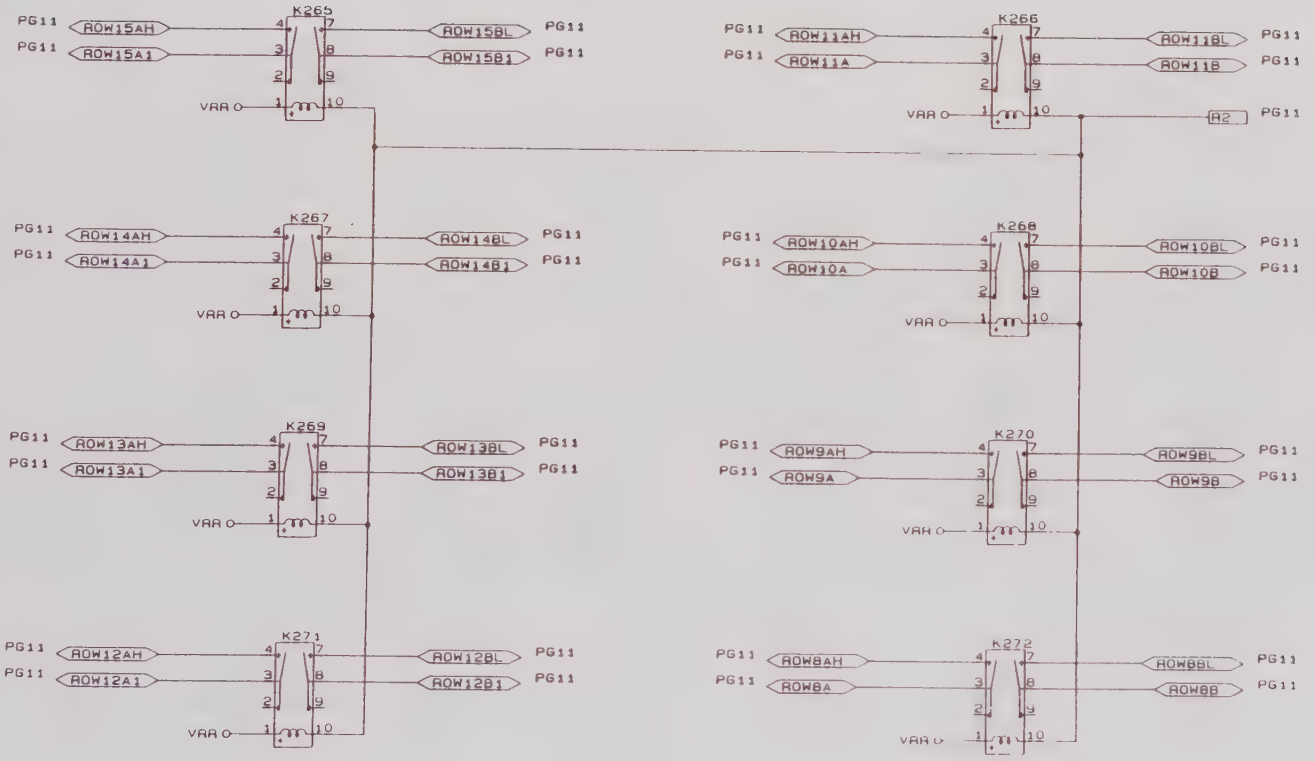

SIZE	CODE IDENT NO	DOCUMENT NO	REV
B	21793	435044	A
SCALE		SHEET 10 OF 11	

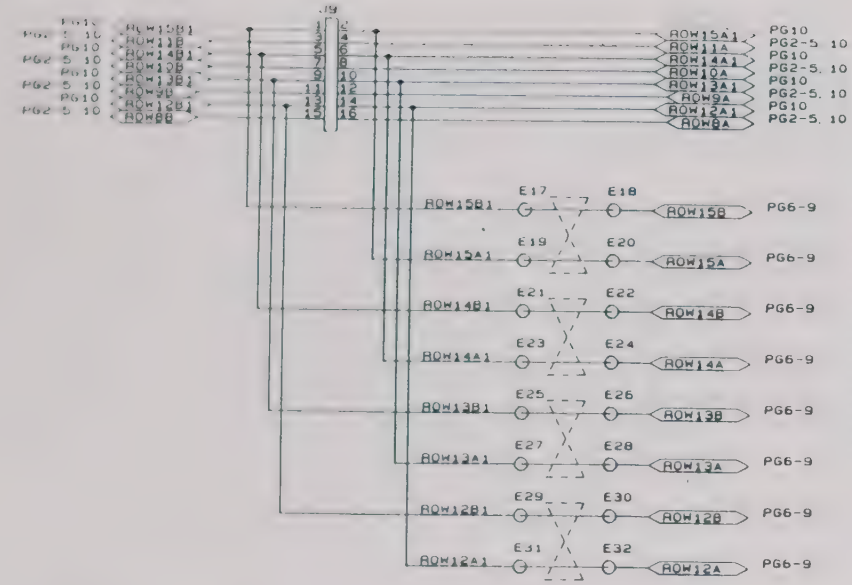

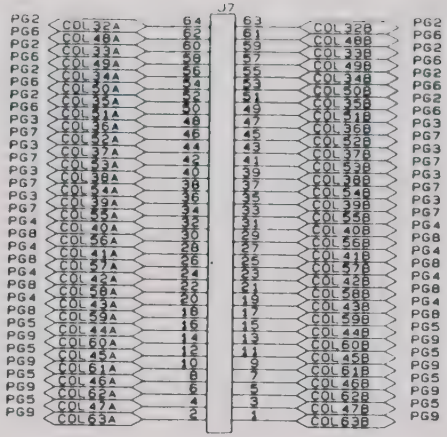

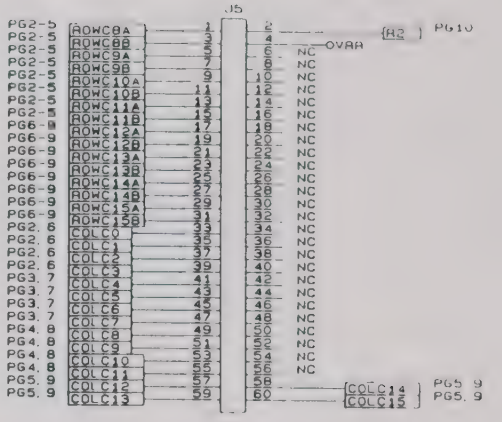

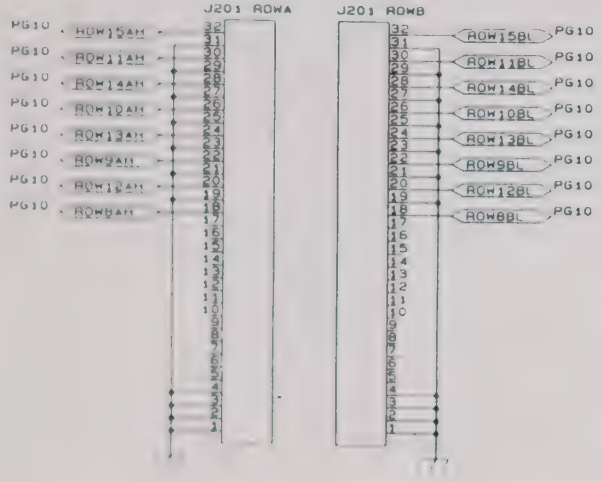

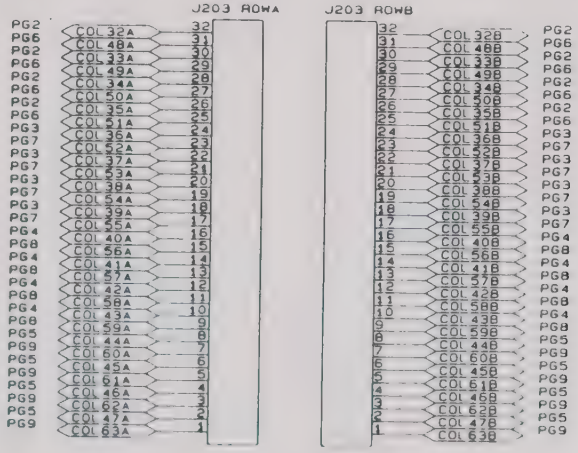

SIZE	CODE IDENT NO	DOCUMENT NO	REV
B	21793	435044	A
SCALE		SHEET 11 OF 11	

List of Suppliers

FSC	SUPPLIER
00779	AMP INC. HARRISBURG, PA
01295	TEXAS INSTRUMENTS INC. DALLAS, TX
01526	GENICOM CORP. WAYNESBORO, VA
02735	RCA (SOLID STATE DIV.) SOMERVILLE, NEW JERSEY
03508	GENERAL ELECTRIC CO. (SEMI-CONDUCTOR PRODUCTS) AUBURN, NY
04713	MOTOROLA INC. (SEMICONDUCTOR PRODUCTS DIV) PHOENIX, AZ
05397	UNION CARBIDE CORP (MATERIALS SYSTEMS DIV) CLEVELAND, OHIO
05972	LOCTITE CORP HARTFORD, CONN
06383	PANDUIT CORP TINLEY PARK, CA
06540	AMATOM ELECTRONIC HARDWARE NEW ROCHELLE, NY
06776	ROBINSON NUGENT INC. NEW ALBANY, IN
07263	FAIRCHILD (SEMICONDUCTOR DIV.) MOUNTAIN VIEW, CA
08261	SPECTRA-STRIP CORP GARDEN GROVE, CA
11236	CTS OF BERNE INC. BERNE, INDIANA
16956	DENNISON MFG. CO. FRAMINGTON, MA
18324	SIGNETICS INC. SUNNYVALE, CA
21793	RACAL-DANA INSTRUMENTS INC. IRVINE, CA
22526	DUPONT CONNECTOR CO. NEW CUMBERLAND, PA
27014	NATIONAL SEMI-CONDUCTOR CORP. SANTA CLARA, CA
29005	STORM PRODUCTS CO. LOS ANGELES, CA
34359	THREE (3) M CO. (COMMERCIAL TAPE DIV.) ST. PAUL, MN
52072	CIRCUIT ASSY. CORP. COSTA MESA, CA
52210	GETTING ENGRG & MFG. CO. SPRING MILLS, PA
53387	THREE (3) M CO. ST. PAUL, MN
55322	SAMTEC, INC. NEW ALBANY, IN
56289	SPAGUE ELECTRIC CO. N. ADAMS, MA
61529	AROMAT CORP. CUPERTINO, CA
62559	SCHROFF, INC. WARWICK, RI
65832	AMERICAN RESEARCH ENGRG ELGIN, IL
70903	BELDEN CORP. CHICAGO, IL
73138	BECKMAN INSTRUMENTS FULLERTON, CA
73445	AMPEREX ELECTRONIC CORP. HICKSVILLE, NY
78189	ILLINOIS TOOL WORKS, INC. (SHAKEPROOF, DIV.) ELGIN, IL
81349	MILITARY SPECIFICATION
86928	SEASTROM MFG CO. INC. GLENDALE, CA
91637	DALE ELECTRONICS INC. COLUMBUS, NEBRASKA
92194	ALPHA WIRE ELIZABETH, NEW JERSEY
95275	VITRAMON, INC. BRIDGEPORT, CONNECTICUT
98291	SEALECTRO CORP. MAMARONECK, NY

407052-001 FINAL ASSY., 1260-45A

REF DESIG	RACAL-DANA P/N	DESCRIPTION	FSC	MANUFACTURER'S P/N
{1}1	405043	PCB ASSY., 1260-45	21793	405043
{2}1	405044	PCB ASSY., 1260-45D	21793	405044
{5}1	455901	PANEL, RIGHT SIDE	21793	455901
{6}1	455779-003	PANEL, SIDE, LEFT	21793	455779-003
{7}1	455781	PANEL, REAR, SINGLE	21793	455781
{8}1	455784-001	PANEL, VXI TOP	21793	455784-001
{9}1	455784-002	PANEL, VXI BOTTOM	21793	455784-002
{10}1	455814-001	PANEL, FRONT, 1260-45	21793	455814-001
{22}1	611264	HANDLE, EXTRACTOR, BOTTOM	62559	20817-327
{23}1	611265	HANDLE, EXTRACTOR, TOP	62559	20817-328
{24}.5	611266	MOUNTING HARDWARE, HANDLE	62559	21100-745
{25}31	615539	SCREW, PFH, 4-40X. 125	-	-
{27}2	616405	SCREW, PFH, M2.5-.45 X 12	-	-
{28}8	616480	SCREW, PFH, 4-40 X .375	-	-
{29}7	616251	SCREW, PPH, SEMS ASSY, 4-40X.250	78189	-
{31}1	920710	LABEL, IDENIFICATION	21793	920710
{32}1	921212-019	LABEL, VXI, 1260-45	21793	921212-019
{33}A/R	920962	LOCTITE, 242, MED STR.	05972	272
{35}1	921059	LABEL, CAUTION, STATIC	21793	921059
{36}1	921148	LABEL SET, VXI-VME	21793	921148
{38}1	407051	SHIPPING KIT, 1260-45	21793	407051

407052-002 FINAL ASSY., 1260-45B

REF DESIG	RACAL-DANA P/N	DESCRIPTION	FSC	MANUFACTURER'S P/N
{1}1	405043	PCB ASSY., 1260-45	21793	405043
{2}1	405044	PCB ASSY., 1260-45D	21793	405044
{5}1	455901	PANEL, RIGHT SIDE	21793	455901
{6}1	455779-003	PANEL, SIDE, LEFT	21793	455779-003
{7}1	455781	PANEL, REAR, SINGLE	21793	455781
{8}1	455784-001	PANEL, VXI, TOP	21793	455784-001
{9}1	455784-002	PANEL, VXI, BOTTOM	21793	455784-002
{10}1	455814-001	PANEL, FRONT, 1260-45	21793	455814-001
{12}16	601195	PLUG, JUMPER, 0.1 CTR, LOW PROFILE	00779	530153-2
{22}1	611264	HANDLE, EXTRACTOR, BOTTOM	62559	20817-327
{23}1	611265	HANDLE, EXTRACTOR, TOP	62559	20817-328
{24}.5	611266	MOUNTING HARDWARE, HANDLE	62559	21100-745
{25}31	615539	SCREW, PFH, 4-40X. 125	-	-
{27}2	616405	SCREW, PFH, M2.5-.45 X 12	-	-
{28}8	616480	SCREW, PFH, 4-40 X .375	-	-
{29}7	616251	SCREW, PPH, SEMS ASSY, 4-40X.250	78189	-
{31}1	920710	LABEL, IDENIFICATION	21793	920710
{32}1	921212-019	LABEL, VXI, 1260-45	21793	921212-019
{33}A/R	920962	LOCTITE, 242, MED STR.	05972	272
{35}1	921059	LABEL, CAUTION, STATIC	21793	921059
{36}1	921148	LABEL SET, VXI-VME	21793	921148
{38}1	407051	SHIPPING KIT, 1260-45	21793	407051

407052-003 FINAL ASSY., 1260-45C

REF DESIG	RACAL-DANA P/N	DESCRIPTION	FSC	MANUFACTURER'S P/N
{1}1	405043	PCB ASSY., 1260-45	21793	405043
{2}1	405044	PCB ASSY., 1260-45D	21793	405044
{5}1	455901	PANEL, RIGHT SIDE	21793	455901
{6}1	455779-003	PANEL, SIDE, LEFT	21793	455779-003
{7}1	455781	PANEL, REAR, SINGLE	21793	455781
{8}1	455784-001	PANEL, VXI TOP	21793	455784-001
{9}1	455784-002	PANEL, VXI BOTTOM	21793	455784-002
{10}1	455814-001	PANEL, FRONT, 1260-45	21793	455814-001
{12}64	601195	PLUG, JUMPER, 0.1 CTR, LOW PROFILE	00779	530153-2
{22}1	611264	HANDLE, EXTRACTOR, BOTTOM	62559	20817-327
{23}1	611265	HANDLE, EXTRACTOR, TOP	62559	20817-328
{24}.5	611266	MOUNTING HARDWARE, HANDLE	62559	21100-745
{25}31	615539	SCREW, PFH, 4-40X, 125	-	-
{27}2	616405	SCREW, PFH, M2.5-.45 X 12	-	-
{28}8	616480	SCREW, PFH, 4-40 X .375	-	-
{29}7	616251	SCREW, PPH, SEMS ASSY, 4-40X.250	78189	-
{31}1	920710	LABEL, IDENIFICATION	21793	920710
{32}1	921212-019	LABEL, VXI, 1260-45	21793	921212-019
{33}A/R	920962	LOCTITE, 242, MED STR.	05972	272
{35}1	921059	LABEL, CAUTION, STATIC	21793	921059
{36}1	921148	LABEL SET, VXI-VME	21793	921148
{38}1	407051	SHIPPING KIT, 1260-45	21793	407051

407051-001 SHIP KIT, 1260-45, CRIMP

REF DESIG	RACAL-DANA P/N	DESCRIPTION	FSC	MANUFACTURER'S P/N
{1}2	455540	KEY, LOCKOUT, TTL, A/C	21793	455540
{2}2	455541	KEY, LOCKOUT, TTL, A/C	21793	455541
{3}2	455542	KEY, LOCKOUT, TTL, A/C	21793	455542
{5}4	602094-064	CONNECTOR, RECEPT, 64-PIN	22526	65043-005
{10}320	611311	TERMINAL, CRIMP	22526	48251-000
{11}3	615013	SCREW, PPH, 2-56 X .188	-	-
{13}64	601195	PLUG, JUMPER, 0.1 CTR, LOW PROFILE	00779	530153-2
{15}1	407058	CABLE ASSY., 1260-45	21793	407058
{16}1	602094-068	CONNECTOR, RECEPT, 68-PIN	22526	65043-003

407051-002 SHIP KIT, 1260-45, IDC

REF DESIG	RACAL-DANA P/N	DESCRIPTION	FSC	MANUFACTURER'S P/N
{1}2	455540	KEY, LOCKOUT, TTL, A/C	21793	455540
{2}2	455541	KEY, LOCKOUT, TTL, A/C	21793	455541
{3}2	455542	KEY, LOCKOUT, TTL, A/C	21793	455542
{5}4	602004	CONNECTOR, TYPE B, FEMALE, 64-PIN	06383	120-064-455
{6}4	602004-001	STRAIN RELIEF, WITH HANDLE	06383	120-000-032
{7}4	602004-002	PULL TAB, SOCKET, 2.5W	06383	LPT-50
{11}3	615013	SCREW, PPF, 2-56 X .188	-	-
{13}64	601195	PLUG, JUMPER, 0.1 CTR, LOW PROFILE	00779	530153-2
{15}1	407058	CABLE ASSY., 1260-45	21793	407058
{16}1	602101-064	CONNECTOR, FLAT CABLE, RECEPTACLE, 64 PIN	53387	7964-6500EC
{17}1	602101-900	STRAIN RELIEF, CONNECTOR, 64 PIN	53387	3448-7964

405043 PCB ASSY., 1260-45

REF DESIG	RACAL-DANA P/N	DESCRIPTION	FSC	MANUFACTURER'S P/N
C1	130177	CAPACITOR, CHIP, SMD, 270PF	95275	VJ1206A271KXAMT
C2-C5	110126	CAP, TANTA, 6.8UF, 35V, 20 PERCENT	05397	T355F685M035AS
C6-C33	R-21-1801	CAP, CHIP, 10 NF	95275	VJ1206Y103MF
C80-C83	R-21-1801	CAP, CHIP, 10 NF	95275	VJ1206Y103MF
CR1-CR128	210128	DIODE, DUAL, SOT-23	73445	BAV70
J3	601925	CONNECTOR, PCB, RECEPT, 3 ROW, 96P	52072	618008
J4	601925	CONNECTOR, PCB, RECEPT, 3 ROW, 96P	52072	618008
J5	602023	CABLE ASSY., IDC 60 PIN	21793	602023
J8	602095	CONNECTOR, PLUG, 64 PIN	55322	MTSW-1-32-08-GD-08-RA
J10	601802	CONNECTOR, PCB, PLUG, 16P	52072	CA-D16R-23B009
J200	602005	CONNECTOR, DIN TYPE B, MALE, 64 PIN	06383	100-064033B
J202	602005	CONNECTOR, DIN TYPE B, MALE, 64 PIN	06383	100-064033B
K1-K128	310232	RELAY, ELEC-MECH, 2P2T, 12V	61529	TQ2E-L2-12V
K257-K264	310197	RELAY, 2 FORM C	61529	TQ2E-24V
L1	310193	CHOKE, SHIELDED, 5UH	91637	IH-5-5-10
L2	310193	CHOKE, SHIELDED, 5UH	91637	IH-5-5-10
L3	600245	JUMPER, INSULATED	52210	L-2007-1
L5	100164	CAP, FEED-THRU,800PF, 50V	00779	842448-2
L6	100164	CAP, FEED-THRU,800PF, 50V	00779	842448-2
P1	601675-001	CONNECTOR, EUROCARD, 96 PIN (MODIFIED)	21793	601675-001
P2	601675-001	CONNECTOR, EUROCARD, 96 PIN (MODIFIED)	21793	601675-001
R1	050076	RESISTOR, CHIP, 5.23K, .06W, 1 PCT	91637	CRCW0805-5231F
R2	050062	RES, CHIP, 10K OHM, .06W, 1PCT	91637	CRCW08051002F
R3	010234	RESISTOR, METAL FILM, 33.2K, 1/4W, 1PCT	81349	RN60D3322F
R4	050062	RES, CHIP, 10K OHM, .06W, 1PCT	91637	CRCW08051002F
SW1-SW3	601969	SWITCH, DIP 6 POS, LOW PROFILE	65832	K406S
U1	231131	IC, DIGITAL, SHIFT REGISTER	18324	PC74HCT164D
U2	231130	IC, DIGITAL, FLIP FLOP	18324	PC74HC273
U3	231133	IC, INT, DRIVER	56289	UDN2982LW
U4	231131	IC, DIGITAL, SHIFT REGISTER	18324	PC74HCT164D
U5	231130	IC, DIGITAL, FLIP FLOP	18324	PC74HC273
U6	231133	IC, INT, DRIVER	56289	UDN2982LW
U7	231131	IC, DIGITAL, SHIFT REGISTER	18324	PC74HCT164D
U8	231130	IC, DIGITAL, FLIP FLOP	18324	PC74HC273
U9	231133	IC, INT, DRIVER	56289	UDN2982LW
U10	231131	IC, DIGITAL, SHIFT REGISTER	18324	PC74HCT164D
U11	231130	IC, DIGITAL, FLIP FLOP	18324	PC74HC273
U12	231133	IC, INT, DRIVER	56289	UDN2982LW
U13	231131	IC, DIGITAL, SHIFT REGISTER	18324	PC74HCT164D
U14	231130	IC, DIGITAL, FLIP FLOP	18324	PC74HC273
U15	231098	IC, SOIC TRANSISTOR	56289	ULN-2803LW
U16	231131	IC, DIGITAL, SHIFT REGISTER	18324	PC74HCT164D
U17	231130	IC, DIGITAL, FLIP FLOP	18324	PC74HC273
U18	231098	IC, SOIC TRANSISTOR	56289	ULN-2803LW
U19-U22	231093	IC, QUAD COMPARATOR	04713	LM339D
U23	231120	IC, 8-BIT, PARALLEL/SERIAL OUT S.R.	18324	74HCT166D
U24	231120	IC, 8-BIT, PARALLEL/SERIAL OUT S.R.	18324	74HCT166D
U25	231096	IC, QUAD DIFF RECEIVER	01295	AM26LS32ACD
U26	231096	IC, QUAD DIFF RECEIVER	01295	AM26LS32ACD
U27	231125	IC, DIGITAL, LINE DRIVER	27014	DS26LS31MN
U28	231154	IC, PROGRAMMED PLA	21793	231154
U29	231153	IC, PROGRAMMED PLA	21793	231153
U30	231094	IC, DEMUX DECODER	18324	N74LS138D
U31	231135	IC, DIGITAL, 4-BIT COMPARATOR	18324	PC74HCT85D
U32	231093	IC, QUAD COMPARATOR	04713	LM339D
U33	231131	IC, DIGITAL, SHIFT REGISTER	18324	PC74HCT164D
U34	231131	IC, DIGITAL, SHIFT REGISTER	18324	PC74HCT164D
U35	231120	IC, 8-BIT, PARALLEL/SERIAL OUT S.R.	18324	74HCT166D
U36	231152	IC, PROGRAMMED PIA	21793	231152

405043 PCB ASSY., 1260-45

REF DESIG	RACAL-DANA P/N	DESCRIPTION	FSC	MANUFACTURER'S P/N
U37	231147	IC, MULTIPLEXER	04713	74HC253D
U38	231131	IC, DIGITAL, SHIFT REGISTER	18324	PC74HCT164D
U39	231130	IC, DIGITAL, FLIP FLOP	18324	PC74HC273
U40	231098	IC, SOIC TRANSISTOR	56289	ULN-2803LW
U41	231120	IC, 8-BIT, PARALLEL/SERIAL OUT S.R.	18324	74HCT166D
Z1	080153	RES NETWORK, 220 OHM, 16P8R	73138	628-AL-221J
Z2	080153	RES NETWORK, 220 OHM, 16P8R	73138	628-AL-221J
Z3	080154	RES NETWORK, 33K, 16P15R	73138	628-B-3302F
Z4	080156	RES NETWORK, 47K, 16P8R	91637	SOMC-1603-4702F
Z5	080156	RES NETWORK, 47K, 16P8R	91637	SOMC-1603-4702F
Z7	080120	RES NETWORK, 10K	11236	767-161R10K
Z8	080114	RES NETWORK, 16P8R, 15K	73138	628-AL-153J
Z9	080120	RES NETWORK, 10K	11236	767-161R10K
Z17	080119	RES NETWORK, 220K	91637	SOMC-1603-224K
Z18	080117	RES NETWORK, 16P8R, 47K	73138	628-AL-473J
{56}1	401951-003	PCB ASSY., P3 JUMPER	21793	401951-003
{57}1	401951	PCB ASSY., LBUS JUMPER	21793	401951
{59}1	415043	PCB, 1260-45 (UNLOADED)	21793	415043
{63}A/R	500132	WIRE, TEFLON TWISTED PAIR, 24 GA, BLK/WHT	-	-
{83}6	610257	STANDOFF, SWAGE, 1/4D, 4-40 X .31	06540	95348B04403A
{84}4	611258-001	STANDOFF, SWAGE 4-40 X .170	06540	8091-11B-B-440-28

405044 PCB ASSY., 1260-45D

REF DESIG	RACAL-DANA P/N	DESCRIPTION	FSC	MANUFACTURER'S P/N
CR129-256	210128	DIODE, DUAL, SOT-23	73445	BAV70
J5	602008	CONNECTOR, RIGHT ANGLE, 60 PIN	52072	CA-60HRM-1F-S
J7	602095	CONNECTOR, PLUG, 64 PIN	55322	MTSW-1-32-08-GD-08-RA
J9	601802	CONNECTOR, PCB, PLUG, 16P	52072	CA-D16R-238009
J201	602005	CONNECTOR, DIN TYPE B, MALE, 64 PIN	06383	100-0640338
J203	602005	CONNECTOR, DIN TYPE B, MALE, 64 PIN	06383	100-0640338
K129-K256	310232	RELAY, ELEC-MECH, 2P2T, 12V	61529	TQ2E-L2-12V
K265-K272	310197	RELAY, 2 FORM C	61529	TQ2E-24V
{8}1	415044	PCB, 1260-45D (UNLOADED)	21793	415044
{11}A/R	500132	WIRE, TEFLON TWISTED PAIR, 24 GA, BLK/WHT	-	-

1260-54 TREE MULTIPLEXER MODULE

1260 VXI SWITCHING CARD

RACAL-DANA

RACAL-DANA INSTRUMENTS INC.

4 Goodyear Street, P.O. Box C-19541, Irvine, CA 92713
Telephone: 714/859-8999, Fax: 714/859-2505

RACAL INSTRUMENTS, LTD.

480 Bath Road, Slough, Berkshire, SL1 6BE, England
Telephone: 44-628 604455, Fax: 44-628 662017

RACAL SYSTEMS ELECTRONIQUE S.A.

18 Avenue Dutartre, 78150 Le Chesnay, France
Telephone: 33-1-3-955-8888, Fax: 33-1-3-955-6735

RACAL ELEKTRONIK SYSTEMS GmbH

Frankenforster Strasse 21, D-5060 Bergisch-Gladbach 1, Federal Republic of Germany
Telephone: 49-22-04-60081, Fax: 49-22-04-21491

RACAL SYSTEMS ELETTRONICA

Via Roma, 108/PAL, E1, 20060 Cassina de Pecchi, Milan, Italy
Telephone: 39-2-9514717/737/770, Fax: 39-2-9514522

RACAL

PUBLICATION DATE: APRIL 1992

Copyright ©1992 by Racal-Dana Instruments Inc. Printed in the United States of America. All rights reserved.
This book or parts thereof may not be reproduced in any form without written permission of the publishers.

TABLE OF CONTENTS

1260-54 TREE MULTIPLEXER MODULE

1.0	1260-54 Tree Multiplexer Module	1-1
2.0	Installation Instructions	1-3
2.1	Unpacking and Inspection	1-3
2.2	Reshipment Instructions	1-3
2.3	Option 01 Installation	1-3
2.4	Module Installation	1-3
3.0	1260-54 Module Specific Syntax	1-4
3.1	Syntax	1-4
4.0	Drawings	1-6
5.0	Parts List	1-20
6.0	Wire List	1-25

Figures

1-1	1260-54 Functional Diagram	1-1

1.0 1260-54 1 GHz Tree Multiplexer Module

The 1260-54 provides six 1 x 4 tree multiplexers. Each channel has the capability of being terminated into an optional 50 ohm SMB terminator.

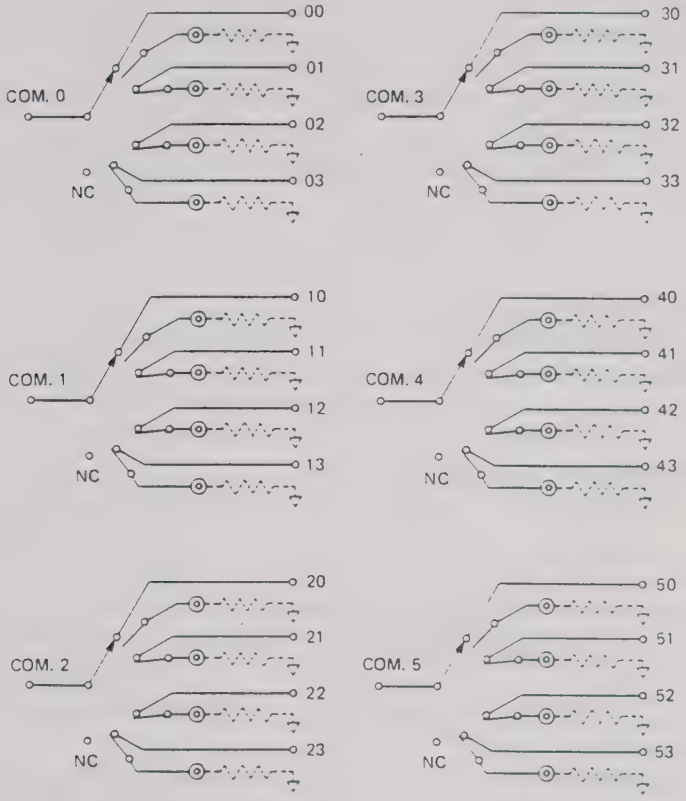

Figure 1-1, 1260-54 Functional Diagram

Specifications

Minimum Option 01 Firmware Revision	8.1
User Connector	SMC
Maximum Switchable Voltage (Signal to Ground)	30 VDC, 100 VAC RMS
Maximum Switchable Current Per Channel	1.5 ADC, 1.5 A RMS

Maximum Switchable Power Per Channel	60 W DC, 60 VA AC, 60 W RF Power
DC Performance	
Path Resistance	1Ω at 2A DC
AC Performance	
Bandwidth, (-3 dB) 50 ohm Termination	1 GHz
Insertion Loss, 50 ohm Termination	<.50 dB at 100 MHz <1.5 Db to 500 Mhz
Crosstalk Across Groups 50 ohm Termination	<-95 dB to 100 Mhz <-80 Db to 500 MHz <-70 dB to 1 GHz
Isolation Between Channels 50 ohm Termination	<-80 dB at 100 MHz <-65 dB at 500 MHz <-50 dB at 1 GHz
VSWR (50 ohm Termination)	1.2 : 1 at 100 MHz 1.3 : 1 at 500 MHz 2.0 : 1 at 1 GHz
Switching Time	<10 ms
Cooling Requirements	
Airflow: Backpressure:	4 litres / sec 0.5 mm H_2O
Power Requirements (I_{Pm})	
+5 V: +24 V:	2.5 A 10 mA per relay
Weight	1.174 Kg (2.59 lbs) without Option 01 1.315 Kg (2.90 lbs) with Option 01

2.0 Installation Instructions

2.1 Unpacking and Inspection

Before unpacking the switching module, check the exterior of the shipping carton for any signs of damage. All irregularities should be noted on the shipping bill. Remove the instrument from its carton, preserving the factory packaging as much as possible. Inspect the switching module for any defect or damage. Immediately notify the carrier if any damage is apparent. Have a qualified person check the instrument for safety before use.

2.2 Reshipment Instructions

Use the original packing when returning the switching module to Racal-Dana for calibration or servicing. The original shipping carton and the instrument's plastic foam will provide the necessary support for safe reshipment. If the original packing is unavailable, wrap the switching module in plastic sheeting and use plastic spray foam to surround and protect the instrument. Reship in either the original or a new shipping carton.

2.3 Option 01 Installation

Installation of the Option 01 to the 1260-54 is described in the Installation section of the 1260 Series VXI Switching Cards Manual.

2.4 Module Installation

Installation of the 1260-54 Switching Module into a VXI mainframe, including the setting of DIP switches, is described in the Installation section of the 1260 Series VXI Switching Cards Manual. The ID byte DIP switches, SW1-5 and SW1-6, should be set OFF.

3.0 1260-54 Module Specific Syntax

NOTE

The 1260-54 Coaxial switching module is supported by the Option 01 Operating Systems at Revision levels 3.1 and above.

The 1260-54 RF Multiplexer supports the OPEN, CLOSE, PSETUP, RESET and PDATAOUT commands.

3.1 Syntax

The module specific syntax for the 1260-54 RF Multiplexer is as follows:

OPEN <module address>.<channel>[;<module address>.<channel>].....

where <module address> is the address.
<channel> is the relay to be closed to connect an input to the output.

Note that Channels remain closed until opened by an OPEN command.

3.1.1 The range of values for <channel> is:

00-03
10-13
20-23
30-33
40-43
50-53

3.1.2 The Module Specific Syntax for the CLOSE command is the same as for the OPEN command. Note each group of <channel> values contains five values. Using the highest value in each group, 04, 14, 24 etc, will give a connection to a "not connected" pin, i.e., open the path from input to output. This has the same effect using an OPEN command.

3.1.3 Connections between input and output are mutually exclusive within a group in the switch module. A CLOSE command will open an existing connection and close the new connection. An OPEN command will open any existing connection in the group and open circuit the Common connection.

3.1.4 The 1260-54 is restricted to the Break-Before-Make sequence mode.

3.1.5 The PSETUP command causes the specified module setup to be transmitted to the VXI Controller. The syntax used is:

PSETUP <module address>[;<module address>][;<module address>].....

where <module address> is the address.

3.1.6 The responses to the PSETUP command for the 1260-54 multiplexer is as follows:

<module address>.1260-54 COAXIAL SWITCHING MODULE
<module address>.BBM
<module address>.END

3.1.7 The PDATAOUT command causes the specified module to transmit the CLOSED state of the relays fitted to the switching module to the 1260 Controller. The syntax used is:

PDATAOUT <module address>[.<module address>][;<module address>].....

3.1.8 The responses to the PDATAOUT command is as follows:

<module address>.1260-54 RF MULTIPLEXER
<module address>.<channel>[,<channel>][,<channel>].....
<module address>.END

3.1.9 The range of values for <channel> is:

00 - 03, 10 - 13, 20 - 23, 30 - 33, 40 - 43 and 50 - 53.

Note that connections to the "not connected" pins within a group are not displayed.

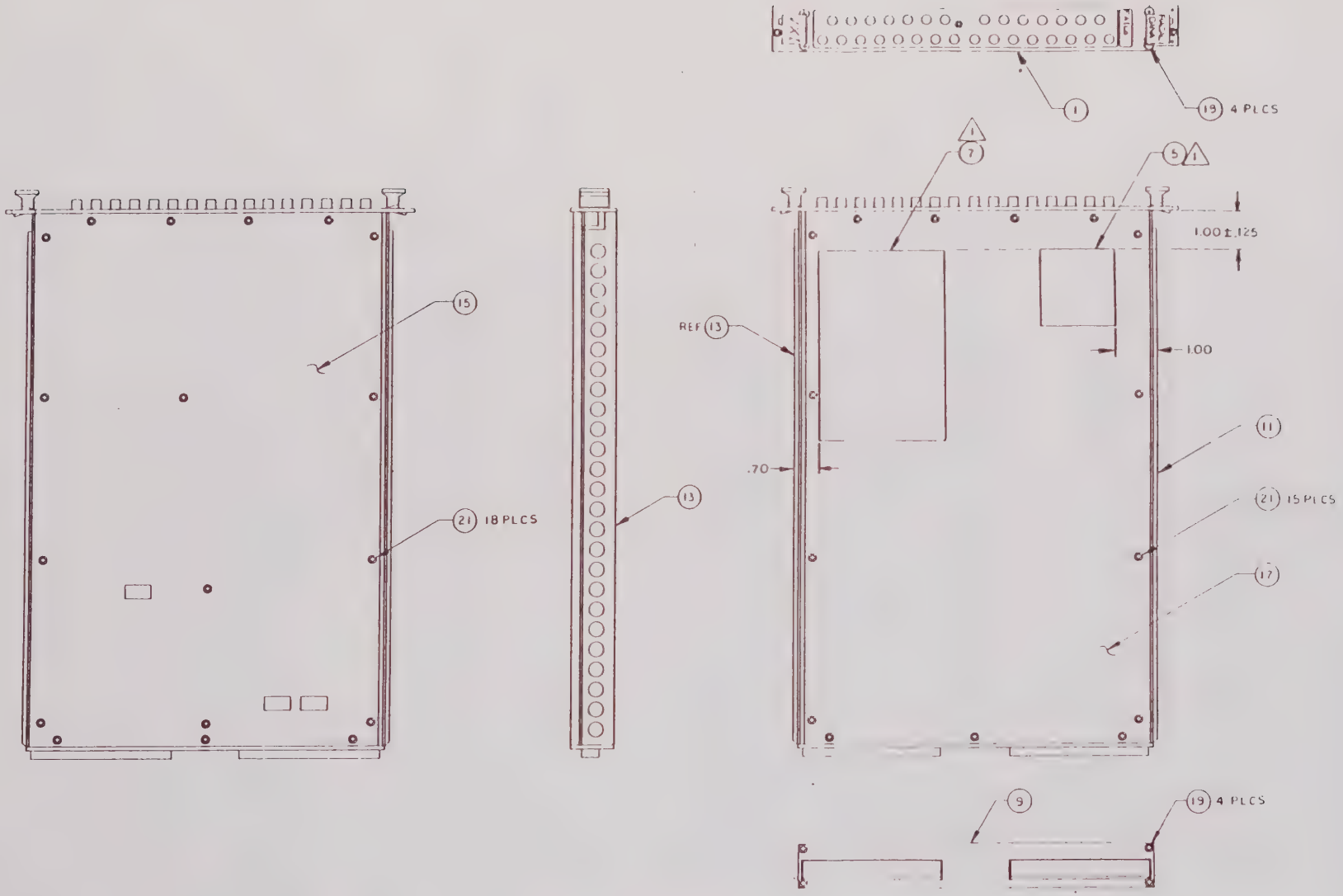

2. INCLUDE ITEM 3 (SHIPPING KIT) IN BOX WITH ASSY.

1 LOCATE LABELS WHERE SHOWN.

NOTES UNLESS OTHERWISE SPECIFIED

PROPRIETARY NOTICE

THIS DOCUMENT AND THE TECHNICAL DATA HEREON DISCLOSED ARE PROPRIETARY TO RACAL-DANA INSTRUMENTS, INC. AND SHALL NOT, WITHOUT EXPRESS WRITTEN PERMISSION OF RACAL-DANA INSTRUMENTS INC. BE USED, RELEASED OR DISCLOSED IN WHOLE OR IN PART, OR USED TO SOLICIT QUOTATIONS FROM A COMPETITIVE SOURCE OR USED FOR MANUFACTURE BY ANYONE OTHER THAN RACAL-DANA INSTRUMENTS INC. THE INFORMATION HEREON HAS BEEN DEVELOPED AT PRIVATE EXPENSE AND MAY ONLY BE USED FOR PURPOSES OF ENGINEERING EVALUATION AND FOR INCORPORATION INTO TECHNICAL SPECIFICATIONS AND OTHER DOCUMENTS WHICH SPECIFY PROCUREMENT OF PRODUCTS FROM RACAL-DANA INSTRUMENTS INC.

RACAL-DANA Instruments Inc.
4 GOODYEAR, IRVINE CALIFORNIA 92714

DOCUMENT TITLE

FINAL ASSY, 1260-54

SIZE	CODE IDENT NO	DOCUMENT NO	REV
D	21793	404768	A

SCALE — SHEET 1 OF 2

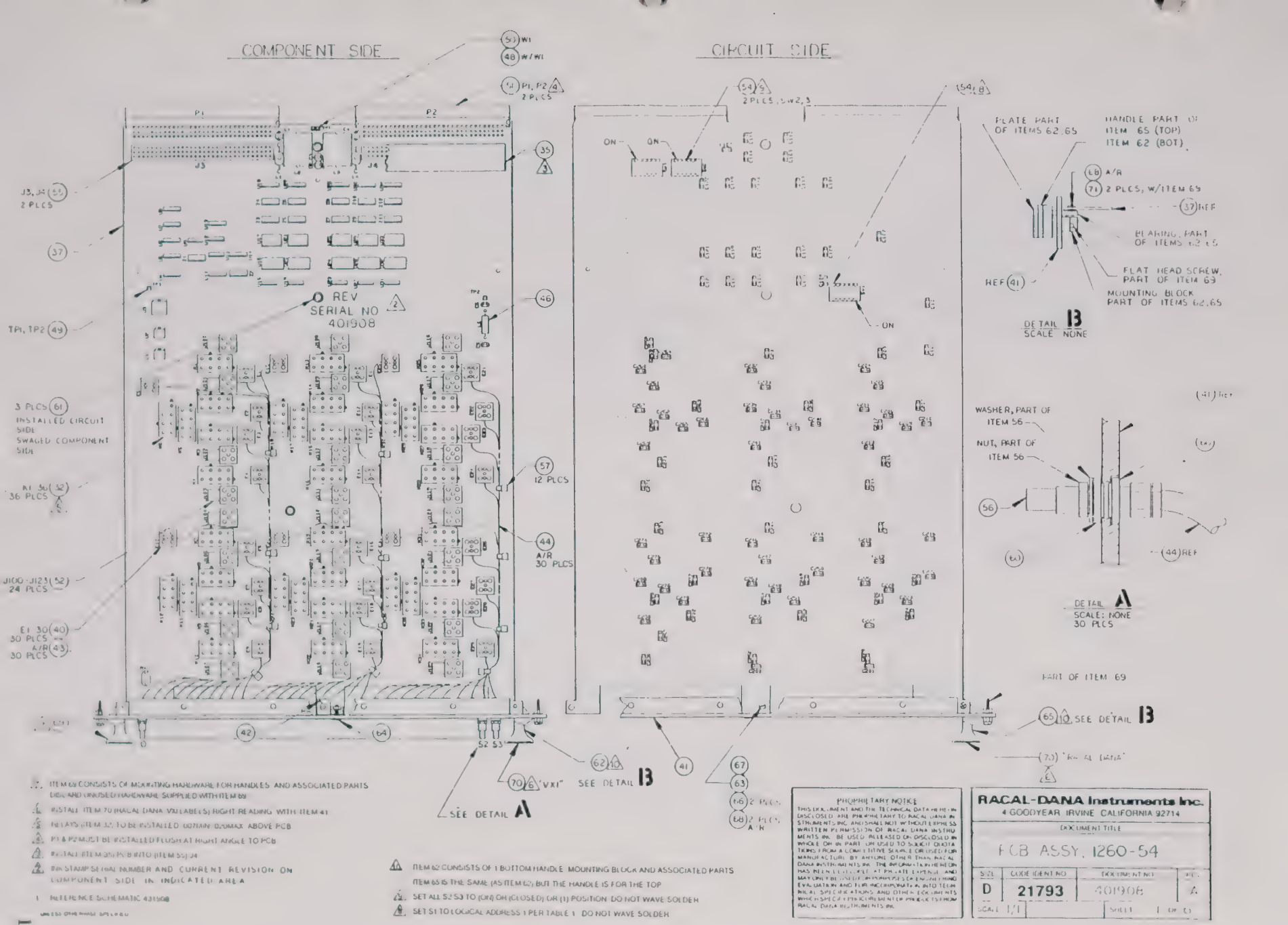

1. ITEM 69 CONSISTS OF MOUNTING HARDWARE FOR HANDLES AND ASSOCIATED PARTS DISCARD UNUSED HARDWARE SUPPLIED WITH ITEM 69
2. INSTALL ITEM 70 (RACAL DANA VXI LABEL(S)) RIGHT READING WITH ITEM 41
3. RELAYS (ITEM 32) TO BE INSTALLED 0.070IN (1.02MM) MAX ABOVE PCB
4. P1 & P2 MUST BE INSTALLED FLUSH AT RIGHT ANGLE TO PCB
5. INSTALL ITEM 63 ON PCB INTO ITEM 55 ONLY
6. INK STAMP SERIAL NUMBER AND CURRENT REVISION ON COMPONENT SIDE IN INDICATED AREA
7. REFERENCE SCHEMATIC 401908

UNLESS OTHERWISE SPECIFIED

8. ITEM 62 CONSISTS OF 1 BOTTOM HANDLE MOUNTING BLOCK AND ASSOCIATED PARTS ITEM 65 IS THE SAME (AS ITEM 62) BUT THE HANDLE IS FOR THE TOP
9. SET ALL S2,S3 TO (0) OR (CLOSED) OR (1) POSITION DO NOT WAVE SOLDER
10. SET S1 TO LOGICAL ADDRESS 1 PER TABLE 1 DO NOT WAVE SOLDER

PROPRIETARY NOTICE
THIS DOCUMENT AND THE TECHNICAL DATA HEREIN DISCLOSED ARE PROPRIETARY TO RACAL-DANA INSTRUMENTS, INC. AND SHALL NOT WITHOUT EXPRESS WRITTEN PERMISSION OF RACAL-DANA INSTRUMENTS INC. BE USED, RELEASED OR DISCLOSED IN WHOLE OR IN PART OR USED TO SOLICIT QUOTATIONS FROM A COMPETITIVE SOURCE OR USED FOR MANUFACTURE BY ANYONE OTHER THAN RACAL-DANA INSTRUMENTS INC. THE INFORMATION HEREIN HAS BEEN DEVELOPED AT PRIVATE EXPENSE AND MAY ONLY BE USED FOR PURPOSES OF ENGINEERING EVALUATION AND FOR INCORPORATION INTO TECHNICAL SPECIFICATIONS AND OTHER DOCUMENTS WHICH SPECIFY PROCUREMENT FROM RACAL-DANA INSTRUMENTS INC.

RACAL-DANA Instruments Inc.			
4 GODDYEAR IRVINE CALIFORNIA 92714			
DOCUMENT TITLE: PCB ASSY, 1260-54			
SIZE: D	CODE IDENT NO: 21793	DOCUMENT NO: 401908	REV: A
SCALE: 1/1		SHEET 1 OF 1	

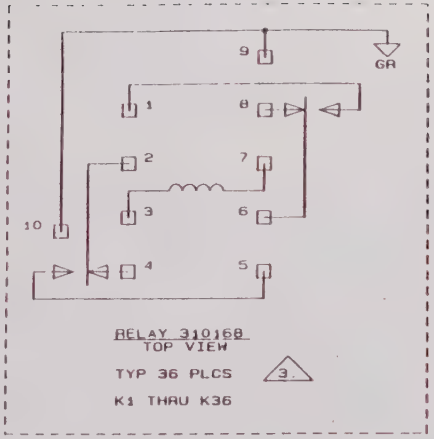

RELAY 310168
TOP VIEW
TYP 36 PLCS △3
K1 THRU K36

REF. DES.	IC TYPE	+5V PIN NO	GND PIN NO
U17, 21, 25, 29, 33	2803		9
U16, 20, 24, 28, 32	74HCT273	20	10
U14	74HCT85	16	8
U13	74LS138	16	8
U11, 12, 15, 19, 23, 27, 31	74HCT164	14	7
U10, 18, 22, 26, 30, 34	74HCT166	16	8
U9	LM339	3	12
U7, 8	26LS32	16	8
U6	26LS31	16	8
U4, 5	74HCT253D	16	8
U3	231154 (22V10H)	28	14
U2	231153 (16R4)	20	10
U1	231152 (16L8Q)	20	10

IC POWER AND GROUND CONNECTIONS

HIGHEST REF. DES.
Z12
W1
U34
TP2
SW3
RV1
P2
L5
K36
J123
E30
C279

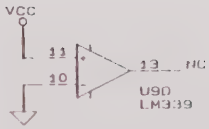

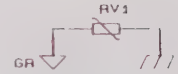

△6. REFER TO SHEET 12 FOR CONNECTIONS.

5 ▽ REFERS TO LOGIC GROUND GR ▽ REFERS TO SIGNAL GROUND

△4. C5 AND C6 ARE NOT INSTALLED.

△3. RELAYS K1 THRU K36 ARE RACAL DANA P/N 310168.
ALL RELAYS SHOWN IN DE-ENERGIZED POSITION.

2. RESISTOR NETWORKS ARE IN OHMS, ±2%

1. CAPACITOR VALUES ARE IN MICROFARADS, 50V, +/-20% UNLESS OTHERWISE SPECIFIED

NOTES: UNLESS OTHERWISE SPECIFIED

PROPRIETARY NOTICE
THIS DOCUMENT AND THE TECHNICAL DATA HEREON DISCLOSED ARE PROPRIETARY TO RACAL DANA INSTRUMENTS INC AND SHALL NOT WITHOUT EXPRESS WRITTEN PERMISSION OF RACAL DANA INSTRUMENTS INC BE USED RELEASED OR DISCLOSED IN WHOLE OR IN PART OR USED TO SOLICIT QUOTATIONS FROM A COMPETITIVE SOURCE OR USED FOR MANUFACTURE BY ANYONE OTHER THAN RACAL DANA INSTRUMENTS INC THE INFORMATION HEREON HAS BEEN DEVELOPED AT PRIVATE EXPENSE AND MAY ONLY BE USED FOR PURPOSES OF ENGINEERING EVALUATION AND FOR INCORPORATION INTO TECHNICAL SPECIFICATIONS AND OTHER DOCUMENTS WHICH SPECIFY PROCUREMENT OF PRODUCTS FROM RACAL DANA INSTRUMENTS INC

RACAL-DANA Instruments Inc.
4 GOODYEAR, IRVINE, CALIFORNIA 92714

DOCUMENT TITLE
SCH, 1260-54

SIZE	CODE IDENT NO	DOCUMENT NO	REV
B	21793	431908	A

SCALE | SHEET 1 OF 12

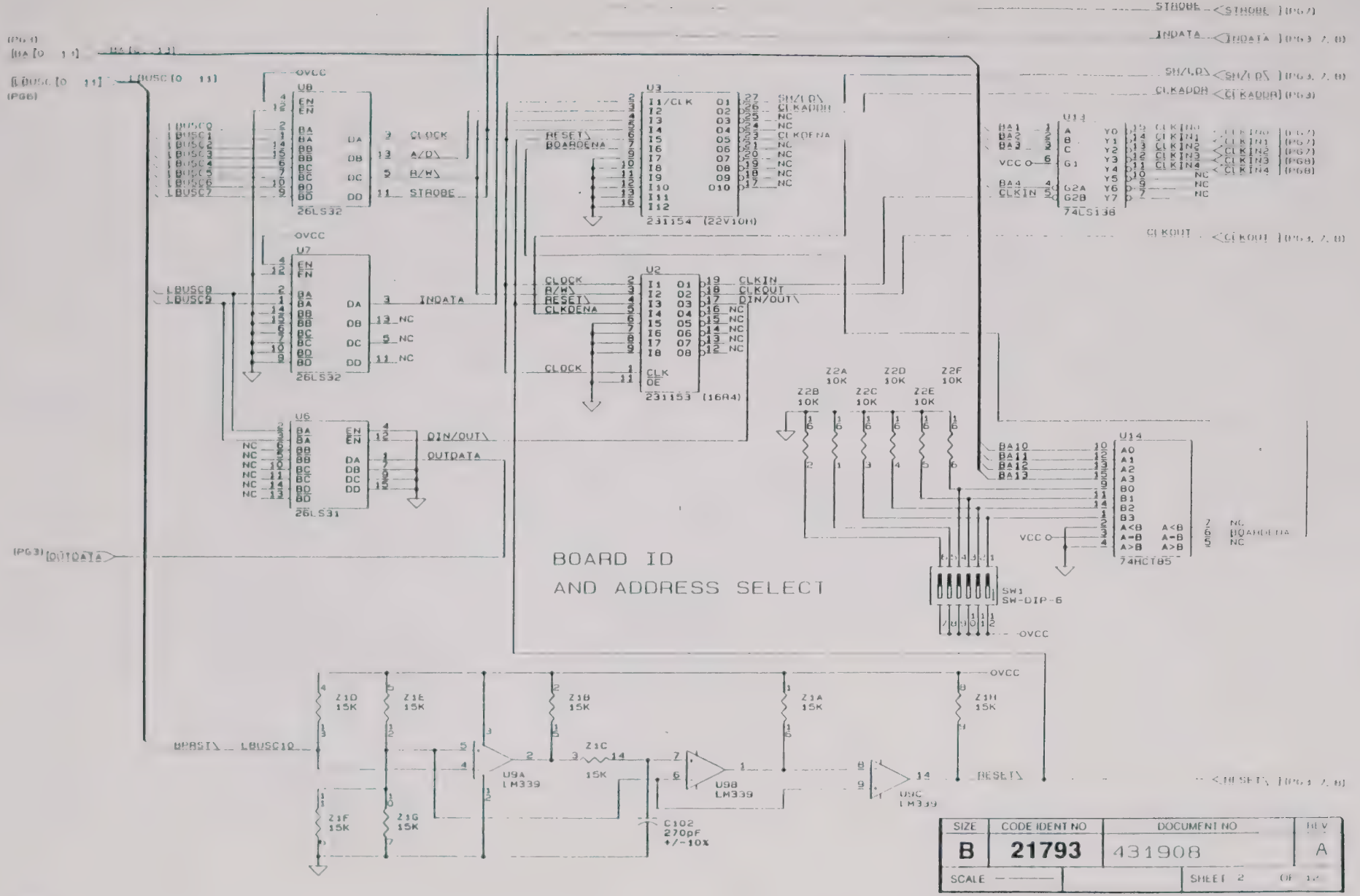

SIZE	CODE IDENT NO	DOCUMENT NO	REV
B	21793	431908	A
SCALE —		SHEET 2	OF 14

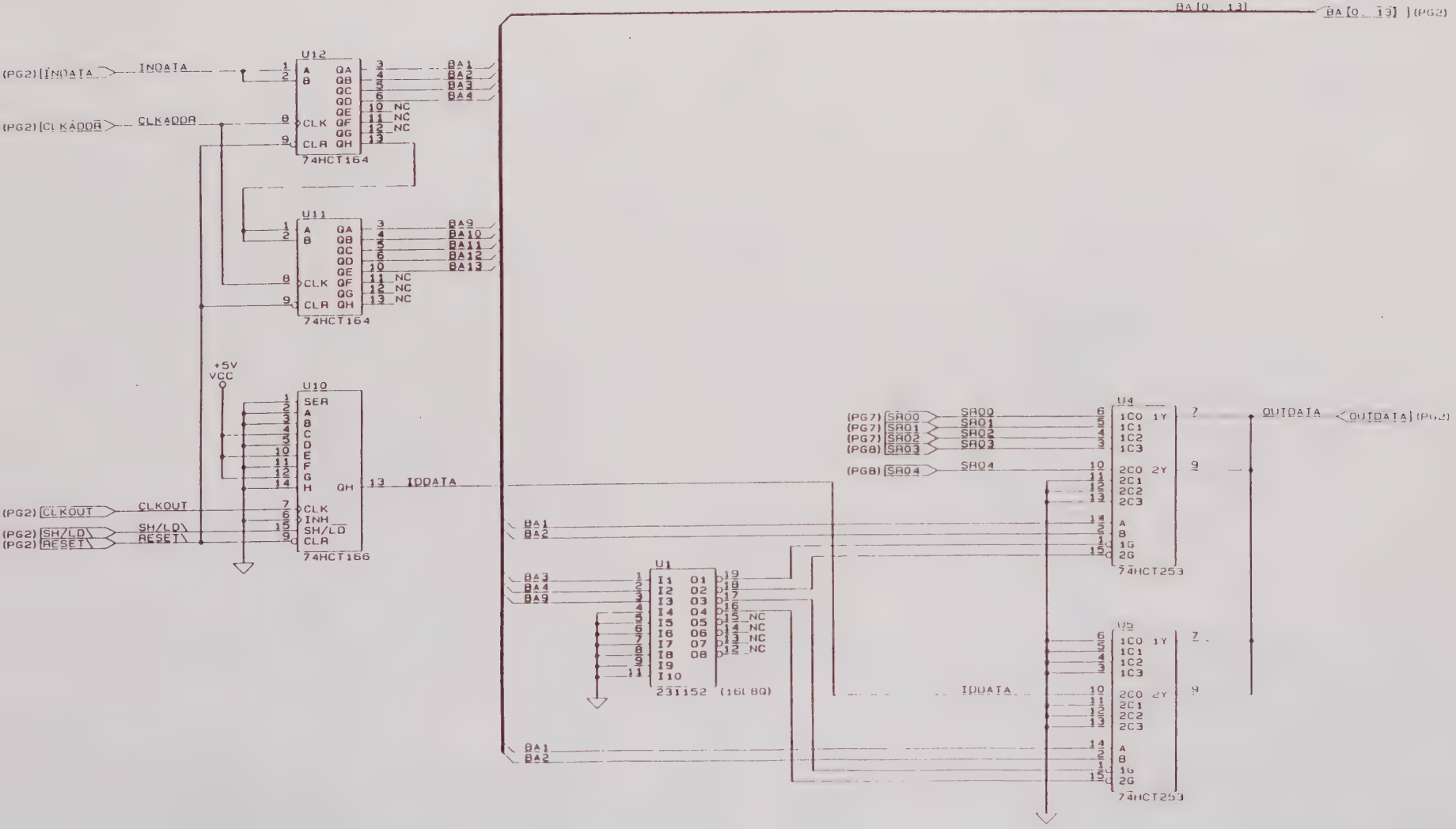

SIZE	CODE IDENT NO	DOCUMENT NO	REV
B	21793	431908	A
SCALE		SHEET 3 OF 12	

SIZE	CODE IDENT NO	DOCUMENT NO	REV
B	21793	431908	A
SCALE —		SHEET 4 OF 12	

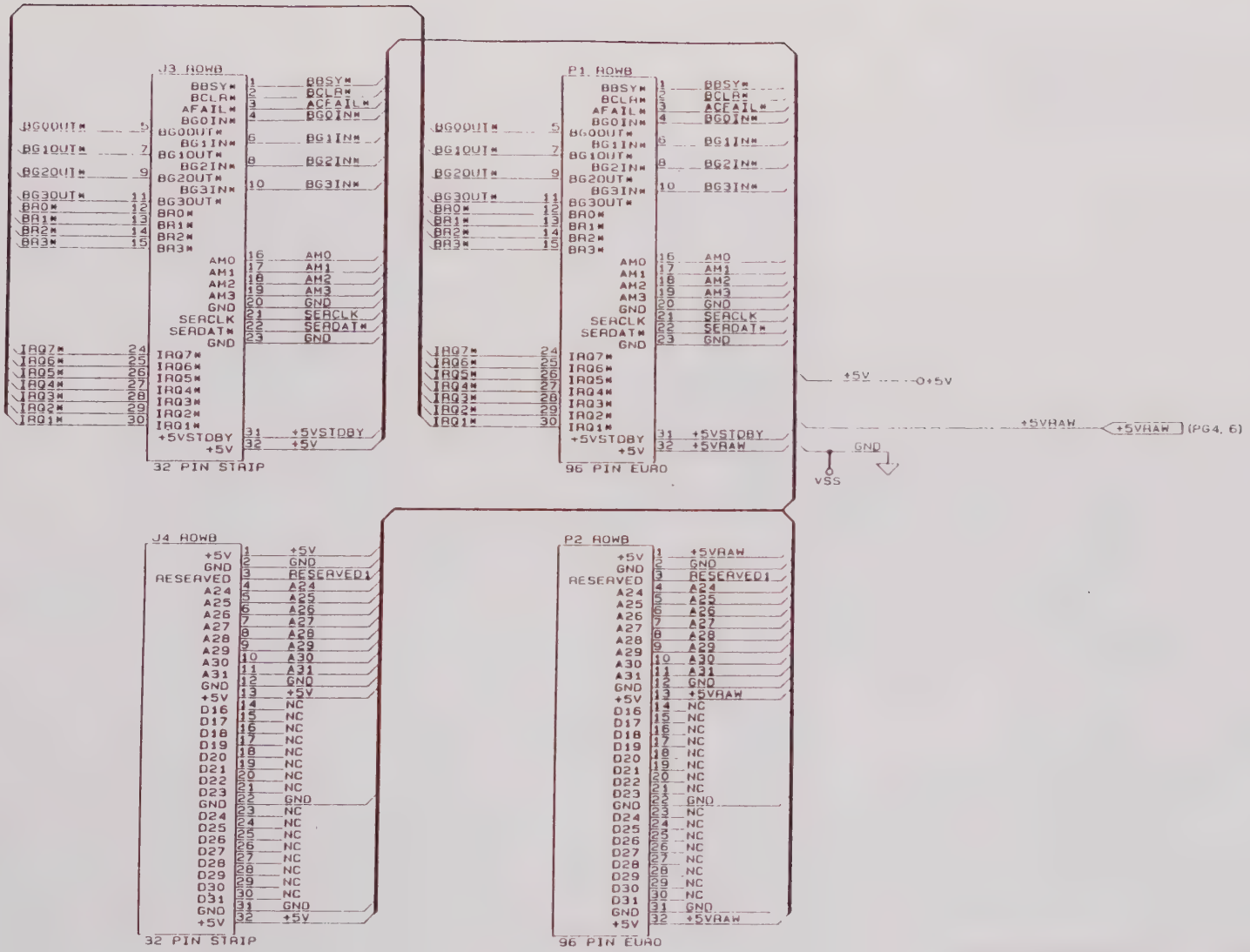

SIZE	CODE IDENT NO	DOCUMENT NO	REV
B	21793	431908	A
SCALE - - - -		SHEET 5 OF 12	

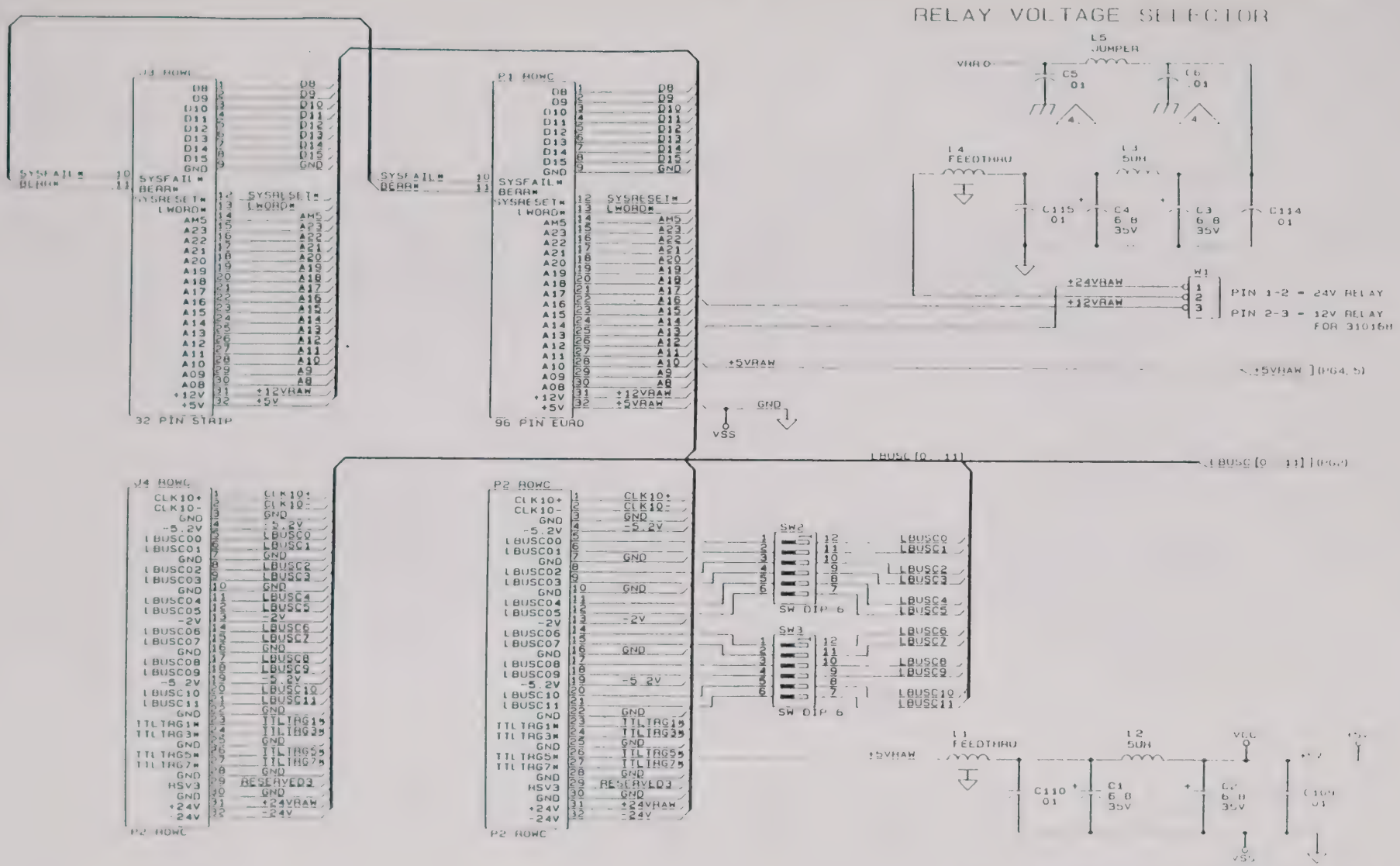

SIZE	CODE IDENT NO	DOCUMENT NO	REV
B	21793	431908	A
SCALE		SHEET 6	OF

SIZE	CODE IDENT NO	DOCUMENT NO	REV
B	21793	431908	A
SCALE		SHEET 7 OF 12	

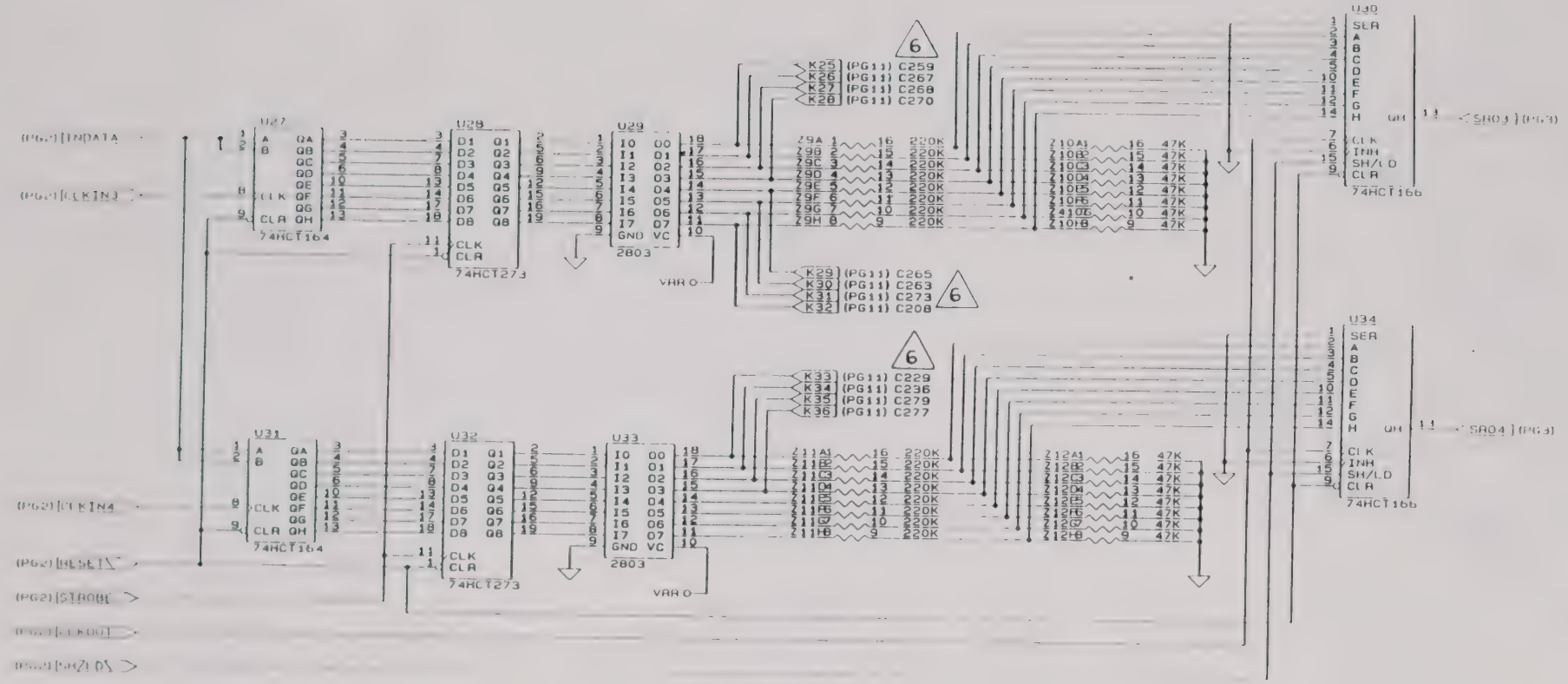

SIZE	CODE IDENT NO	DOCUMENT NO	REV
B	21793	431908	A
SCALE		SHEET 8 OF 12	

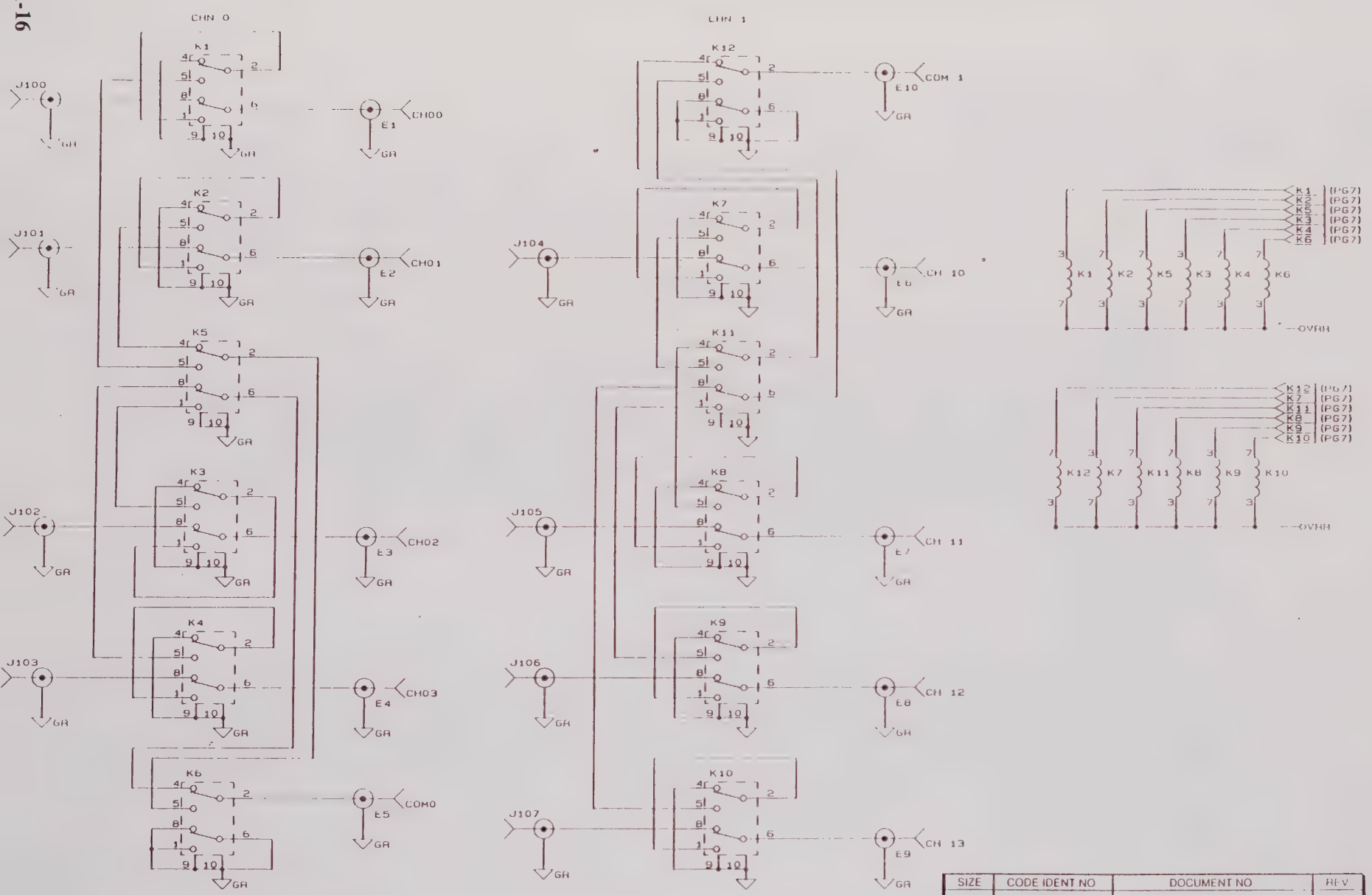

SIZE	CODE IDENT NO	DOCUMENT NO	REV
B	21793	431908	A
SCALE		SHEET 9	OF 12

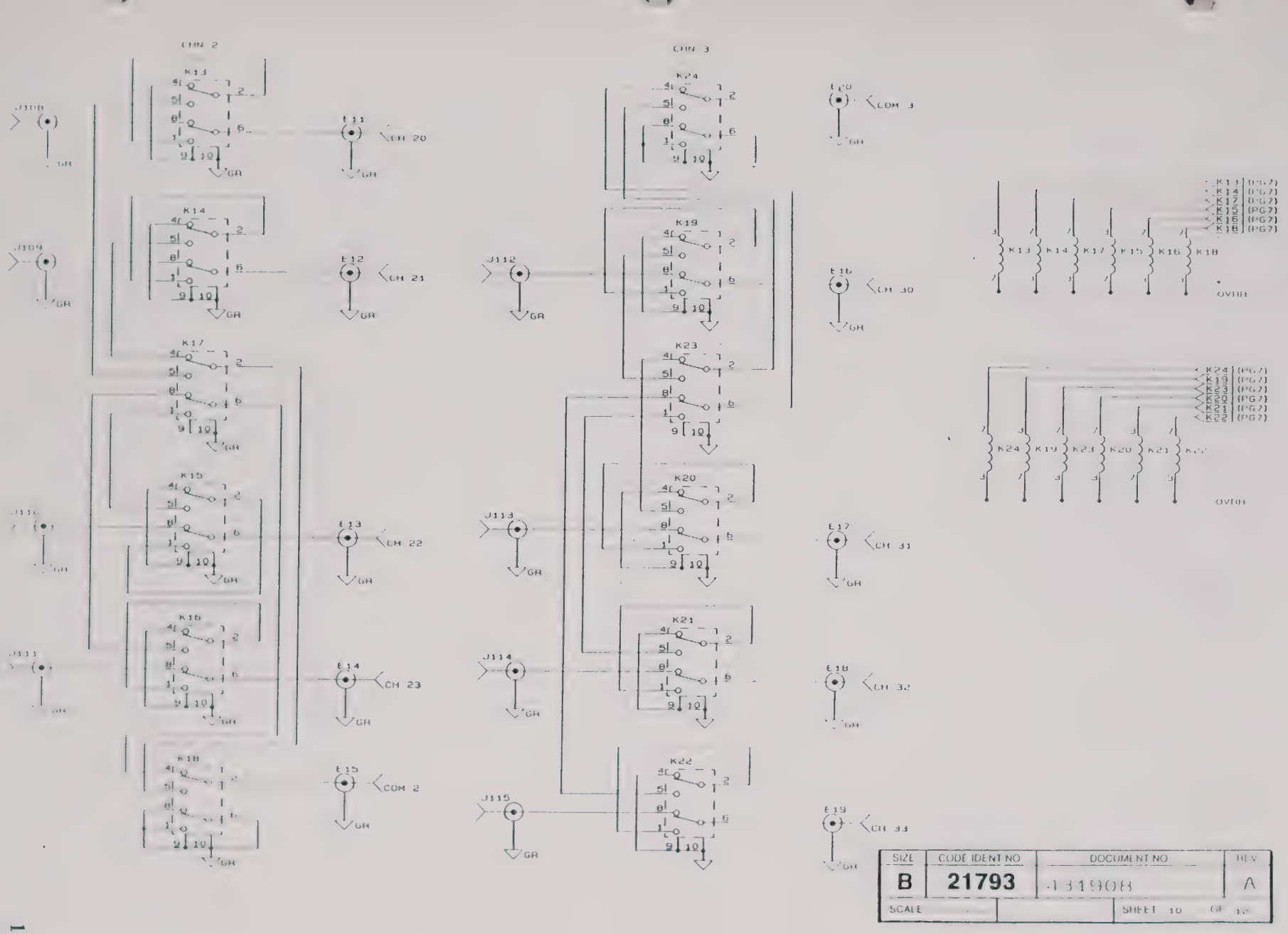

SIZE	CODE IDENT NO.	DOCUMENT NO.	REV.
B	21793	1319088	A
SCALE		SHEET 10 OF 12	

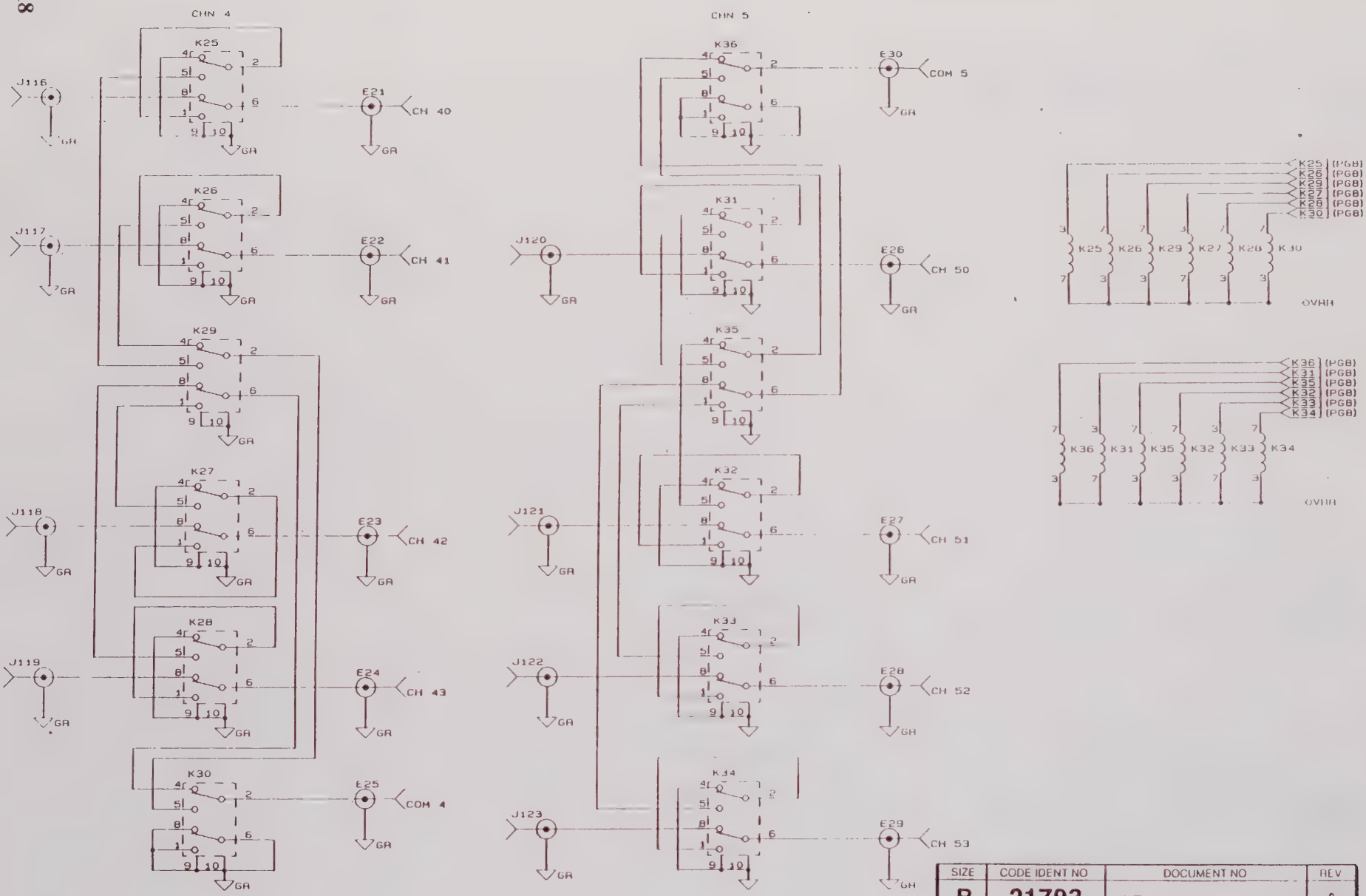

SIZE	CODE IDENT NO	DOCUMENT NO	REV
B	21793	431908	A
SCALE		SHEET 11 OF 12	

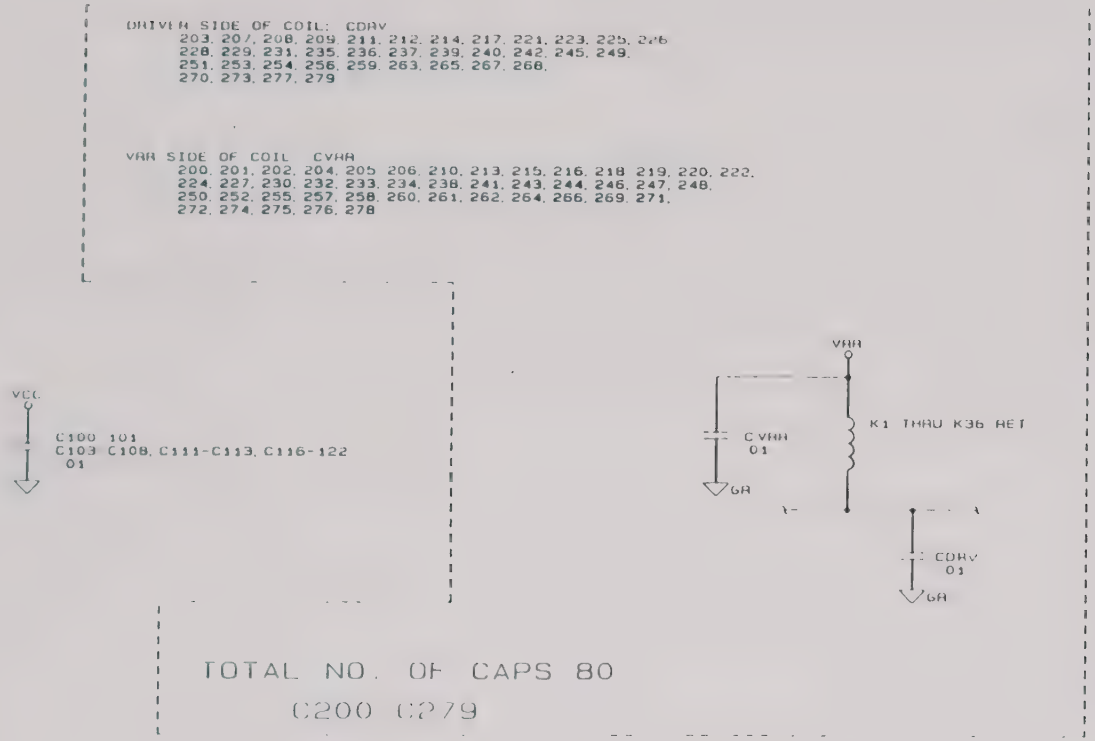

SIZE	CODE IDENT NO	DOCUMENT NO	REV
B	21793	431908	A
SCALE		SHEET 1 OF 1	

404768 FINAL ASSY., 1260-54

REF DESIG	RACAL-DANA P/N	DESCRIPTION	FSC	MANUFACTURER'S P/N
{1}1	401908	PCB ASSY., 1260-54	21793	401908
{3}1	404936	SHIPPING KIT, 1260-14,54	21793	404936
{5}1	921059	LABEL, CAUTION, STATIC	21793	921059
{7}1	921212-006	LABEL, VXI, 1260-54	21793	921212-006
{9}1	455781	PANEL, REAR, SINGLE	21793	455781
{11}1	455784-001	PANEL, VXI TOP	21793	455784-001
{13}1	455784-002	PANEL, VXI BOTTOM	21793	455784-002
{15}1	455780	PANEL, LEFT, 1260-54	21793	455780
{17}1	455780-001	PANEL, RIGHT, 1260-54	21793	455780-001
{19}8	616480	SCREW, PFH, 4-40 X .375	-	-
{21}33	615539	SCREW, PFH, 4-40X, 125	-	-

404936 SHIPPING KIT, 1260-14, 54

REF DESIG	RACAL-DANA P/N	DESCRIPTION	FSC	MANUFACTURER'S P/N
(1)2	455540	KEY, LOCKOUT, TTL, A/C	21793	455540
(2)2	455541	KEY, LOCKOUT, TTL, A/C	21793	455541
(3)2	455542	KEY, LOCKOUT, TTL, A/C	21793	455542
(5)3	615013	SCREW, PPH, 2-56 X .188	-	-

401908 PCB ASSY., 1260-54

REF DESIG	RACAL-DANA P/N	DESCRIPTION	FSC	MANUFACTURER'S P/N
C1-C4	110126	CAP, TANTA, 6.8UF, 35V, 20 PERCENT	05397	T355F685M035AS
C100	R-21-1801	CAP, CHIP, 10 NF	95275	VJ1206Y103MF
C101	R-21-1801	CAP, CHIP, 10 NF	95275	VJ1206Y103MF
C102	130177	CAPACITOR, CHIP, SMD, 270PF	95275	VJ1206A271KXAMT
C103-C122	R-21-1801	CAP, CHIP, 10 NF	95275	VJ1206Y103MF
C200-C279	R-21-1801	CAP, CHIP, 10 NF	95275	VJ1206Y103MF
E1-E30	455520	COAX TERMINAL, PCB MOUNT	21793	455520
J3	601925	CONNECTOR, PCB, RECEPT, 3 ROW, 96P	52072	618008
J4	601925	CONNECTOR, PCB, RECEPT, 3 ROW, 96P	52072	618008
J100-J123	601787	CONNECTOR, COAXIAL, RECEPTACLE	98291	51-053-000
K1-K36	310168	RELAY, RF, 2 FORM C	01526	3SAV2590A2
L1	100164	CAP, FEED-THRU, 800PF, 50V	00779	842448-2
L2	310193	CHOKE, SHIELDED, 5UH	91637	IH-5-5-10
L3	310193	CHOKE, SHIELDED, 5UH	91637	IH-5-5-10
L4	100164	CAP, FEED-THRU, 800PF, 50V	00779	842448-2
L5	600245	JUMPER, INSULATED	52210	TL-2007-1
P1	601675-001	CONNECTOR, EUROCARD, 96 PIN (MODIFIED)	21793	601675-001
P2	601675-001	CONNECTOR, EUROCARD, 96 PIN (MODIFIED)	21793	601675-001
RV1	220102	VARISTOR, 56V, 1.7W	03508	V56ZA2
SW1	601969	SWITCH, DIP 6 POS, LOW PROFILE	65832	K406S
SW2	601969	SWITCH, DIP 6 POS, LOW PROFILE	65832	K406S
SW3	601969	SWITCH, DIP 6 POS, LOW PROFILE	65832	K406S
TP1	601197	POST, TEST, .025 SQ	00779	6-87022-6
TP2	601197	POST, TEST, .025 SQ	00779	6-87022-6
U1	231152	IC, PROGRAMMED PIA	21793	231152
U2	231153	IC, PROGRAMMED PLA	21793	231153
U3	231154	IC, PROGRAMMED PLA	21793	231154
U4	231147	IC, MULTIPLEXER	04713	74HC253D
U5	231147	IC, MULTIPLEXER	04713	74HC253D
U6	231125	IC, DIGITAL, LINE DRIVER	27014	DS26LS31MN
U7	231096	IC, QUAD DIFF RECEIVER	01295	AM26LS32ACD
U8	231096	IC, QUAD DIFF RECEIVER	01295	AM26LS32ACD
U9	231093	IC, QUAD COMPARATOR	04713	LM339D
U10	231120	IC, 8-BIT, PARALLEL/SERIAL OUT S.R.	18324	74HCT166D
U11	231131	IC, DIGITAL, SHIFT REGISTER	18324	PC74HCT164D
U12	231131	IC, DIGITAL, SHIFT REGISTER	18324	PC74HCT164D
U13	231094	IC, DEMUX DECODER	18324	N74LS138D
U14	231135	IC, DIGITAL, 4-BIT COMPARATOR	18324	PC74HCT85D
U15	231131	IC, DIGITAL, SHIFT REGISTER	18324	PC74HCT164D
U16	231130	IC, DIGITAL, FLIP FLOP	18324	PC74HC273
U17	231098	IC, SOIC TRANSISTOR	56289	ULN-2803LW
U18	231120	IC, 8-BIT, PARALLEL/SERIAL OUT S.R.	18324	74HCT166D
U19	231131	IC, DIGITAL, SHIFT REGISTER	18324	PC74HCT164D
U20	231130	IC, DIGITAL, FLIP FLOP	18324	PC74HC273
U21	231098	IC, SOIC TRANSISTOR	56289	ULN-2803LW
U22	231120	IC, 8-BIT, PARALLEL/SERIAL OUT S.R.	18324	74HCT166D
U23	231131	IC, DIGITAL, SHIFT REGISTER	18324	PC74HCT164D
U24	231130	IC, DIGITAL, FLIP FLOP	18324	PC74HC273
U25	231098	IC, SOIC TRANSISTOR	56289	ULN-2803LW
U26	231120	IC, 8-BIT, PARALLEL/SERIAL OUT S.R.	18324	74HCT166D
U27	231131	IC, DIGITAL, SHIFT REGISTER	18324	PC74HCT164D
U28	231130	IC, DIGITAL, FLIP FLOP	18324	PC74HC273
U29	231098	IC, SOIC TRANSISTOR	56289	ULN-2803LW
U30	231120	IC, 8-BIT, PARALLEL/SERIAL OUT S.R.	18324	74HCT166D
U31	231131	IC, DIGITAL, SHIFT REGISTER	18324	PC74HCT164D
U32	231130	IC, DIGITAL, FLIP FLOP	18324	PC74HC273
U33	231098	IC, SOIC TRANSISTOR	56289	ULN-2803LW
U34	231120	IC, 8-BIT, PARALLEL/SERIAL OUT S.R.	18324	74HCT166D
W1	601208-016	CONNECTOR, PCB, PLUG, 3-PIN	52072	CA-S03-23B-43

401908 PCB ASSY., 1260-54

REF DESIG	RACAL-DANA P/N	DESCRIPTION	FSC	MANUFACTURER'S P/N
Z1	080114	RES NETWORK, 16P8R, 15K	73138	628-AL-153J
Z2	080120	RES NETWORK, 10K	11236	767-101R10K
Z3	080119	RES NETWORK, 220K	91637	SOMC-1603-224K
Z4	080117	RES NETWORK, 16P8R, 47K	73138	628-AL-473J
Z5	080119	RES NETWORK, 220K	91637	SOMC-1603-224K
Z6	080117	RES NETWORK, 16P8R, 47K	73138	628-AL-473J
Z7	080119	RES NETWORK, 220K	91637	SOMC-1603-224K
Z8	080117	RES NETWORK, 16P8R, 47K	73138	628-AL-473J
Z9	080119	RES NETWORK, 220K	91637	SOMC-1603-224K
Z10	080117	RES NETWORK, 16P8R, 47K	73138	628-AL-473J
Z11	080119	RES NETWORK, 220K	91637	SOMC-1603-224K
Z12	080117	RES NETWORK, 16P8R, 47K	73138	628-AL-473J
(35)1	401951	PCB ASSY., LBUS JUMPER	21793	401951
(37)1	411908	PCB 1260-54 (UNLOADED)	21793	411908
(41)1	455687-002	PANEL, FRONT, SMC CONNECTOR	21793	455687-002
(42)1	501984	BRACKET, SUPPORT, PCB	57349	VME82000
(43)A/R	500009	TUBING, SHRINK, .12 ID, BLK	29005	RNF-100-1-1/8
(44)A/R	500254	CABLE, COAXIAL, 50 OHM	92194	9178S
(48)1	601195	PLUG, JUMPER, 0.1 CTR, LOW PROFILE	00779	530153-2
(56)30	601944	CONNECTOR, RECEPTACLE, PANEL MOUNT SMC	98291	50-[illegible]
(57)12	610777	CABLE TIE	16956	08-432
(60)60	611257	WASHER, SHOULDER #10	86928	5507-[illegible]
(51)3	611258-001	STANDOFF, SWAGE 4-40 X .170	06540	8091-118-6-440-29
(52)1	611264	HANDLE, EXTRACTOR, BOTTOM	62559	20817-327
(53)1	515016	SCREW, PPH, 2-56 X .375	-	-
(64)1	615514	SCREW, PFH, 2-56 X .312	-	-
(65)1	611265	HANDLE, EXTRACTOR, TOP	62559	20817-328
(66)2	617002	NUT, HEX, 2-56	-	-
(67)1	617101	WASHER, FLAT, LIGHT SERIES, #2	-	-
(68)A/R	920962	LOCTITE, 242, MED STR.	05972	272
(69)5	611266	MOUNTING HARDWARE, HANDLE	62559	21100-745
(70)1	921148	LABEL SET, VXI-VME	21793	921148
(71)2	616405	SCREW, PFH, M2.5-.45 X 12	-	-

ENGINEERING WIRE LIST

FROM	TO	CONDUCTOR TYPE, GAUGE, COLOR	PART NO.	WIRE LENGTH	REFERENCE
E POINT	CHANNEL				
E1	00	CABLE, COAX, 50 OHM	500254	A/R	
E2	01	CABLE, COAX, 50 OHM	500254	A/R	
E3	02	CABLE, COAX, 50 OHM	500254	A/R	
E4	03	CABLE, COAX, 50 OHM	500254	A/R	
E5	COM 0	CABLE, COAX, 50 OHM	500254	A/R	
E6	10	CABLE, COAX, 50 OHM	500254	A/R	
E7	11	CABLE, COAX, 50 OHM	500254	A/R	
E8	12	CABLE, COAX, 50 OHM	500254	A/R	
E9	13	CABLE, COAX, 50 OHM	500254	A/R	
E10	COM 1	CABLE, COAX, 50 OHM	500254	A/R	
E11	20	CABLE, COAX, 50 OHM	500254	A/R	
E12	21	CABLE, COAX, 50 OHM	500254	A/R	
E13	22	CABLE, COAX, 50 OHM	500254	A/R	
E14	23	CABLE, COAX, 50 OHM	500254	A/R	
E15	COM 2	CABLE, COAX, 50 OHM	500254	A/R	
E16	30	CABLE, COAX, 50 OHM	500254	A/R	
E17	31	CABLE, COAX, 50 OHM	500254	A/R	
E18	32	CABLE, COAX, 50 OHM	500254	A/R	
E19	33	CABLE, COAX, 50 OHM	500254	A/R	
E20	COM 3	CABLE, COAX, 50 OHM	500254	A/R	

RACAL-DANA Instruments, Inc., 4 Goodyear St., Irvine, CA 92718

DOCUMENT TITLE	SIZE	CODE NO.	DOCUMENT NO.	REV
PCB ASSY, 1260-54	A	21793	401908	A
	DRN			

DOC. NO. 401908

ENGINEERING WIRE LIST

FROM	TO	CONDUCTOR TYPE, GAUGE, COLOR	PART NO.	WIRE LENGTH	REFERENCE
E21	40	CABLE, COAX, 50 OHM	500254	A/R	
E22	41	CABLE, COAX, 50 OHM	500254	A/R	
E23	42	CABLE, COAX, 50 OHM	500254	A/R	
E24	43	CABLE, COAX, 50 OHM	500254	A/R	
E25	COM 4	CABLE, COAX, 50 OHM	500254	A/R	
E26	50	CABLE, COAX, 50 OHM	500254	A/R	
E27	51	CABLE, COAX, 50 OHM	500254	A/R	
E28	52	CABLE, COAX, 50 OHM	500254	A/R	
E29	53	CABLE, COAX, 50 OHM	500254	A/R	
E30	COM 5	CABLE, COAX, 50 OHM	500254	A/R	

DOC NO 401908

RACAL-DANA Instruments, Inc., 4 Goodyear St., Irvine, CA 92718

DOCUMENT TITLE	SIZE	CODE NO	DOCUMENT NO	REV
PCB ASSY, 1260-54	A	21793	401908	A
	DRN			

List of Suppliers

FSC	SUPPLIER
00779	AMP INC. HARRISBURG, PA
01295	TEXAS INSTRUMENTS INC. DALLAS, TX
01526	GENICOM CORP. WAYNESBORO, VA
02735	RCA (SOLID STATE DIV.) SOMERVILLE, NEW JERSEY
03508	GENERAL ELECTRIC CO. (SEMI-CONDUCTOR PRODUCTS) AUBURN, NY
04713	MOTOROLA INC. (SEMICONDUCTOR PRODUCTS DIV) PHOENIX, AZ
05397	UNION CARBIDE CORP (MATERIALS SYSTEMS DIV) CLEVELAND, OHIO
05972	LOCTITE CORP HARTFORD, CONN
06383	PANDUIT CORP TINLEY PARK, CA
06540	AMATOM ELECTRONIC HARDWARE NEW ROCHELLE, NY
06776	ROBINSON NUGENT INC. NEW ALBANY, IN
07263	FAIRCHILD (SEMICONDUCTOR DIV.) MOUNTAIN VIEW, CA
08261	SPECTRA-STRIP CORP GARDEN GROVE, CA
11236	CTS OF BERNE INC. BERNE, INDIANA
16956	DENNISON MFG. CO. FRAMINGTON, MA
18324	SIGNETICS INC. SUNNYVALE, CA
21793	RACAL-DANA INSTRUMENTS INC. IRVINE, CA
22526	DUPONT CONNECTOR CO. NEW CUMBERLAND, PA
27014	NATIONAL SEMI-CONDUCTOR CORP. SANTA CLARA, CA

FSC	SUPPLIER
29005	STORM PRODUCTS CO. LOS ANGELES, CA
34359	THREE (3) M CO. (COMMERCIAL TAPE DIV.) ST. PAUL, MN
52072	CIRCUIT ASSY. CORP. COSTA MESA, CA
52210	GETTING ENGRG & MFG. CO. SPRING MILLS, PA
53387	THREE (3) M CO. ST. PAUL, MN
55322	SAMTEC, INC. NEW ALBANY, IN
56289	SPAGUE ELECTRIC CO. N. ADAMS, MA
61529	AROMAT CORP. CUPERTINO, CA
62559	SCHROFF, INC. WARWICK, RI
65832	AMERICAN RESEARCH ENGRG ELGIN, IL
70903	BELDEN CORP. CHICAGO, IL
73138	BECKMAN INSTRUMENTS FULLERTON, CA
73445	AMPEREX ELECTRONIC CORP. HICKSVILLE, NY
78189	ILLINOIS TOOL WORKS, INC. (SHAKEPROOF, DIV.) ELGIN, IL
81349	MILITARY SPECIFICATION
86928	SEASTROM MFG CO. INC. GLENDALE, CA
91637	DALE ELECTRONICS INC. COLUMBUS, NEBRASKA
92194	ALPHA WIRE ELIZABETH, NEW JERSEY
95275	VITRAMON, INC. BRIDGEPORT, CONNECTICUT
98291	SEALECTRO CORP. MAMARONECK, NY

PRELIMINARY

1260-60 18GHz MICROWAVE SWITCH MODULE

1260 VXI SWITCHING CARD

RACAL-DANA

RACAL-DANA INSTRUMENTS INC.

4 Goodyear Street, P.O. Box C-19541, Irvine, CA 92713
Telephone: 714/859-8999, Fax: 714/859-2505

RACAL INSTRUMENTS, LTD.

480 Bath Road, Slough, Berkshire, SL1 6BE, England
Telephone: 44-628 604455, Fax: 44-628 662017

RACAL SYSTEMS ELECTRONIQUE S.A.

18 Avenue Dutartre, 78150 Le Chesnay, France
Telephone: 33-1-3-955-8888, Fax: 33-1-3-955-6735

RACAL ELEKTRONIK SYSTEMS GmbH

Frankenforster Strasse 21, D-5060 Bergisch-Gladbach 1, Federal Republic of Germany
Telephone: 49-22-04-60081, Fax: 49-22-04-21491

RACAL SYSTEMS ELETTRONICA

Via Roma, 108/PAL, E1, 20060 Cassina de Pecchi, Milan, Italy
Telephone: 39-2-9514717/737/770, Fax: 39-2-9514522

RACAL

PUBLICATION DATE: NOVEMBER 1992

Copyright © 1992 by Racal-Dana Instruments Inc. Printed in the United States of America. All rights reserved.

This book or parts thereof may not be reproduced in any form without written permission of the publishers.

TABLE OF CONTENTS

SECTION 1
1.0 1260-60A,B Module Specifications 1-1

SECTION 2
2.0 Installation Instructions 1-4
2.1 Unpacking and Inspection 1-4
2.2 Reshipment Instructions 1-4
2.3 Option 01 Installation 1-4
2.4 Module Installation 1-4
2.5 Relay Bank Configuration 1-4

SECTION 3
3.0 1260-A,B Syntax 1-6
3.1 Module Specific Syntax 1-6

SECTION 4
4.0 Connector Pin Configuration 1-9
4.1 RF Relays 1-9
4.2 Relay Banks 1-9

SECTION 5
5.0 Theory of Operation 1-14
5.1 PCB Assemblies 1-14

SECTION 6
ASSEMBLY DRAWINGS 1-15

SECTION 7
PARTS LIST 1-15

FIGURES

4-1 1260-60A,B Front Panel 1-10
4-2 Relay Bank Pin Configuration (J1) 1-11
4-3 Internal Supply Sink Driver Example 1-12
4-4 External Supply Sink Driver Example 1-12
4-5 Internal Supply Source Driver Example 1-13
4-6 External Supply Source Driver Example 1-13

TABLES

4-1 1260-60A,B Pin Assignments 1-11

1.0 1260-60A,B Module Specification

The 1260-60A,B consists of three 1P2T, 18 GHz switches and two 1X12 switches. The 1x12 switches are used to drive external relays, although other applications are possible.

Specifications

Frequency Range	DC to 18 GHz
Maximum Continuous Wave Power per Channel (Cold Switching)	100 MHz 400 W 1 GHz 150 W 10 GHz 50 W 18 GHz 40 W
User Connectors on Module	SMA
RF Impedance	50 Ohms, nominal
Termination	50 Ohms, nominal (1260-60B only)
Insertion Loss, dB Max	0.2 DC - 4 GHz 0.3 4 GHz - 8 GHz 0.4 8 GHz - 12 GHz 0.5 12 GHz - 18 GHz
Isolation, dB Min	80 DC - 4 GHz 70 4 GHz - 8 GHz 60 8 GHz - 18 GHz
VSWR, Max	1.2:1 DC - 4 GHz 1.3:1 4 GHz - 8 GHz 1.4:1 8 GHz - 12 GHz 1.5:1 12 GHz - 18 GHz
Minimum Option 01 Hardware Revision	401901-005 Rev. B
Minimum Option 01 Firmware Revision	231417-001, Rev. D 231417-002, Rev. D

1x12 Switch Arrays Specifications

User Connector	34-Pin Connector. Body Part #601855-034, Solder Type Pins #601857
Number of Banks	2
Number of Switches per Bank	12, 1-wire
Relay Driver Configurations (User Configurable)	Source Driver, External Supply Source Driver, VXI +5 V Supply Source Driver, VXI +12 V Supply Source Driver, VXI +24 V Supply Sink Driver, External Supply Sink Driver, VXI +5 V Supply Sink Driver, VXI +12 V Supply Sink Driver, VXI +24 V Supply

(External flyback-suppression diodes are required when switching inductive loads.)

Maximum Total VXI Current Available to Drive External Loads	+24 V - .75 A (May be further limited by mainframe capability) +12 V - 1 A (May be further limited by mainframe capability) +5 V - 2 A (May be further limited by mainframe capability)
Maximum Current per Bank	2 A (Internal or External Supply)
Maximum Current per switch	.5 A
Maximum Switchable Voltage	30V, DC Only
Maximum Switchable Power	30W
Path Resistance	
Worst Case	< 1.8 Ohms
End of Life	< 2.7 Ohms
Switching Time	TBD, 1 Relay

General

Power Requirements (I_{pm})	+5 V: 0.4 A (2.8 A with Option 01 installed) plus current drawn by external loads on 1x12 relay banks +12 V: current drawn by external loads on 1x12 relay banks +24 V: 10 mA per relay (energized) plus current drawn by external loads on 1x12 relay banks
Cooling Requirements	TBD Airflow TBD Backpressure
Weight	TBD Without Option 01 TBD With Option 01

2.0 Installation Instructions

2.1 Unpacking and Inspection

Before unpacking the switching module, check the exterior of the shipping carton for any signs of damage. All irregularities should be noted on the shipping bill. Remove the instrument from its carton, preserving the factory packaging as much as possible. Inspect the switching module for any defect or damage. Notify the carrier immediately if any damage is apparent. Have a qualified person check the instrument for safety before use.

2.2 Reshipment Instructions

Use the original packing if it is necessary to return the switching module to Racal-Dana for calibration or servicing. The original shipping carton and the instrument's plastic foam will provide the necessary support for safe reshipment. If the original packing is unavailable, wrap the switching module in plastic sheeting and use plastic spray foam to surround and protect the instrument. Reship in either the original or a new, sturdy shipping carton.

2.3 Option 01 Installation

Installation of the Option 01 to the 1260-60A,B is described in the Installation section of the 1260-Series VXI Switching Cards Manual.

2.4 Module Installation

Installation of the 1260-60A,B Switching Module into a VXI mainframe, including the setting of DIP switches, is described in the Installation section of the 1260 Series VXI Switching Cards Manual. The ID byte DIP switches should be set as follows:

1260-60A	5=ON	6=ON
1260-60B	5=ON	6=ON

Note that incorrect setting of the ID byte DIP switches will cause an incorrect module ID to be reported to the user in response to a PDATAOUT command. All other module functionality is unaffected by the setting of the ID byte switches.

2.5 Relay Bank Configuration

If two banks of DC relays are to be used, various internal jumpers must be installed. Examples of four possible configurations are shown in Figures 4-3 through 4-6. The card is shipped from the factory without any jumpers installed.

To access the jumpers, remove the right side cover from the module. The jumpers are located on the large PCB Assembly. There are two banks of relays. Each bank is configured independently, and the two configurations do not have to match. The banks are designated Bank A and Bank B.

Sink/Source Configuration

A sink driver connects its output to ground to energize a load; a source connects its output to B+ to energize a load. Eight push-on jumpers are to be installed as shown below:

Bank A Source Driver:	W5
Bank A Sink Driver:	W6
Bank B Source Driver:	W11
Bank B Sink Driver:	W12

Power - Bank A

If an external supply is to be used, the jumpers at locations W3 and W4 are to be removed. If the VXI +5 V supply is to be used, eight jumpers are to be installed at location W3 (1-2, 3-4, 5-6, etc.). If the VXI +12 V supply is to be used, three jumpers are to be installed at location W4 (1-2, 3-4, and 5-6). If the VXI +24 V supply is to be used, the three jumpers are to be installed at location W4 (11-12, 13-14, 15-16).

Power - Bank B

If an external supply is to be used, the jumpers at locations W8 and W9 are to be removed. If the VXI +5 V supply is to be used, eight jumpers are to be installed at location W8 (1-2, 3-4, 5-6, etc.). If the VXI +12 V supply is to be used, three jumpers are to be installed at location W9 (1-2, 3-4, and 5-6). If the VXI +24 V supply is to be used, three jumpers are to be installed at location W9 (11-12, 13-14, 15-16).

The right cover can now be reinstalled on the module.

3.0 1260-60A,B Module Specific Syntax

The Module Specific Syntax for the 1260-60A,B is required for use in the OPEN and CLOSE commands. It will also appear in data output by the 1260 Series Master in response to the PDATAOUT command.

3.1 The Module Specific Syntax for the 1260-6A,B module is as follows:

<mod addr>.<bank no><relay no>

where <mod addr> is the address of the 1260-60A,B.

NOTE

The <mod addr> used here is NOT the VXIbus defined logical address of the 1260 Series Master. It is peculiar to the 1260 Series and describes the switching module in relation to the 1260 Master. This address corresponds to the binary value of the switch setting of SW1 on the switching module PCB.

<bank no> is a reference to the bank of the relay to be switched. It is a single digit number.

The <bank no> refers to the following relay banks:

0	1x12 Bank A
1	1x12 Bank B
2	1x2 Relays S1, S2, S3

<relay no> refers to the relay to be operated. This is a two-digit number. For Bank A and Bank B, this value must be between 00 and 11. For relay S1 it is 00, for S2 - 01, and for S3 - 02. Note the leading 0 for relays 00 through 09 is required.

Refer to Figures 4-1, 4-2, and Table 4-1 for banks, relay numbers, and connector pins for the 1260-60A,B module.

If more than one connection is to be made or broken on the 1260-60A,B with contiguous relays, the following format is supported:

<mod addr>.<bank no><relay no>-<bank no><relay no>

Multiple groups of relays can be specified on a single command line by separating the path designators by commas. Command lines terminate at the end of the line.

EXAMPLE:

OPEN 3.000,004-011,100-111,201,203

The PDATAOUT command causes the specified module to transmit the CLOSED state of the relays in the 1260-60A,B module. The syntax used is:

PDATAOUT <mod addr>[;<mod addr>][;<mod addr>]....

The response to the PDATAOUT command for the 1260-60A,B is as follows:

<header>
<mod addr>. <bank no><group no>[,...]
<bank no><group no>[,...]
<mod addr>.END

where <header> is as follows:

1260-60A,B: <mod addr>. 1260-60A,B Triple SPDT MICROWAVE SWITCHING MODULE

Note the actual <header> sent is determined by the setting of the ID Byte DIP switches on the module.

The PSETUP command causes the specified module to transmit its sequence mode. The supported sequence modes are IMM (Immediate), BBM (Break-Before-Make), and MBB (Make-Before-Break). The syntax used is:

PSETUP <mod addr>[;<mod addr>][;<mod addr>]....

The response to the PSETUP command for the 1260-60A,B is as follows:

<header>
<mod addr>.<seq mode>
<mod addr>.END

where <seq mode> is IMM, BBM, or MBB, and

where <header> is as follows:

1260-60A,B: <mod addr>. 1260-60A,B Triple SPDT MICROWAVE SWITCHING MODULE

Note the actual <header> sent is determined by the setting of the ID Byte DIP switches on the module.

The SETUP command affects only the DC relays in Banks A and B. These relays may be programmed as Break-Before-Make, Make-Before-Break, or Immediate. The microwave relays (S1 through S3) are always implemented as Break-Before-Make (BBM).

The 1260-60A,B supports most standard 1260 features. These include Confidence Mode, Equate/Exclude/Scan Lists commands, and the STORE/RECALL commands.

WARNING

The state of the RF relays should NOT be changed when a signal is present. The relays should be "cold-switched" only. The recommended procedure for ensuring that an OPEN or CLOSE command has been completed is as follows:

1. **Enable the confidence mode for the relays. This is done by sending the command:**

   CNF ON

2. **Each time a relay is opened or closed, ensure the operation is complete using the following procedure:**

   a. **Send the OPEN or CLOSE command, e.g.:**
      OPEN 3.200
   b. **Send the YERR command to read back the error**
      YERR
   c. **Read the error result. The error result should be:**
      error 000.00

4.0 Connector Pin Configuration

4.1 RF Relays

Figure 4-1 shows the location of the three RF switches on the front panel of the 1260-60A,B module.

4.2 Relay Banks

Figure 4-2 shows the pin locations for the 34-pin Relay Bank connector, J1. Table 4-1 lists the J1 pin signals. Connector J1 is Racal-Dana Part Number 601856-034. The mating connectors are Racal-Dana Part Number 601855-034 for the connector body, and 601857 for the pins.

Each of the two relay banks can be independently configured as a sink or a source driver. Either the VXI mainframe or an external supply can be selected.

WARNING

The user must use caution when wiring to the module to prevent damage to the relay banks.

The 1260-60A,B contains some internal protection circuitry. The internal current sourcing and handling capabilities of the module and the mainframe must not be exceeded. Properly interface external loads, especially if they are inductive. If an external supply is used, the external B+ and B- lines MUST be connected to the External B+ and the External Ground pins on J1. Flyback-clamping suppression diodes MUST be connected across any inductive loads. Figures 4-3 through 4-6 show correct methods interfacing to the 1260-60A,B relay banks.

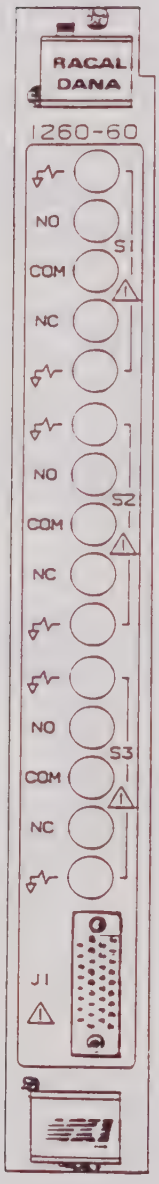

Figure 4-1, 1260-60A,B Front Panel

Table 4-1, 1260-60A,B Pin Assignments

Bank A Pin	Function	Bank B Pin	Function
A,C	External B+	B,D	External B+
HH,JJ,KK	External Ground	HH,JJ,KK	External Ground
LL,MM,NN	External Ground	LL,MM,NN	External Ground
W	Contact 0	BB	Contact 0
F	Contact 1	P	Contact 1
V	Contact 2	N	Contact 2
M	Contact 3	H	Contact 3
U	Contact 4	R	Contact 4
Z	Contact 5	X	Contact 5
DD	Contact 6	CC	Contact 6
FF	Contact 7	AA	Contact 7
Y	Contact 8	EE	Contact 8
L	Contact 9	T	Contact 9
S	Contact 10	J	Contact 10
K	Contact 11	E	Contact 11

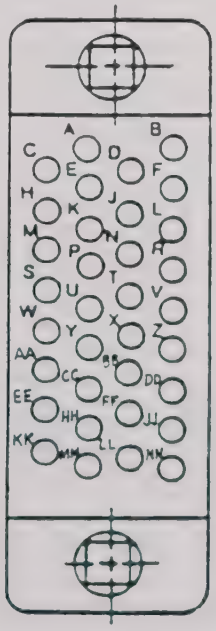

Figure 4-2, Relay Bank Pin Configuration (J1)

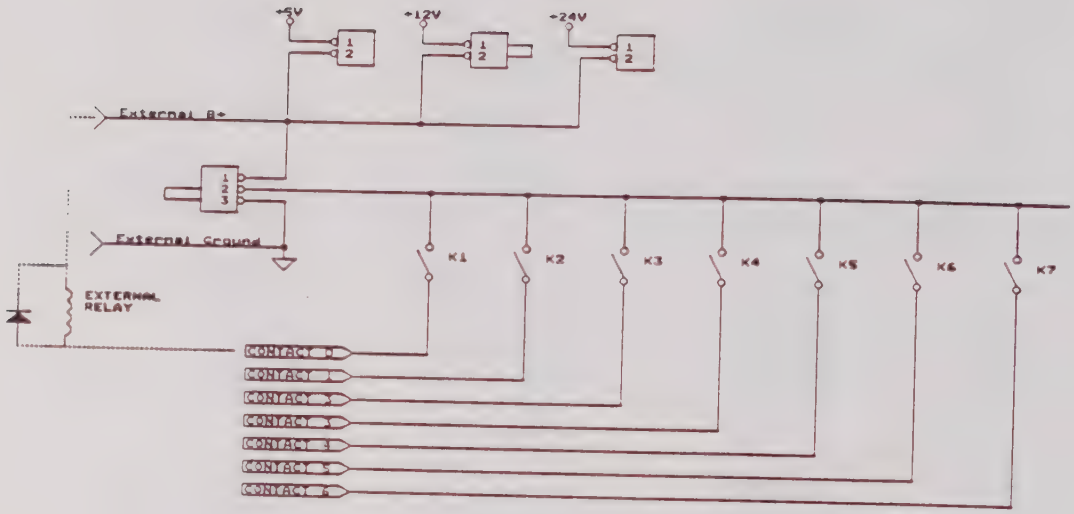

Figure 4-3, Internal Supply Sink Driver Example

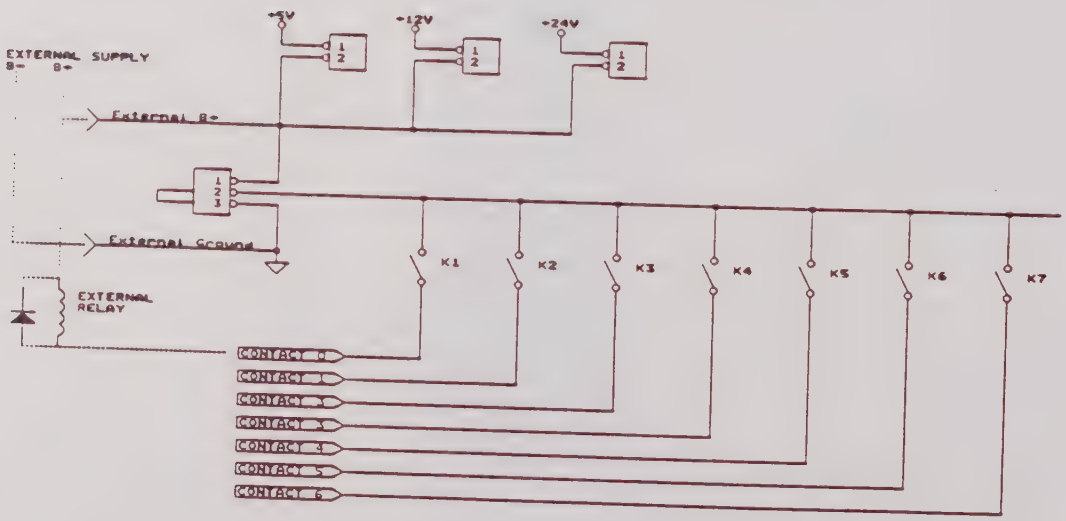

Figure 4-4, External Supply Sink Driver Example

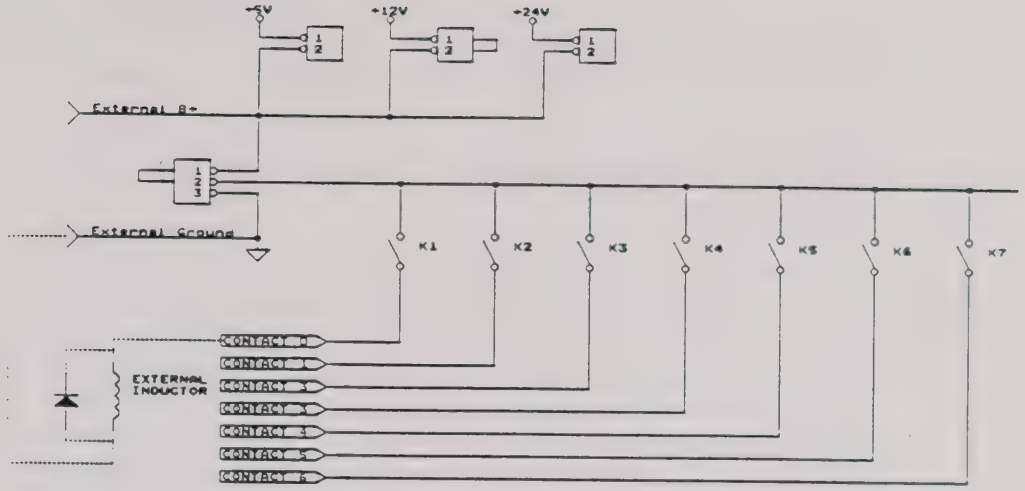

Figure 4-5, Internal Supply Source Driver Example

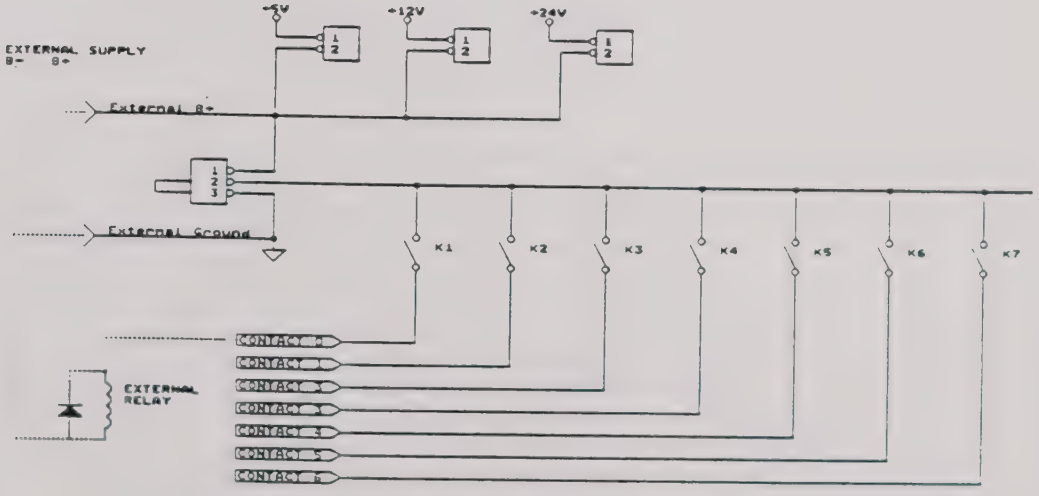

Figure 4-6, External Supply Source Driver Example

5.0 Theory of Operation

5.1 PCB Assemblies

The 1260-60A,B consists of two PCB assemblies. The small one is used only to mount connector J1 to the front panel.

The main logic PCB assembly contains DC relay banks, 1260 Local Bus interface circuitry, and drivers for both the relay bank and the RF relays. The VXI interface is described in the Theory of Operation section of the 1260 Series VXI Switching Cards Manual. The relay driver circuitry is contained in monolithic IC driver chips. The relay banks are shown in Figures 4-3 through 4-6. Not shown in these figures are internal clamp diodes. These diodes will clamp minor inductance effects, such as those caused by wiring; but they are not intended to replace suppression diodes across the solenoid coils of external relays, or other inductive loads. Referring to the schematic diagram, the diodes between the contact lines and ground clamp switch-to-open transients when the bank is used as a source driver. The diodes between the contact lines and the External A+,B+ clamp switch-to-open transients when the bank is used as a sink driver.

6.0 Assembly Drawings

407157	Final Assembly, 1260-60A,B
407160	PCB Assembly, Connector Interface
435160	Schematic, Connector Interface
407159	PCB Assembly, 1260-60A,B
435056	Schematic, 1260-64/60/15

7.0 Parts List

407157	Final Assembly, 1260-60A,B
407158	Ship Kit, 1260-60A,B
405057	PCB Assembly, Connector Interface
407159	PCB Assembly, 1260-60A,B

PUBLICATION NO. 980673-038

1260-64A-S-1479
18GHz MICROWAVE SWITCH MODULE

1260 VXI SWITCHING CARD

RACAL INSTRUMENTS

RACAL INSTRUMENTS INC.
4 Goodyear Street, P. O. Box C-19541, Irvine, CA 92718
Telephone: 714/859/8999, 800/722-2528, Fax: 714/859-2505

RACAL INSTRUMENTS, LTD.
480 Bath Road, Slough, Berkshire, SL1 6BE, United Kingdom
Telephone: +44 (0) 1628 604455, Fax: +44 (0) 1628 662017

RACAL SYSTEMS ELECTRONIQUE S.A.
18 Avenue Dutartre, 78150 Le Chesnay, France
Telephone: (1) 3955 8888, Fax: (1) 3955 6735

RACAL ELEKTRONIK SYSTEM GmbH
Frankenforster Strasse 21, 51427 Bergisch Gladback 1, Germany
Telephone: 2204 92220, Fax: 2204 21491

RACAL SYSTEM ELETTRONICA Srl
Strada 2 - Palazzo C 4, 20090 Milanofiori Assago, Milano, Italy
Telephone: (02) 5750.1796, Fax: (02) 5750.1828

RACAL

Copyright©1996 by Racal Instruments Inc. Printed in the United States of America. All rights reserved.
This book or parts thereof may not be reproduced in any form without written permission of the publishers.

Publication No. 980673-038

MODEL 1260-64A-S-1479

February, 1996

The Racal Instruments Model 1260-64A-S-1479 (P/N 407089-S-1479) is the same as the standard Model 1260-64A with the following exceptions:

1. Position 6 of each Microwave relay is wired to permit simultaneous actuation with positions 1 through 5 for each of the four microwave switches. The alternate coil energization path is provided through general purpose relay contacts.

2. NOTE! Confidence Mode should not be selected by the user as false errors will be detected when actuating Position 6 through alternate coil path.

3. NOTE! The user control software must limit the quantity of energized Microwave relay coils to four.

Add the following parts to assembly 407089, 1260-64A:

Part Number	Description	Quantity
500204	Wire, Teflon, Solid, 28 Gauge, White	A/R
980673-038	Manual, 1260-64A-S-1479	1

Delete item 11, P/N 980673-010, Manual 1260-64 from Shipping Kit P/N 407090.

1260-64 18GHz MICROWAVE SWITCH MODULE

1260 VXI SWITCHING CARD

RACAL-DANA

RACAL-DANA INSTRUMENTS INC.

4 Goodyear Street, P.O. Box C-19541, Irvine, CA 92713
Telephone: 714/859-8999, Fax: 714/859-2505

RACAL INSTRUMENTS, LTD.

480 Bath Road, Slough, Berkshire, SL1 6BE, England
Telephone: 44-628 604455, Fax: 44-628 662017

RACAL SYSTEMS ELECTRONIQUE S.A.

18 Avenue Dutartre, 78150 Le Chesnay, France
Telephone: 33-1-3-955-8888, Fax: 33-1-3-955-6735

RACAL ELEKTRONIK SYSTEMS GmbH

Frankenforster Strasse 21, D-5060 Bergisch-Gladbach 1, Federal Republic of Germany
Telephone: 49-22-04-60081, Fax: 49-22-04-21491

RACAL SYSTEMS ELETTRONICA

Via Roma, 108/PAL, E1, 20060 Cassina de Pecchi, Milan, Italy
Telephone: 39-2-9514717/737/770, Fax: 39-2-9514522

RACAL

PUBLICATION DATE: APRIL 1992

Copyright © 1992 by Racal-Dana Instruments Inc. Printed in the United States of America. All rights reserved.
This book or parts thereof may not be reproduced in any form without written permission of the publishers.

TABLE OF CONTENTS

1260-64 18GHz MICROWAVE SWITCH MODULE

1.0	1260-64 Module Specification	1-1
2.0	Installation	1-4
2.1	Unpacking and Inspection	1-4
2.2	Reshipment Instructions	1-4
2.3	Option 01 Installation	1-4
2.4	Module Installation	1-5
2.5	Relay Bank Configuration	1-5
3.0	1260-64 Module Specific Syntax	1-7
3.1	Syntax	1-7
4.0	Connector Pin Configuration	1-10
4.1	RF Relays	1-10
4.2	Relay Banks	1-10
5.0	Theory of Operation	1-15
6.0	Drawings	
7.0	Parts List	

TABLES

4-1	Relay Bank Pin Configuration (J1)	1-12

FIGURES

4-1	1260-64 Front Panel	1-11
4-2	Relay Bank Pin Configuration (J1)	1-12
4-3	Internal Supply Sink Driver Example	1-13
4-4	External Supply Sink Driver Example	1-13
4-5	Internal Supply Source Driver Example	1-14
4-6	External Supply Source Driver Example	1-14

1.0 1260-64 Module Specification

The 1260-64 consists of up to four 1P6T, 18 GHz switches and two 1X16 switches. The 1x16 switches are intended to be used to drive external relays, although other applications are possible.

Specifications

Quantity of RF Switches:	1260-64A: 4 18 GHz switches 1260-64B: 2 18 GHz switches 1260-64C: 1 18 GHz switch
User Connectors on Module:	SMA
RF Impedance:	50 ohms, nominal
Insertion Loss, dB Max:	0.2 DC - 3 GHz 0.3 3 GHz - 8 GHz 0.4 8 GHz - 12 GHz 0.5 12 GHz - 18 GHz
Isolation, dB Min:	80 DC - 3 GHz 70 3 GHz - 8 GHz 60 8 GHz - 18 GHz
VSWR, Max:	1.2:1 DC - 3 GHz 1.3:1 3 GHz - 8 GHz 1.4:1 8 GHz - 12 GHz 1.5:1 12 GHz - 18 GHz
Minimum Option 01 Hardware Revision	401901-004 Rev. D, or 401901-005 Rev. B
Minimum Option 01 Firmware Revision	231417-001, Rev. 10.1B 231417-002, Rev. 10.1B

1x16 Switch Arrays Specifications:

User Connector:	50-Pin Connector. Body Part #601855-050, Solder Type Pins #601857.
Number of Banks:	2
Number of Switches per Bank:	16, 1-wire
Relay Driver Configurations: (User Configurable)	Source Driver, External Supply Source Driver, VXI +5V Supply Source Driver, VXI +12V Supply Source Driver, VXI +24V Supply Sink Driver, External Supply Sink Driver, VXI +5V Supply Sink Driver, VXI +12V Supply Sink Driver, VXI +24V Supply

(External flyback-suppression diodes are required when switching inductive loads.)

Maximum Total VXI Current Available to Drive External Loads:	+24V - .5A (May be further limited by mainframe capability) +12V - .5A (May be further limited by mainframe capability) +5V - 6A (May be further limited by mainframe capability)
Maximum Current per Bank:	4A (Internal or External Supply)
Maximum Current per switch:	.5 Amp
Maximum Switchable Voltage:	30V, DC Only
Maximum Switchable Power: (Per Channel)	30W, 62.5 VA (Resistive Load)
Path Resistance:	
Worst Case:	< 1.8 ohms
End of Life:	< 2.7 ohms
Switching Time:	TBD, 1 Relay

General

Power Requirements (I_{pm}):	+5V: 0.4A (2.8A with Option 01 installed)
	+12V: 320 mA per RF relay (energized) plus current drawn by external loads on 1x16 relay banks.
	+24V: 10 mA per relay (energized)
Cooling Requirements:	TBD Airflow TBD Backpressure
Weight:	TBD w/o Opt. 01 TBD w/ Opt. 01

2.0 Installation Instructions

2.1 Unpacking and Inspection

Before unpacking the switching module, check the exterior of the shipping carton for any signs of damage. All irregularities should be noted on the shipping bill. Remove the instrument from its carton, preserving the factory packaging as much as possible. Inspect the switching module for any defect or damage. Notify the carrier immediately if any damage is apparent. Have a qualified person check the instrument for safety before use.

2.2 Reshipment Instructions

Use the original packing if it is necessary to return the switching module to Racal-Dana for calibration or servicing. The original shipping carton and the instrument's plastic foam will provide the necessary support for safe reshipment. If the original packing is unavailable, wrap the switching module in plastic sheeting and use plastic spray foam to surround and protect the instrument. Reship in either the original or a new, sturdy shipping carton.

2.3 Option 01 Installation

Installation of the Option 01 to the 1260-64 is described in the Installation section of the 1260-Series VXI Switching Cards Manual. Note that lockout keying for the double-wide 1260-64 module differs from that described in the 1260 manual section.

2.3.1 Lockout Keys

The lockout key configuration for the 1260-64 is slightly different from that of the other 1260 modules because the 1260-64 occupies two VXI slots. Lockout key mounting holes are present in the front panel for each of the occupied VXI slots.

If the module is **not** the leftmost nor the rightmost module in the group, lockout key "A" (Racal-Dana P/N 455540) should be installed in the location corresponding to the module's left slot. Lockout key "C" (Racal-Dana P/N 455541) should be installed in the location corresponding to the module's right slot.

If the module is the leftmost module in the group, lockout key "C" should be installed in the location corresponding to the module's right slot.

If the module is the rightmost module in the group, lockout key "A" should be installed in the location corresponding to the module's left slot.

2.4 Module Installation

Installation of the 1260-64 Switching Module into a VXI mainframe, including the setting of DIP switches, is described in the Installation section of the 1260-Series VXI Switching Cards Manual. The ID byte DIP switches should be set as follows:

1260-64A: 5=OFF 6=OFF
1260-64B: 5=ON 6=OFF
1260-64C: 5=OFF 6=ON

Note that incorrect setting of the ID byte DIP switches will cause an incorrect module ID to be reported to the user in response to a TBD command. All other module functionality is unaffected by the setting of the ID byte switches.

2.5 Relay Bank Configuration

If two banks of DC relays are to be used, various internal jumpers must be installed. Examples of four possible configurations are shown in Figures 4-3 through 4-6. The card is shipped from the factory without any jumpers installed.

To access the jumpers, remove the right side cover from the module. The jumpers are located on the large PCB Assembly. There are two banks of relays. Each bank is configured independently, and the two configurations do not have to match. The banks are designated Bank A and Bank B.

The first consideration when configuring the relay banks is whether the bank is to act as a source driver or a sink driver. (A sink driver connects its output to ground to energize a load; a source connects its output to B+ to energize a load.) Eight push on jumpers are to be installed as shown below:

Bank A Source Driver: W5.
Bank A Sink Driver: W6.
Bank B Source Driver: W11.
Bank B Sink Driver: W12.

The next consideration is the source of power for the external loads on Bank A. If an external supply is to be used, the jumpers at locations W3 and W4 are to be removed. If the VXI +5V supply is to be used, eight jumpers are to be installed at location W3. (1-2, 3-4, 5-6, etc.) If the VXI +12V supply is to be used, three jumpers are to be installed at location W4 (1-2, 3-4, and 5-6) If the VXI +24V supply is to be used, the three jumpers are to be installed at location W4 (11-12, 13-14, 15-16).

The final consideration is the source of power for the external loads on Bank B. If an external supply is to be used, the jumpers at locations W8 and W9 are to be removed. If the VXI +5V supply is to be used, eight jumpers are to be installed at location W8. (1-2, 3-4, 5-6, etc.) If the VXI +12V supply is to be used, three jumpers are to be installed at location W9 (1-2, 3-4, and 5-6) If the VXI +24V supply is to be used, the three jumpers are to be installed at location W9 (11-12, 13-14, 15-16).

The right cover can now be reinstalled on the module.

3.0 1260-64 Module Specific Syntax

The Module Specific Syntax for the 1260-64 is required for use in the OPEN and CLOSE commands. It will also appear in data output by the 1260 Series Master in response to the PDATAOUT command.

3.1 The Module Specific Syntax for the 1260-64 module is as follows:

<mod addr>.<bank no><relay no>

where <mod addr> is the address of the 1260-64.

NOTE

The <mod addr> used here is NOT the VXIbus defined logical address of the 1260 Series Master. It is peculiar to the 1260 Series and describes the switching module in relation to the 1260 Master. This address corresponds to the binary value of the switch setting of SW1 on the switching module PCB.

<bank no> is a reference to the bank of the relay to be switched. It is a single digit number. The range for a valid <bank no> depends on the particular 1260-64 model used:

1260-64A:	$0 \leq$ <bank no> ≤ 5
1260-64B:	$0 \leq$ <bank no> ≤ 3
1260-64C:	$0 \leq$ <bank no> ≤ 2

The <bank no> refers to the following relay banks:

0	1x16 Bank A
1	1x16 Bank B
2	1x6 Relay S1
3	1x6 Relay S2 (A and B models only)
4	1x6 Relay S3 (A model only)
5	1x6 Relay S4 (A model only)

<relay no> refers to the relay to be operated. This is a two-digit number. For Bank A and Bank B, this value must be between 00 and 15. For relays S1, S2, S3, and S4, this must be between 00 and 05. Note the leading 0 for relays 00 through 09 is required.

3.1.1 Refer to Figures 4-1, 4-2, and Table 4-1 for banks, relay numbers, and connector pins for the 1260-64 module.

3.1.2 If more than one connection is to be made or broken on the 1260-64 with contiguous relays, the following format is supported:

<mod addr>.<bank no><relay no>-<bank no><relay no>

3.1.3 Multiple groups of relays can be specified on a single command line by separating the path designators by commas. Command lines terminate at the end of the line.

EXAMPLE:

OPEN 3.000,004-015,100-115,201,303

3.1.4 The PDATAOUT command causes the specified module to transmit the CLOSED state of the relays in the 1260-64 module. The syntax used is:

PDATAOUT <mod addr>[;<mod addr>][;<mod addr>]....

The response to the PDATAOUT command for the 1260-64 is as follows:

<header>
<mod addr>. <bank no><group no>[,...]
<bank no><group no>[,...]
<mod addr>.END

where <header> is as follows:

1260-64A: <mod addr>. 1260-64A Quad 1x6 MICROWAVE SWITCHING MODULE
1260-64B: <mod addr>. 1260-64B Dual 1x6 MICROWAVE SWITCHING MODULE
1260-64C: <mod addr>. 1260-64C Single 1x6 MICROWAVE SWITCHING MODULE

3.1.5 Note the actual <header> sent is determined by the setting of the ID Byte DIP switches on the module, and is independent of the number of microwave relays installed.

3.1.6 The PSETUP command causes the specified module to transmit its sequence mode. The supported sequence modes are IMM (Immediate), BBM (Break-Before-Make), and MBB (Make-Before-Break). The syntax used is:

PSETUP <mod addr>[;<mod addr>][;<mod addr>]....

The response to the PSETUP command for the 1260-64 is as follows:

3.1.7 The response to the PSETUP command for the 1260-64 is as follows:

<header>
<mod addr>.<seq mode>
<mod addr>.END

where <seq mode> is IMM, BBM, or MBB, and

where <header> is as follows:

1260-64A: <mod addr>. 1260-64A Quad 1x6 MICROWAVE SWITCHING MODULE
1260-64B: <mod addr>. 1260-64B Dual 1x6 MICROWAVE SWITCHING MODULE
1260-64C: <mod addr>. 1260-64C Single 1x6 MICROWAVE SWITCHING MODULE

3.1.8 Note the actual <header> sent is determined by the setting of the ID Byte DIP switches on the module, and is independent of the number of microwave relays installed.

3.1.9 The 1260-64 1x6 microwave relays (S1 through S4) each allow at most one of the six relays to be closed at any one time. The card implements an "implicit exclusion list" for each 1x6 microwave relay. For example, if the 1260-64 module address is 3, and relay 3.204 is currently closed, then the command:

CLOSE 3.201

will cause the card to open relay 3.204, and then close relay 3.201. Similarly, if the command:

CLOSE 3.200-205

is issued, the card will close only relay 3.205, with relays 3.200 through 3.204 being opened prior to closing relay 3.205.

3.1.10 The SETUP command affects only the DC relays in Banks A and B. These relays may be programmed as Break-Before-Make, Make-Before-Break, or Immediate. The microwave relays (S1 through S4) are always implemented as Break-Before-Make (BBM) to ensure that at most 1 of 6 relays are closed at any one time.

3.1.11 The 1260-64 supports most standard 1260 features. These include Confidence Mode, Equate/Exclude/Scan Lists commands, and the STORE/RECALL commands.

4.0 Connector Pin Configuration

4.1 RF Relays

4.1.1 Figure 4-1 shows the location of the four RF switches on the front panel of the 1260-64 module. The designations for each of the SMA male connectors on the switches are also shown.

4.2 Relay Banks

4.2.1 Figure 4-2 shows the pin locations for the 50-pin Relay Bank connector, J1. Table 4-1 lists the J1 pin signals. Connector J1 is Racal-Dana Part Number 601856-050. The mating connectors are Racal-Dana Part Number 601855-050 for the connector body, and 601857 for the pins.

4.2.2 Each of the two relay banks can be independently configured as a sink or a source driver. Either the VXI mainframe or an external supply can be selected.

WARNING

The user must use caution when wiring to the module to prevent damage to the relay banks.

4.2.3 The 1260-64 contains some internal protection circuitry. The internal current sourcing and handling capabilities of the module and the mainframe must not be exceeded. Properly interface external loads, especially if they are inductive. If an external supply is used, the external B+ and B- lines MUST be connected to the External B+ and the External Ground pins on J1. Flyback-clamping suppression diodes MUST be connected across any inductive loads. (Switching of AC inductive loads is not recommended.) Figures 4-3 through 4-6 show correct methods interfacing to the 1260-64 relay banks.

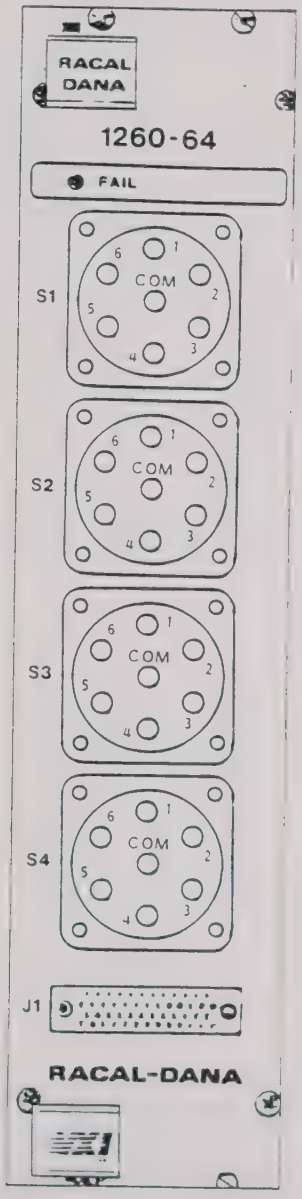

Figure 4-1, 1260-64 Front Panel

Table 4-1, 1260-64 Pin Assignments

Bank A Pin	Function	Bank B Pin	Function
A,C,E,H	External B+	B,D,F,J	External B+
x,y,z,AA	External Ground	CC,DD,EE	External Ground
z,AA,BB	External Ground	FF,HH	External Ground
d	Contact 0	p	Contact 0
L	Contact 1	V	Contact 1
b	Contact 2	T	Contact 2
S	Contact 3	M	Contact 3
a	Contact 4	W	Contact 4
k	Contact 5	e	Contact 5
t	Contact 6	r	Contact 6
w	Contact 7	m	Contact 7
j	Contact 8	u	Contact 8
R	Contact 9	Z	Contact 9
X	Contact 10	N	Contact 10
P	Contact 11	K	Contact 11
Y	Contact 12	U	Contact 12
h	Contact 13	c	Contact 13
v	Contact 14	n	Contact 14
s	Contact 15	f	Contact 15

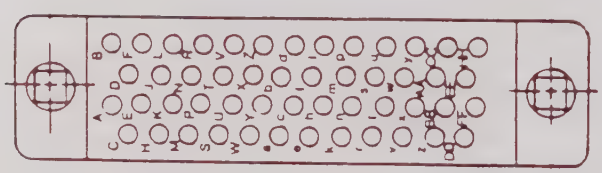

Figure 4-2, Relay Bank Pin Configuration (J1)

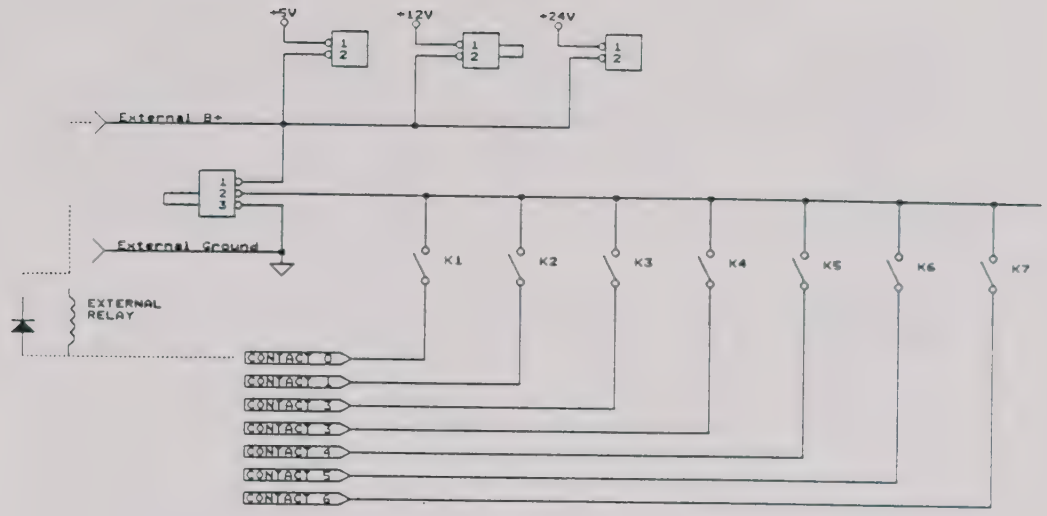

Figure 4-3, Internal Supply Sink Driver Example

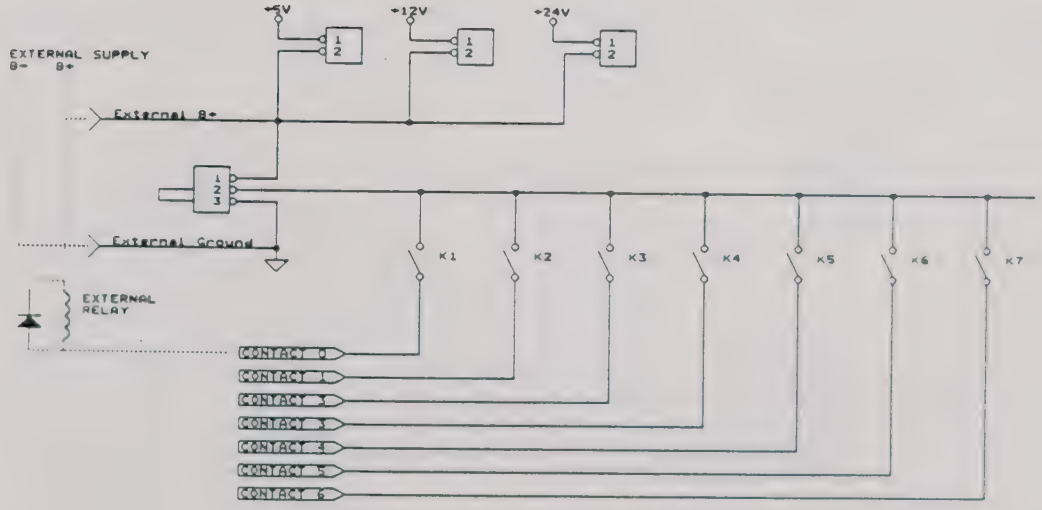

Figure 4-4, External Supply Sink Driver Example

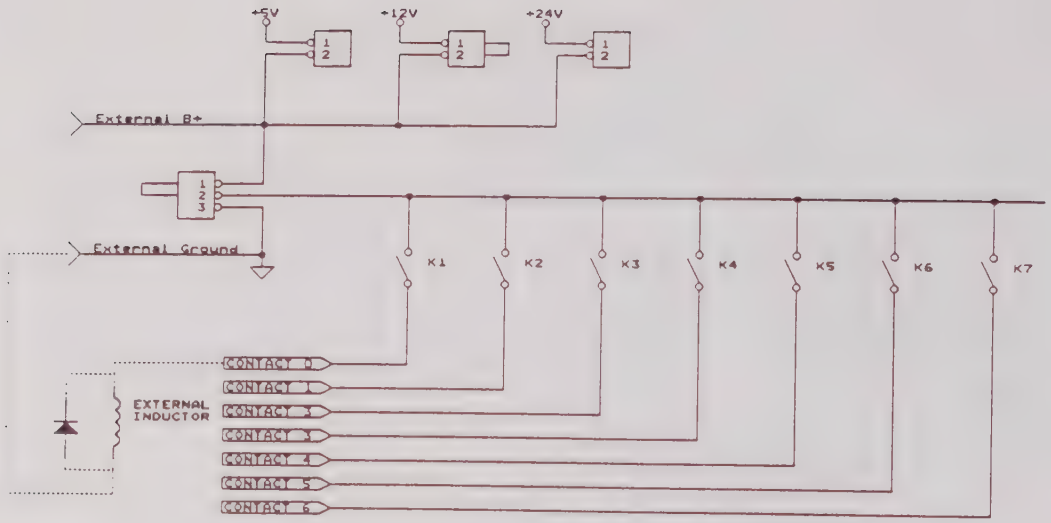

Figure 4-5, Internal Supply Source Driver Example

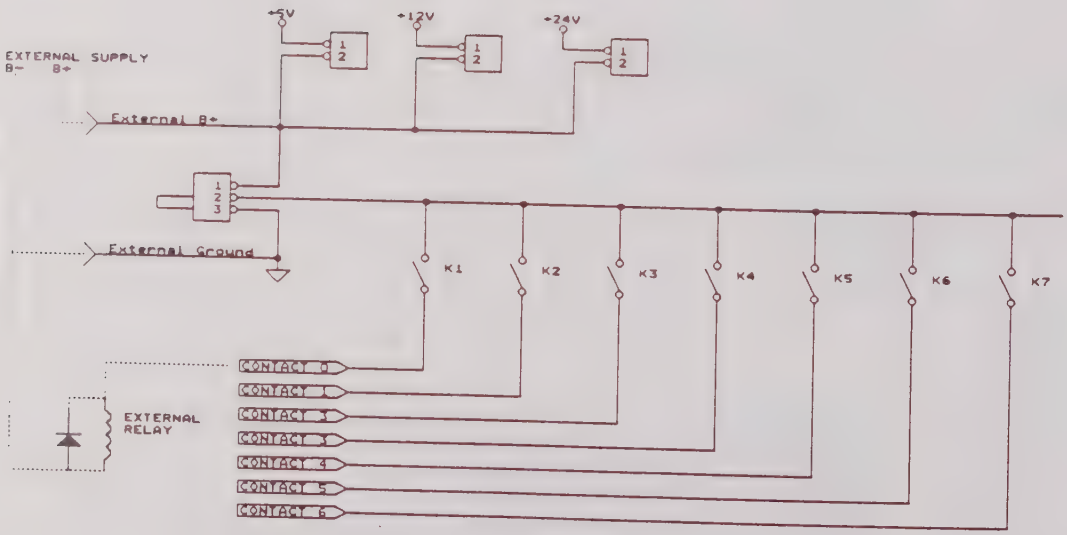

Figure 4-6, External Supply Source Driver Example

5.0 Theory of Operation

5.1 PCB Assemblies

5.1.1 The 1260-64 consists of three PCB Assemblies. The smallest is used only to mount connector J1 to the front panel. The other small PCB Assembly is required to pass the local bus signals, LBUS0 through LBUS11, through the unused second slot of this double-wide module. The VXI IACK and BUS GRANT 0 through 3 signals are jumpered to allow the PCB Assembly to be used in autoconfiguring backplanes.

5.1.2 The main logic PCB Assembly contains DC relay banks, 1260 Local Bus interface circuitry, and drivers for both the relay bank and the RF relays. The VXI interface is described in the Theory of Operation section of the 1260 Series VXI Switching Cards Manual. The relay driver circuitry is contained in monolithic IC driver chips. The relay banks are shown in Figures 4-3 through 4-6. Not shown in these figures are internal clamp diodes. These diodes will clamp minor inductance effects, such as those caused by wiring; but they are not intended to replace suppression diodes across the solenoid coils of external relays, or other inductive loads. Referring to the schematic diagram, the diodes between the Contact lines and ground clamp switch-to-open transients when the bank is used as a source driver. The diodes between the Contact lines and the External B+ clamp switch-to-open transients when the bank is used as a sink driver.

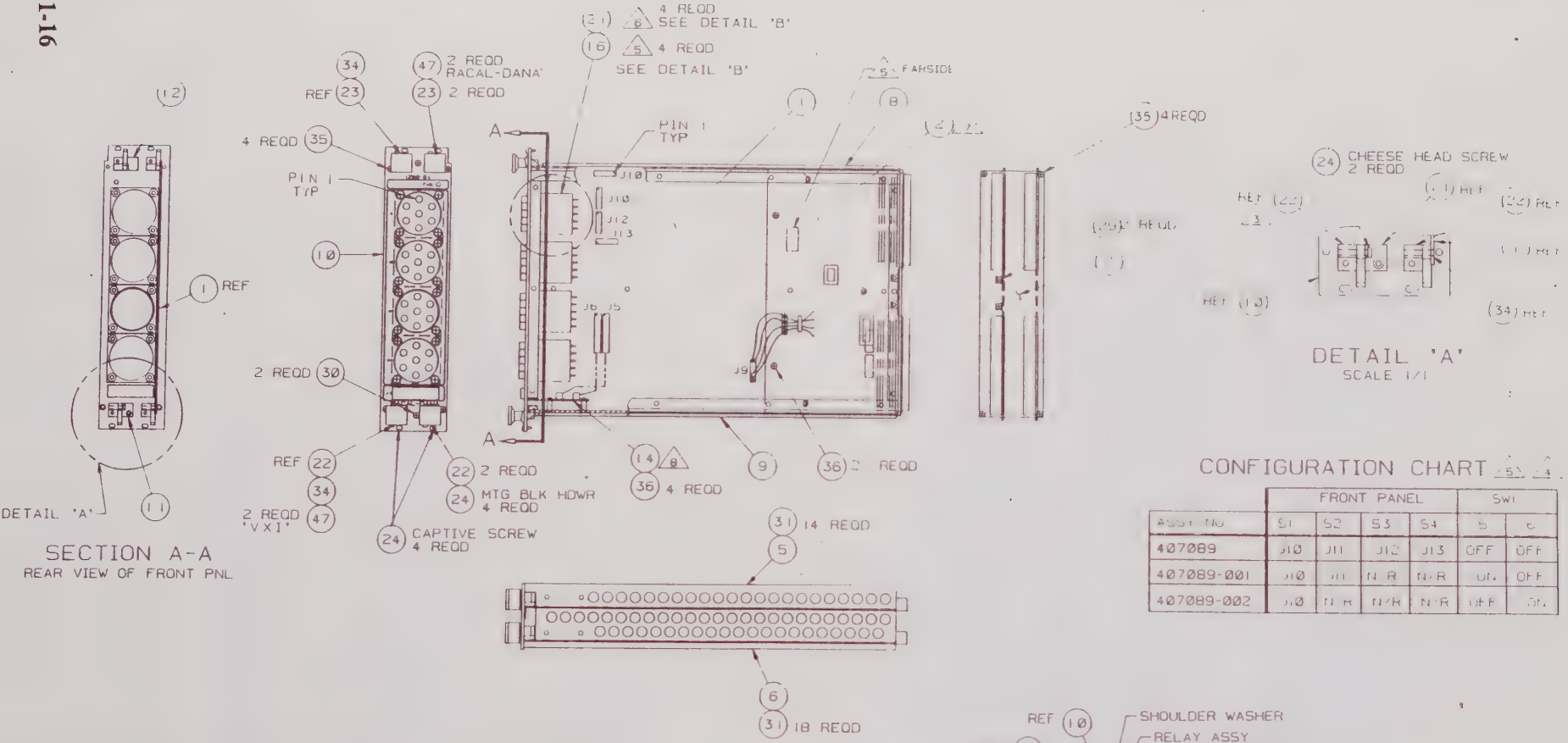

CONFIGURATION CHART ⚠5 ⚠4

	FRONT PANEL				SWI	
ASSY NO	S1	S2	S3	S4	5	6
407089	J10	J11	J12	J13	OFF	OFF
407089-001	J10	J11	N/R	N/R	ON	OFF
407089-002	J10	N/R	N/R	N/R	OFF	ON

10. TO ACCESS 405056 (ITEM 1) REMOVE 455901 (ITEM 5) THEN REMOVE 405055 (ITEM 2) AND 455777-001 (ITEM 7) AS A UNIT BY REMOVING TWO SCREWS (ITEM 36).

⚠9 LOCATE LABELS WHERE SHOWN. SEE DETAIL 'C'

⚠8 INSTALL CABLE FROM 405057-J1 (ITEM 14) TO 405056-J5 (ITEM 1) AND FROM 405057-J2 TO 405056-J6. CABLES INSTALL ORIENTING PIN 1 TO PIN 1.

⚠7 INSTALL CABLE FROM 405055 (ITEM 2) TO J9 ON 405056 (ITEM 1). ORIENT EITHER ORANGE WIRE ON CABLE TO PIN 1 ON J9.

⚠6 INSTALL 611052 (KEY PLUG ITEM 21) INTO CONNECTOR ON 407016 (PART OF ITEM 16) AT POSITION 'B2' (NEXT TO BLACK WIRE). REFERENCE DETAIL 'B'.

⚠5 FOR THE VARIOUS VERSIONS THE RELAY ASSEMBLIES (407016 ITEM 16) AND SWI SWITCH POSITIONS 5 AND 6 (ON 405056 ITEM 1) ARE CONNECTED PER THE CONFIGURATION CHART. WHERE NO RELAY ASSEMBLY IS INDICATED INSTALL 456065 (BLANKING PLATE ITEM 13) USING FOUR (4) 616255 (•6-32 x .312 SCREWS ITEM 37).

⚠4 MARK PART NUMBER FIELD ON 921212-023 (ITEM 43) PER THE CONFIGURATION CHART PRIOR TO AFFIXING LABEL.

⚠3 ITEM 22 CONSISTS OF 1 BOTTOM HANDLE, MOUNTING BLOCK AND ASSOCIATED PARTS. ITEM 23 IS THE SAME (AS ITEM 22) BUT FOR THE TOP.

⚠2 ITEM 24 CONSISTS OF MOUNTING HARDWARE FOR HANDLES AND ASSOCIATED PARTS. DISCARD UNUSED HARDWARE SUPPLIED WITH ITEM 24.

1. INCLUDE SHIPPING KIT (ITEM 49) IN BOX WITH ASSY.

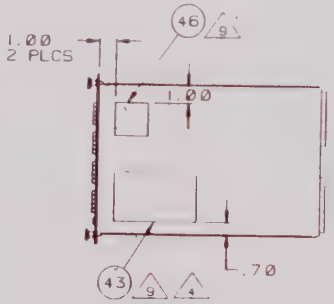

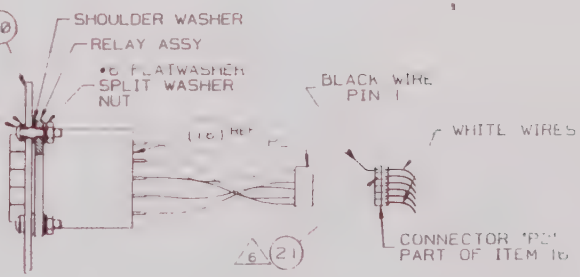

PROPRIETARY NOTICE
THIS DOCUMENT AND THE TECHNICAL DATA HEREON DISCLOSED ARE PROPRIETARY TO RACAL DANA INSTRUMENTS INC AND SHALL NOT WITHOUT EXPRESS WRITTEN PERMISSION OF RACAL DANA INSTRUMENTS INC BE USED RELEASED OR DISCLOSED IN WHOLE OR IN PART OR USED TO SOLICIT QUOTATIONS FROM A COMPETITIVE SOURCE OR USED FOR MANUFACTURE BY ANYONE OTHER THAN RACAL DANA INSTRUMENTS INC THE INFORMATION HEREON HAS BEEN DEVELOPED AT PRIVATE EXPENSE AND MAY ONLY BE USED FOR PURPOSES OF ENGINEERING EVALUATION AND FOR INCORPORATION INTO TECHNICAL SPECIFICATIONS AND OTHER DOCUMENTS WHICH SPECIFY PROCUREMENT OF PRODUCTS FROM RACAL DANA INSTRUMENTS INC

RACAL-DANA Instruments Inc.
4 GOODYEAR, IRVINE, CALIFORNIA 92714

DOCUMENT TITLE
FINAL ASSY
1260-64

SIZE	CODE IDENT NO	DOCUMENT NO	REV
D	21793	407089-001	1

SCALE 1/2 SHEET 1 OF 4

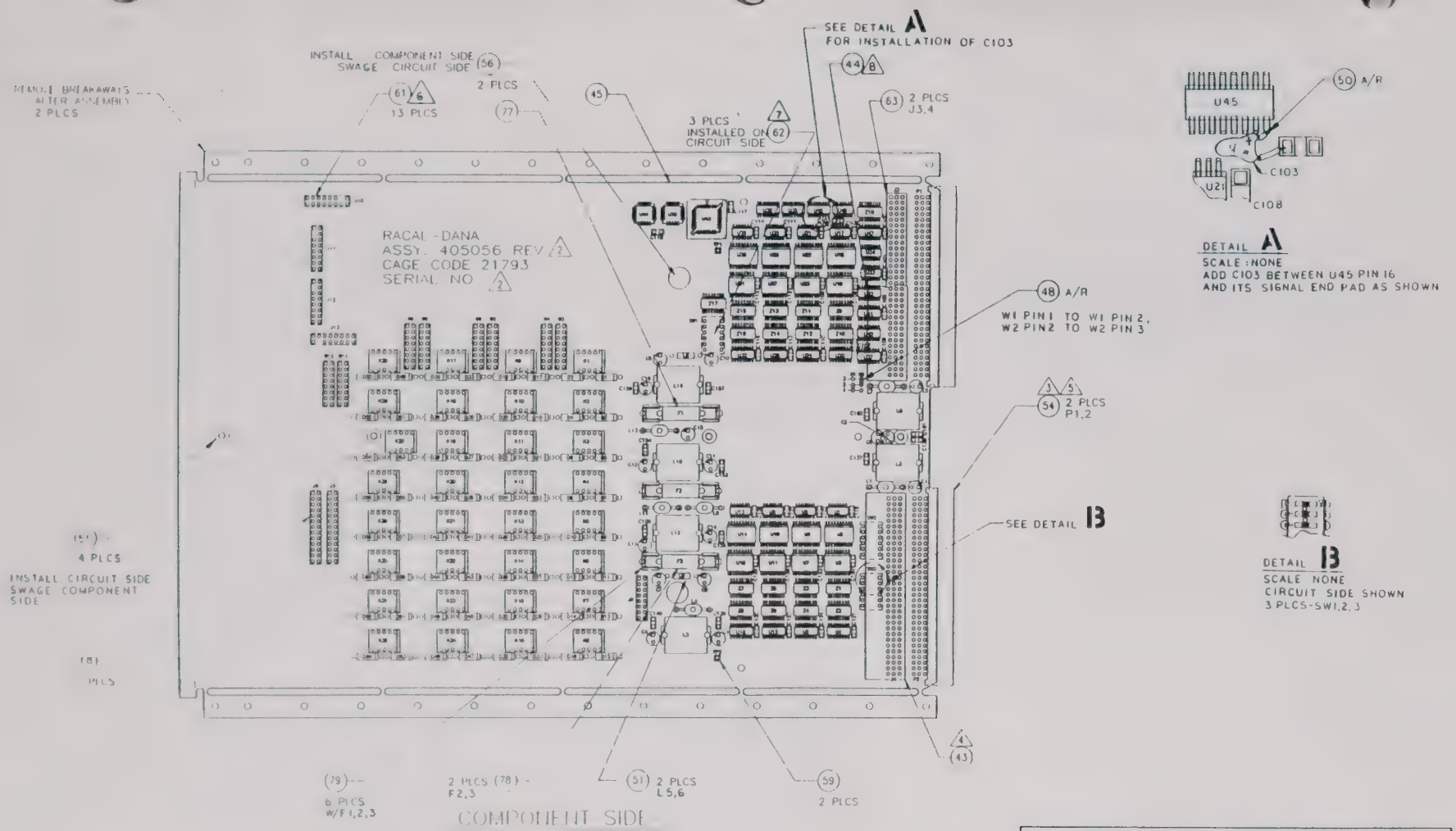

THIS DOCUMENT WAS CREATED AND BACKED UP BY ENGINEERING'S VALID ALLEGRO CAD SYSTEM. ALL REVISIONS ARE TO BE MADE ON THE VALID ALLEGRO SYSTEM IN ACCORDANCE WITH COMPANY POLICY FOR C A D DOCUMENTATION

5 INSTALL (ITEM 44) PCB INTO (ITEM 63) J3
SWITCHES SW1,2 & 3 (ITEM 62) ARE OFF POSITION. DO NOT WAVE SOLDER
6 CUT PIN 3 OF J10,11,12 & 13 FLUSH WITH BODY OF CONNECTOR
7 P1 AND P2 MUST BE INSTALLED FLUSH AT RIGHT ARGLE TO PCB
8 INSTALL (ITEM 43) PCB INTO (ITEM 63) J4
9 SOLDER TABS OF CIRCUIT SIDE OF PCB FOR P1 AND P2 (ITEM 54) TO BE TRIMMED TO A MAXIMUM HEIGHT OF .080
[illegible] AND CURRENT REVISION ON
[illegible] APPROX WHERE SHOWN
[illegible] TO MATCH 405056

PROPRIETARY NOTICE
THIS DOCUMENT AND THE TECHNICAL DATA HEREON DISCLOSED ARE PROPRIETARY TO RACAL DANA INSTRUMENTS INC AND SHALL NOT WITHOUT EXPRESS WRITTEN PERMISSION OF RACAL DANA INSTRUMENTS INC BE USED RELEASED OR DISCLOSED IN WHOLE OR IN PART OR USED TO SOLICIT QUOTATIONS FROM A COMPETITIVE SOURCE OR USED FOR MANUFACTURE BY ANYONE OTHER THAN RACAL DANA INSTRUMENTS INC. THE INFORMATION HEREON HAS BEEN DEVELOPED AT PRIVATE EXPENSE AND MAY ONLY BE USED FOR PURPOSES OF ENGINEERING EVALUATION AND FOR INCORPORATION INTO TECHNICAL SPECIFICATIONS AND OTHER DOCUMENTS WHICH SPECIFY PROCUREMENT OF PRODUCTS FROM RACAL DANA INSTRUMENTS INC

RACAL-DANA Instruments Inc.
4 GOODYEAR, IRVINE CALIFORNIA 92714

DOCUMENT TITLE			
PCB ASSY,1260-64			
SIZE	CODE IDENT NO	DOCUMENT NO	REV
D	21793	405056	1
SCALE		SHEET	OF 2

REF. DES.	IC TYPE	+5V PIN NO	GND PIN NO
U43	231154 (22V10H)	28	14
U42	26LS31	16	8
U40, 41	26LS32	16	8
U37, 39	74HCT253	16	8
U36	231152-001 (16L8Q)	20	10
U48	LM339	3	12
U47	74HCT85	16	8
U45	74LS138	16	8
U44	231153 (16R4)	20	10
U4, 8, 12, 16, 20, 24, 28 U32, 35	74HCT166	16	8
U3, 7, 11, 15, 19, 23, U27, 31	2803	NC	9
U2, 6, 10, 14, 18, 22, U26, 30	74HCT273	20	10
U1, 5, 9, 13, 17, 21, 25, 29 U33, 34	74HCT164	14	7

IC POWER AND GROUND CONNECTIONS

HIGHEST REF DES
Z18
W12
U48
TP2
SW3
P2
L14
K32
J13
F3
D64
C162

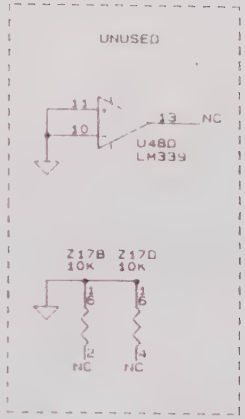

"THIS DOCUMENT WAS CREATED AND BACKED UP ON THE 'ORCAD/SDT III' CAD SYSTEM ALL REVISIONS ARE TO BE MADE ON THE 'ORCAD/SDT III SYSTEM IN ACCORDANCE WITH COMPANY POLICY FOR CAD DOCUMENTATION

PROPRIETARY NOTICE
THIS DOCUMENT AND THE TECHNICAL DATA HEREON DISCLOSED ARE PROPRIETARY TO RACAL DANA INSTRUMENTS INC AND SHALL NOT WITHOUT EXPRESS WRITTEN PERMISSION OF RACAL DANA INSTRUMENTS INC BE USED RELEASED OR DISCLOSED IN WHOLE OR IN PART OR USED TO SOLICIT QUOTATIONS FROM A COMPETITIVE SOURCE OR USED FOR MANUFACTURE BY ANYONE OTHER THAN RACAL DANA INSTRUMENTS INC THE INFORMATION HEREON HAS BEEN DEVELOPED AT PRIVATE EXPENSE AND MAY ONLY BE USED FOR PURPOSES OF ENGINEERING EVALUATION AND FOR INCORPORATION INTO TECHNICAL SPECIFICATIONS AND OTHER DOCUMENTS WHICH SPECIFY PROCUREMENT OF PRODUCTS FROM RACAL DANA INSTRUMENTS INC

RACAL-DANA Instruments Inc.
4 GOODYEAR IRVINE CALIFORNIA 92714

DOCUMENT TITLE
SCHEM, 1260-64

SIZE	CODE IDENT NO	DOCUMENT NO	REV
B	21793	435056	A

SCALE — — — | SHEET 1 OF 14

4. C7 THRU C10 ARE NOT INSTALLED

3. RELAYS K1 THRU K32 ARE RACAL-DANA P/N 310197 ALL RELAYS SHOWN IN DE-ENERGIZED POSITION

2. RESISTOR NETWORKS ARE IN OHMS.

1. CAPACITOR VALUES ARE IN MICROFARADS, 50V, +/-20% UNLESS OTHERWISE SPECIFIED

NOTES: UNLESS OTHERWISE SPECIFIED

SIZE	CODE IDENT NO	DOCUMENT NO	REV
B	21793	439	A
SCALE			SHEET

SIZE	CODE IDENT NO	DOCUMENT NO	REV
B	21793	435056	A
SCALE		SHEET 1 OF 14	

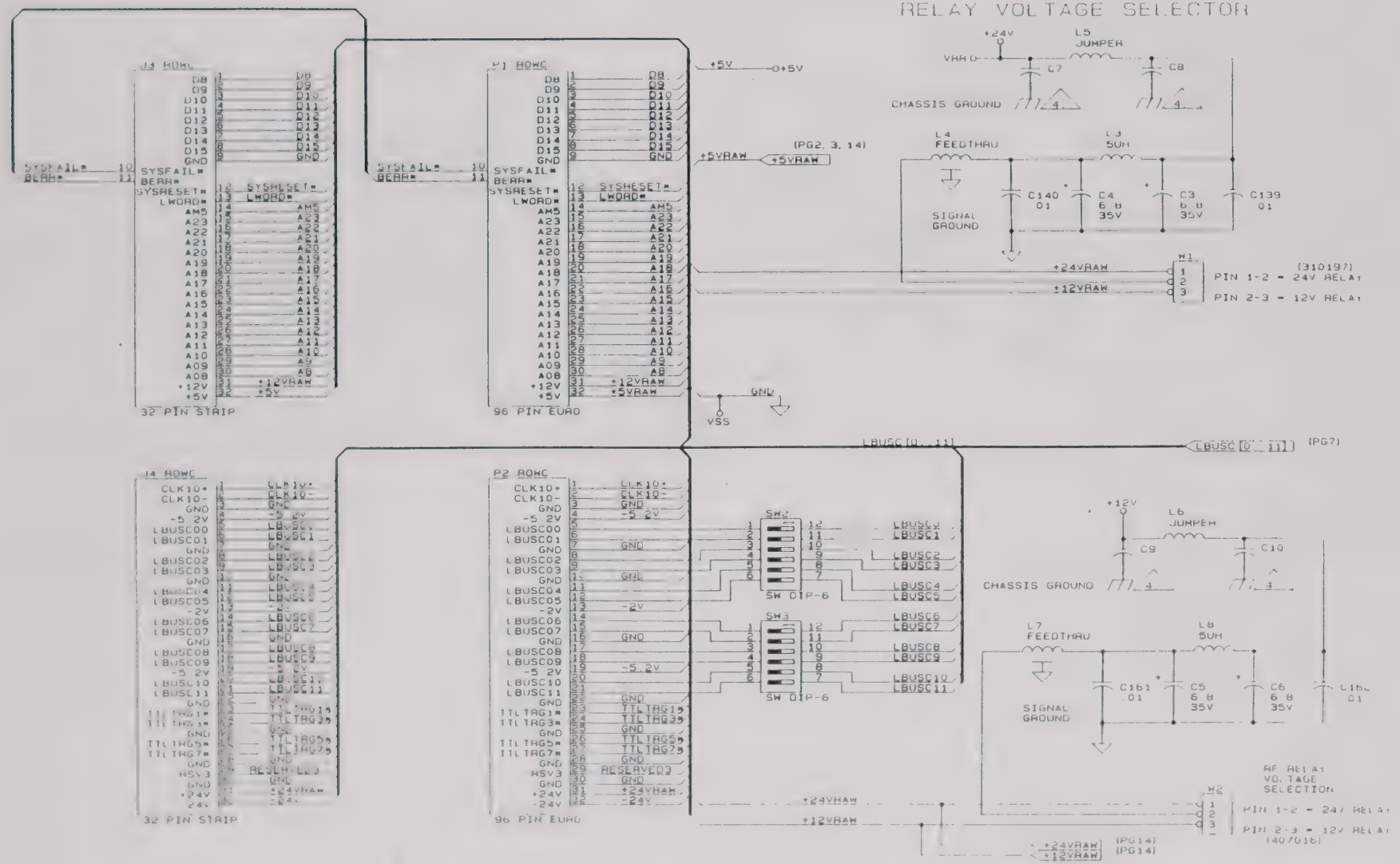

SIZE	CODE IDENT NO	DOCUMENT NO	REV
B	21793		A
SCALE		SHEET	

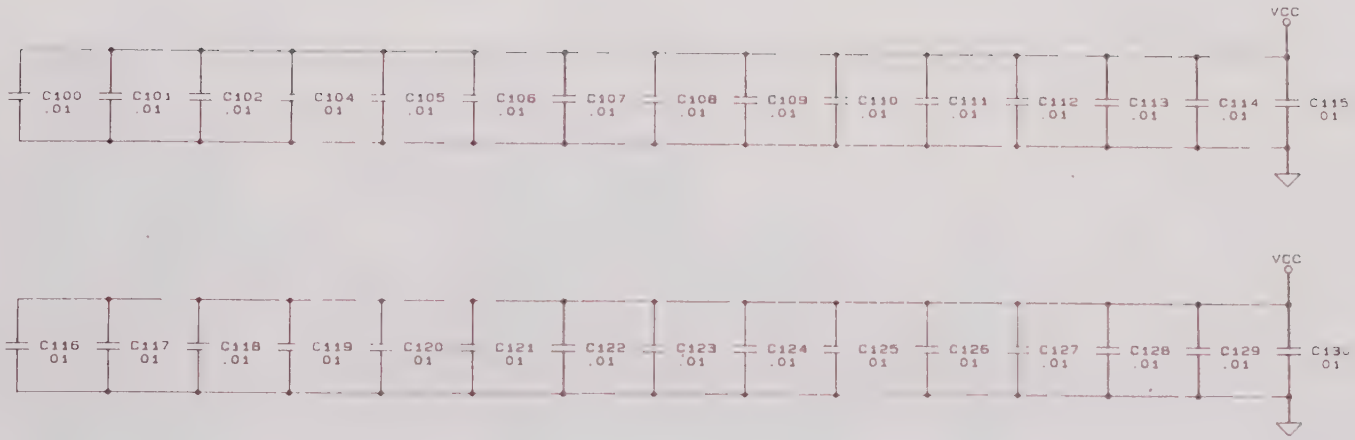

SIZE	CODE IDENT NO	DOCUMENT NO	REV
B	21793	435056	A
SCALE ____		SHEET 5 OF 14	

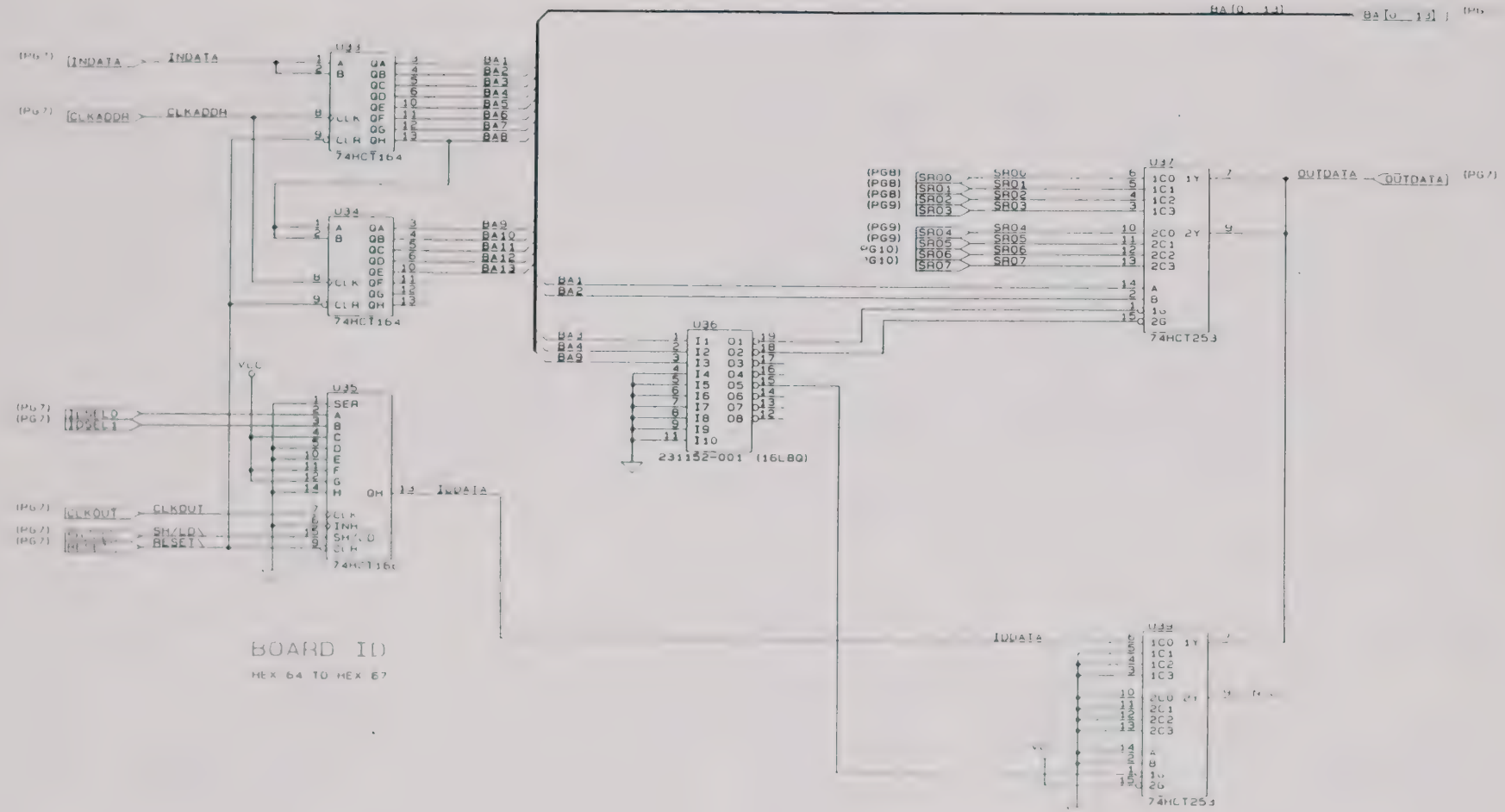

SIZE	CODE IDENT NO	DOCUMENT NO	REV
B	21793		A
SCALE		SHEET	

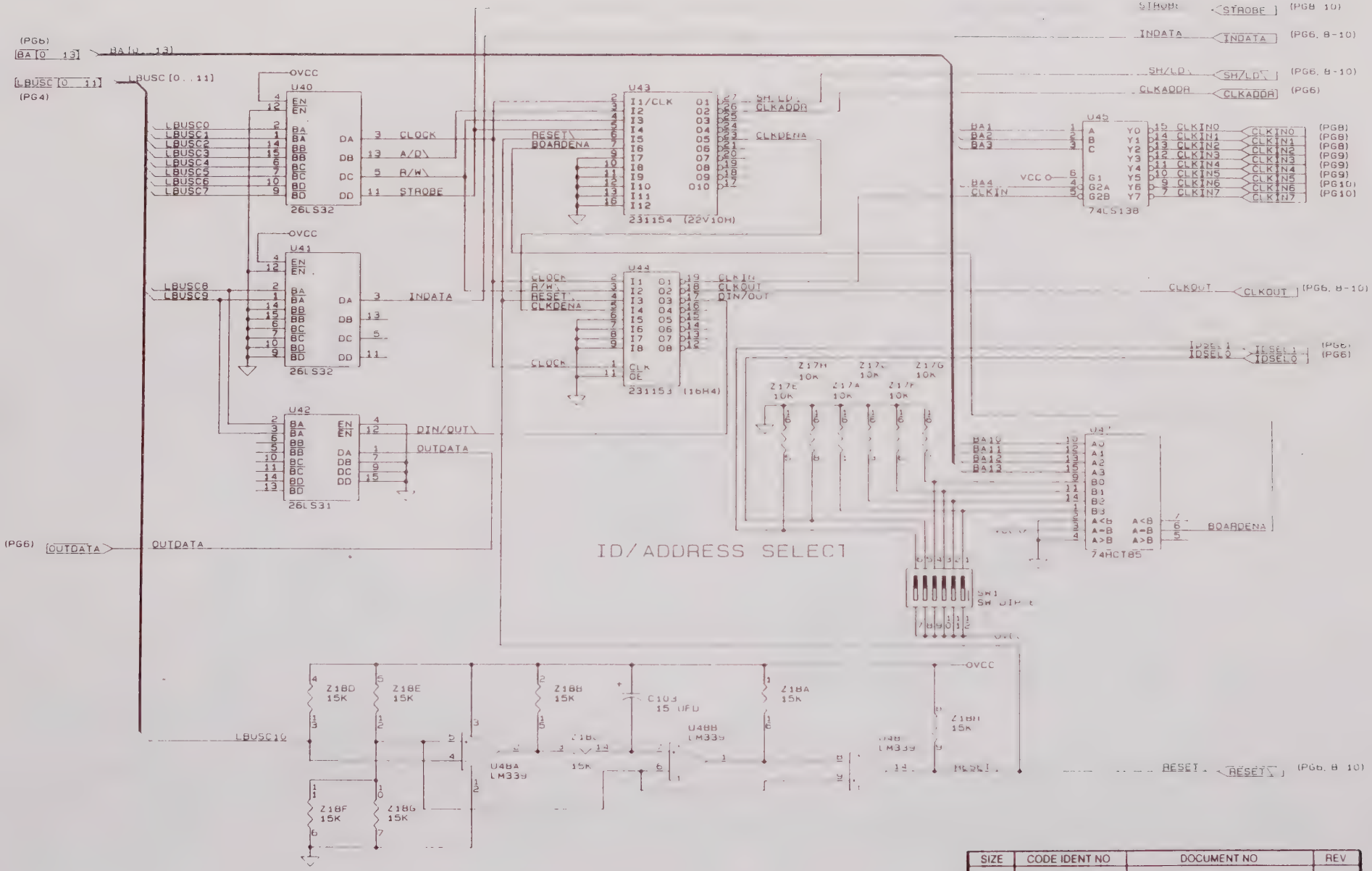

SIZE	CODE IDENT NO	DOCUMENT NO	REV
B	21793	435056	A
SCALE		SHEET 7 OF 14	

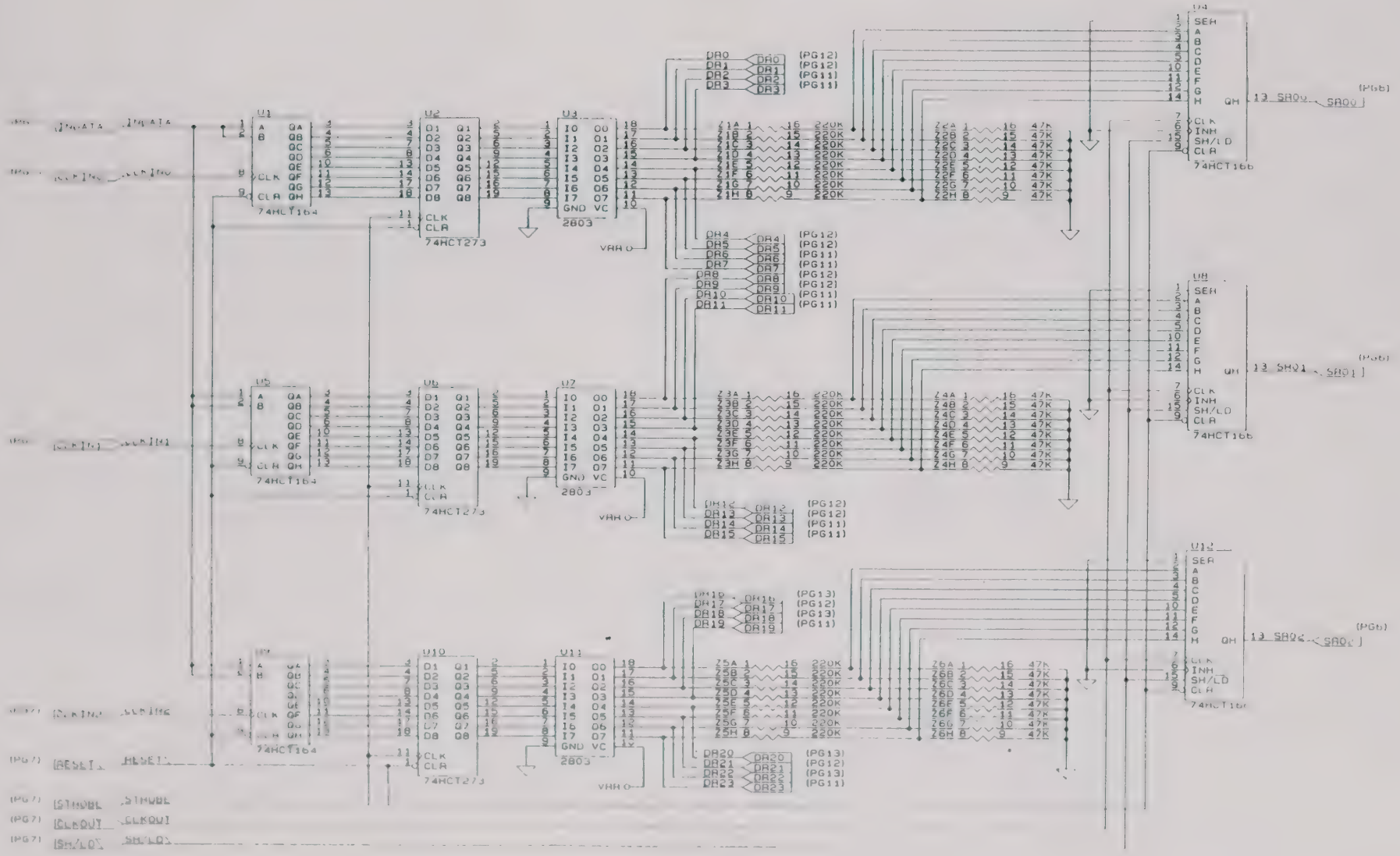

SIZE	CODE IDENT NO	DOCUMENT NO	REV
B	21793		A
SCALE		SHEET	

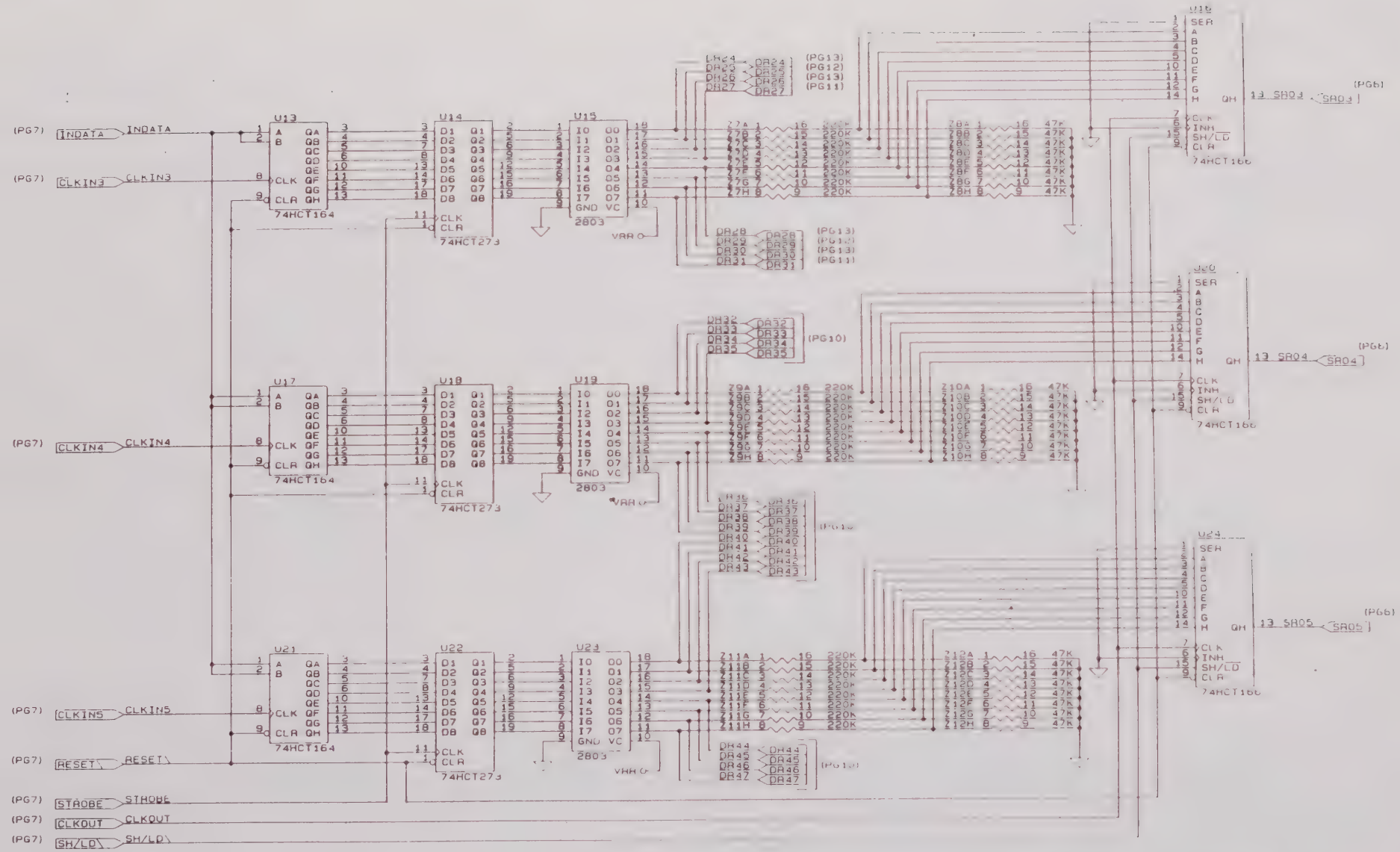

SIZE	CODE IDENT NO	DOCUMENT NO	REV
B	21793	435056	A
SCALE -		SHEET 9 OF 14	

CONNECTORS FOR RF

SIZE	CODE IDENT NO	DOCUMENT NO	REV
B	21793		A
SCALE		SHEET	

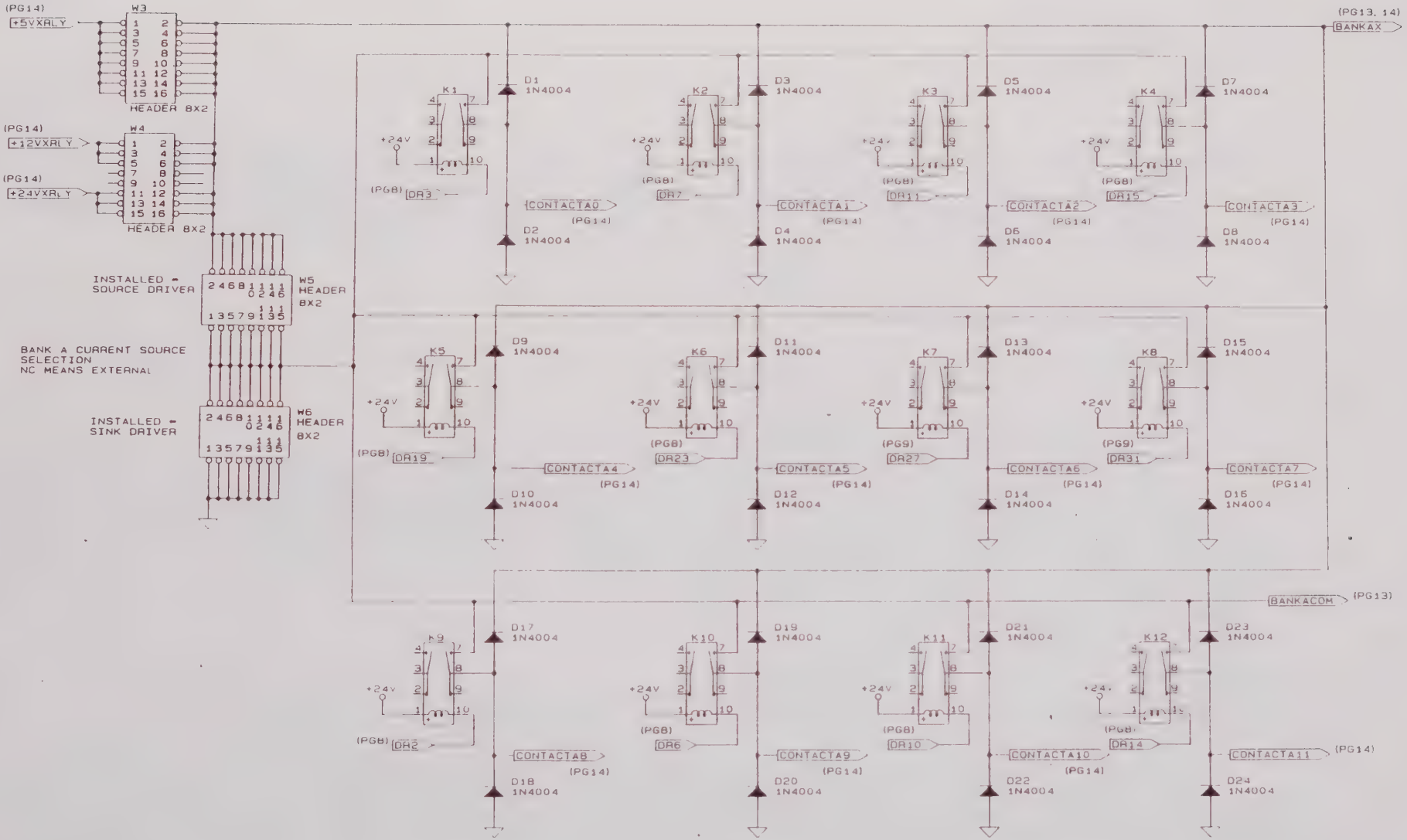

SIZE	CODE IDENT NO	DOCUMENT NO	REV
B	21793	435056	A
SCALE		SHEET 11 OF 14	

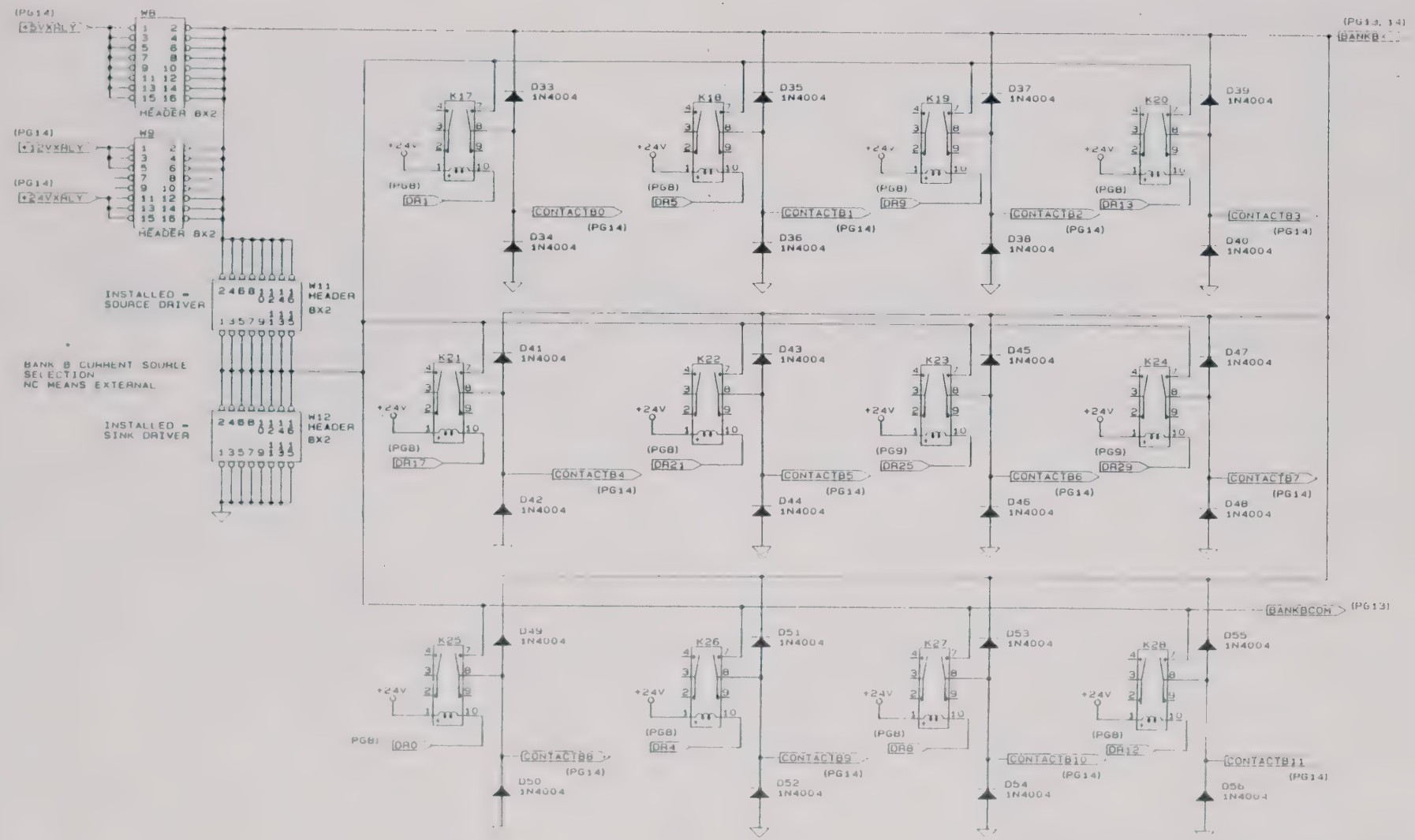

SIZE	CODE IDENT NO	DOCUMENT NO	REV
B	21793		A
SCALE		SHEET	

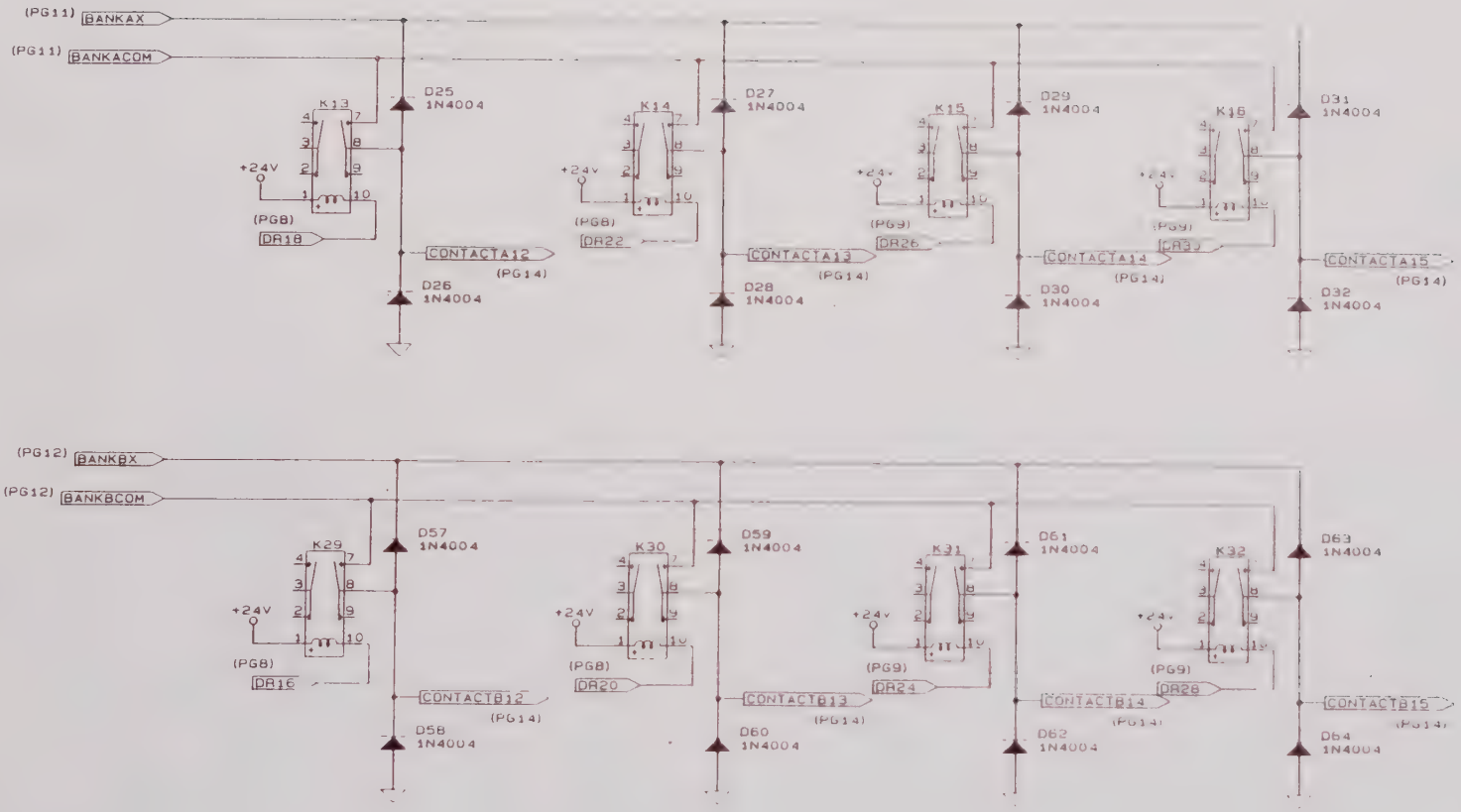

SIZE	CODE IDENT NO	DOCUMENT NO	REV
B	21793	135056	A
SCALE		SHEET 13 OF 14	

TO FRONT PANEL
HIGH-DENSITY
CONNECTOR

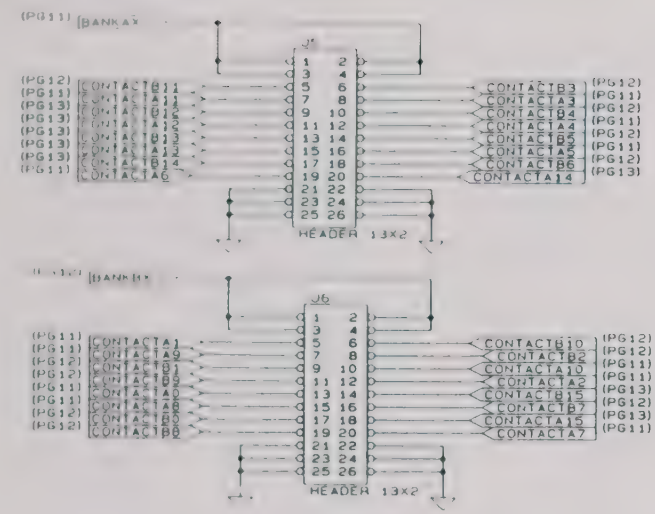

EXTRA POWER
FOR RELAYS
FROM LBUS BYPASS
PCBA

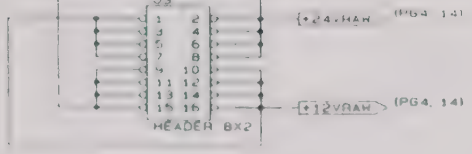

FILTERS FOR POWER GOING
TO DRIVE EXTERNAL RELAYS

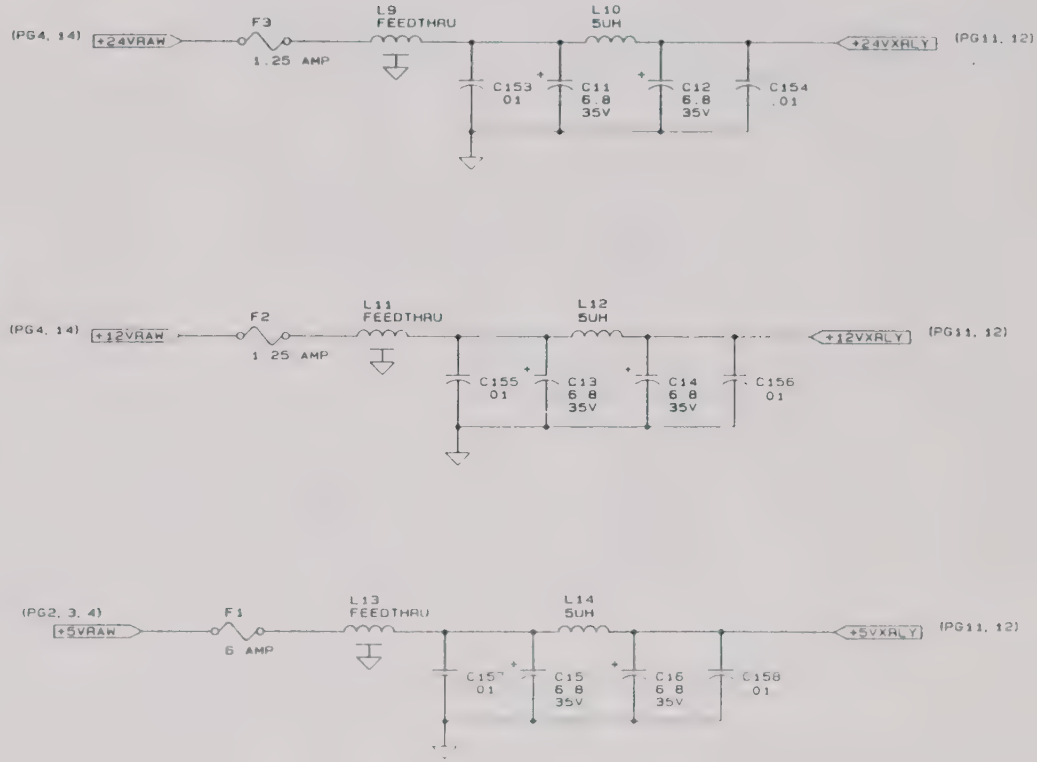

SIZE	CODE IDENT NO	DOCUMENT NO	REV
B	21793		A
SCALE		SHEET 14 OF 14	

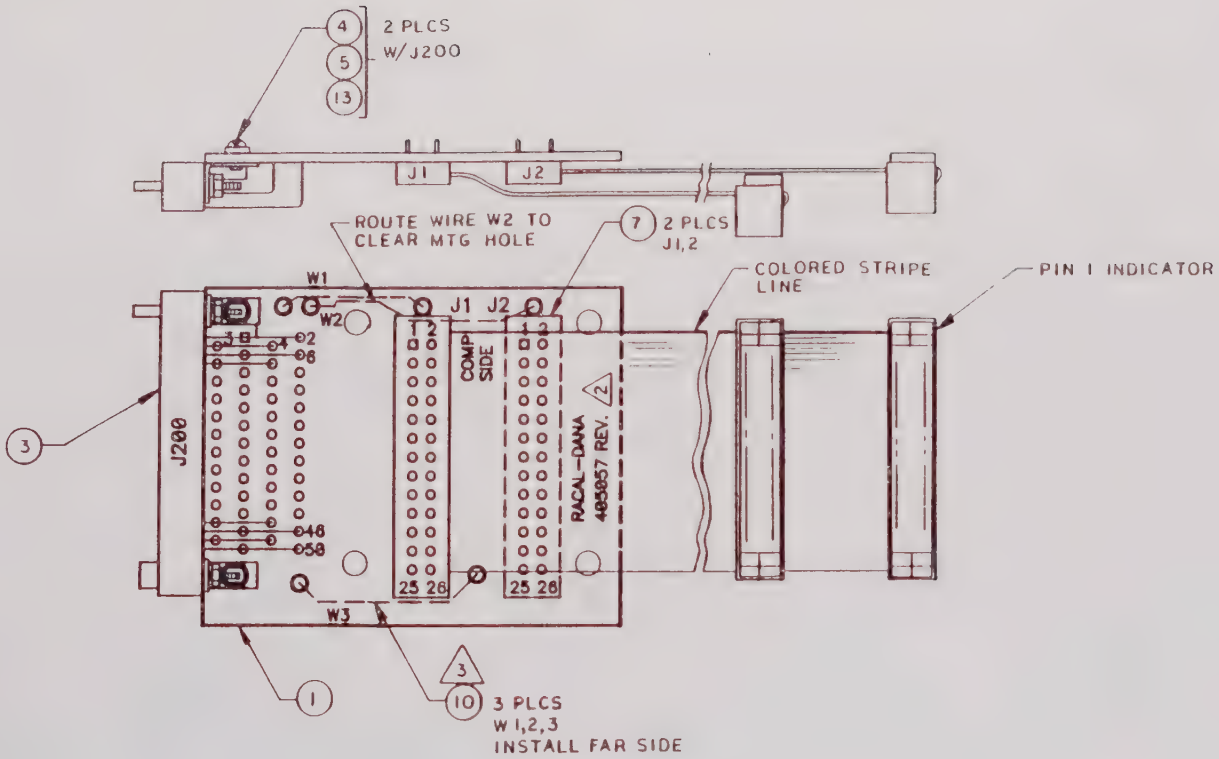

3 INSTALL WIRE (ITEM 10) TO W1,2 & 3 ON CIRCUIT SIDE AS SHOWN.

2 INK STAMP CURRENT REVISION ON COMPONENT SIDE APPROX. WHERE SHOWN.

1. REFERENCE SCHEMATIC 435057.

PROPRIETARY NOTICE
THIS DOCUMENT AND THE TECHNICAL DATA HEREON DISCLOSED ARE PROPRIETARY TO RACAL DANA INSTRUMENTS INC AND SHALL NOT WITHOUT EXPRESS WRITTEN PERMISSION OF RACAL DANA INSTRUMENTS INC BE USED RELEASED OR DISCLOSED IN WHOLE OR IN PART OR USED TO SOLICIT QUOTATIONS FROM A COMPETITIVE SOURCE OR USED FOR MANUFACTURE BY ANYONE OTHER THAN RACAL DANA INSTRUMENTS INC THE INFORMATION HEREON HAS BEEN DEVELOPED AT PRIVATE EXPENSE AND MAY ONLY BE USED FOR PURPOSES OF ENGINEERING EVALUATION AND FOR INCORPORATION INTO TECHNICAL SPECIFICATIONS AND OTHER DOCUMENTS WHICH SPECIFY PROCUREMENT OF PRODUCTS FROM RACAL DANA INSTRUMENTS INC

RACAL-DANA Instruments Inc.
4 GOODYEAR, IRVINE, CALIFORNIA 92714

DOCUMENT TITLE
PCB ASSY,
CONN INTFC,1260-64

SIZE	CODE IDENT NO	DOCUMENT NO	REV
C	21793	405057	A

SCALE 2:1 | SHEET 1 OF 2

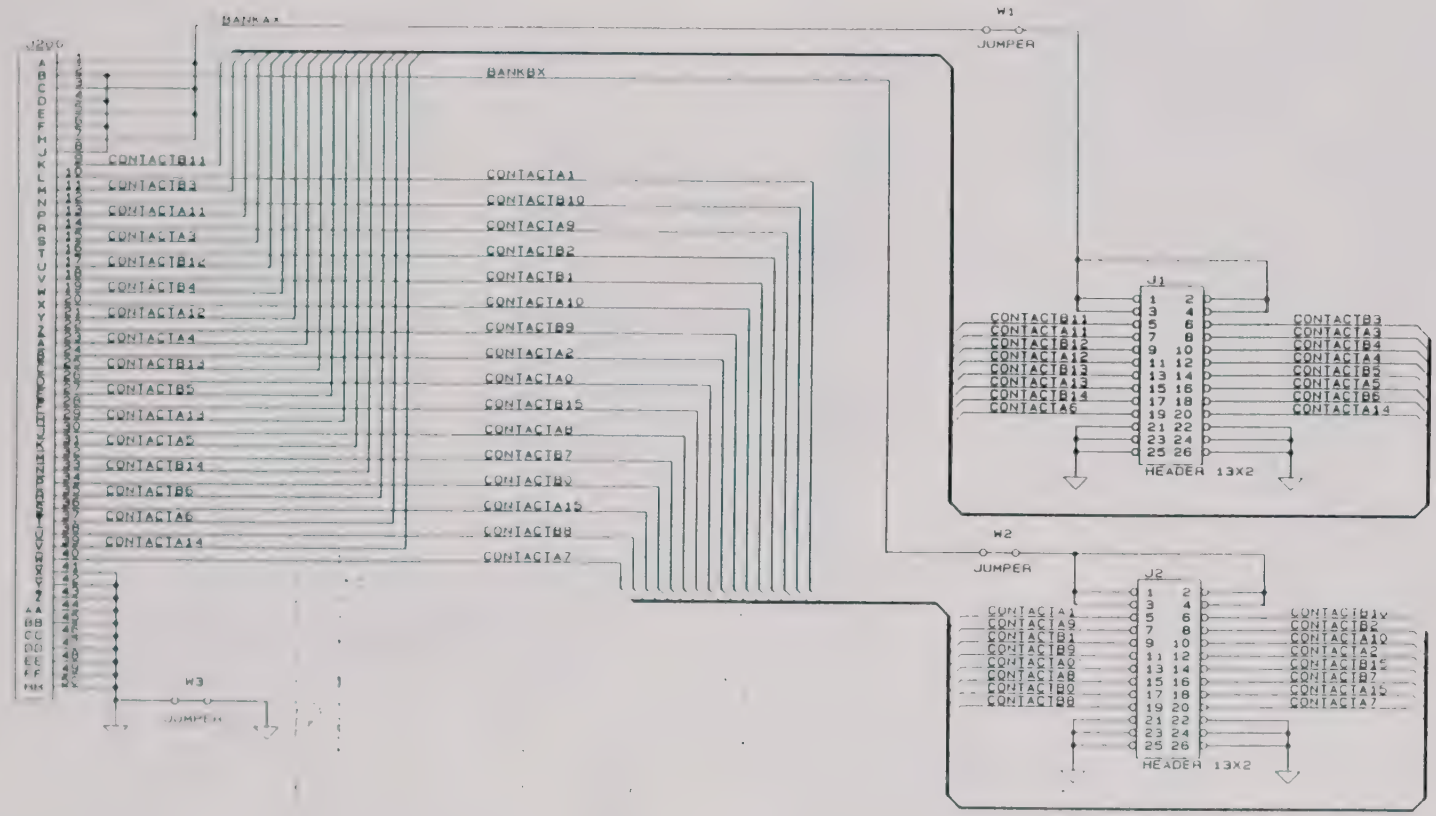

"THIS DOCUMENT WAS CREATED AND BACKED UP ON THE 'ORCAD/SDT III' CAD SYSTEM. ALL REVISIONS ARE TO BE MADE ON THE 'ORCAD/SDT III' SYSTEM IN ACCORDANCE WITH COMPANY POLICY FOR CAD DOCUMENTATION"

PROPRIETARY NOTICE

THIS DOCUMENT AND THE TECHNICAL DATA HEREON DISCLOSED ARE PROPRIETARY TO RACAL DANA INSTRUMENTS INC AND SHALL NOT WITHOUT EXPRESS WRITTEN PERMISSION OF RACAL DANA INSTRUMENTS INC BE USED RELEASED OR DISCLOSED IN WHOLE OR IN PART OR USED TO SOLICIT QUOTATIONS FROM A COMPETITIVE SOURCE OR USED FOR MANUFACTURE BY ANYONE OTHER THAN RACAL DANA INSTRUMENTS INC THE INFORMATION HEREON HAS BEEN DEVELOPED AT PRIVATE EXPENSE AND MAY ONLY BE USED FOR PURPOSES OF ENGINEERING EVALUATION AND FOR INCORPORATION INTO TECHNICAL SPECIFICATIONS AND OTHER DOCUMENTS WHICH SPECIFY PROCUREMENT OF PRODUCTS FROM RACAL DANA INSTRUMENTS INC

RACAL-DANA Instruments Inc.
4 GOODYEAR IRVINE CALIFORNIA 92714

DOCUMENT TITLE			
SCHEM, CONN [illegible]			
SIZE	CODE IDENT NO	DOCUMENT NO	REV
B	21793	[illegible]	A
SCALE		SHEET [illegible]	

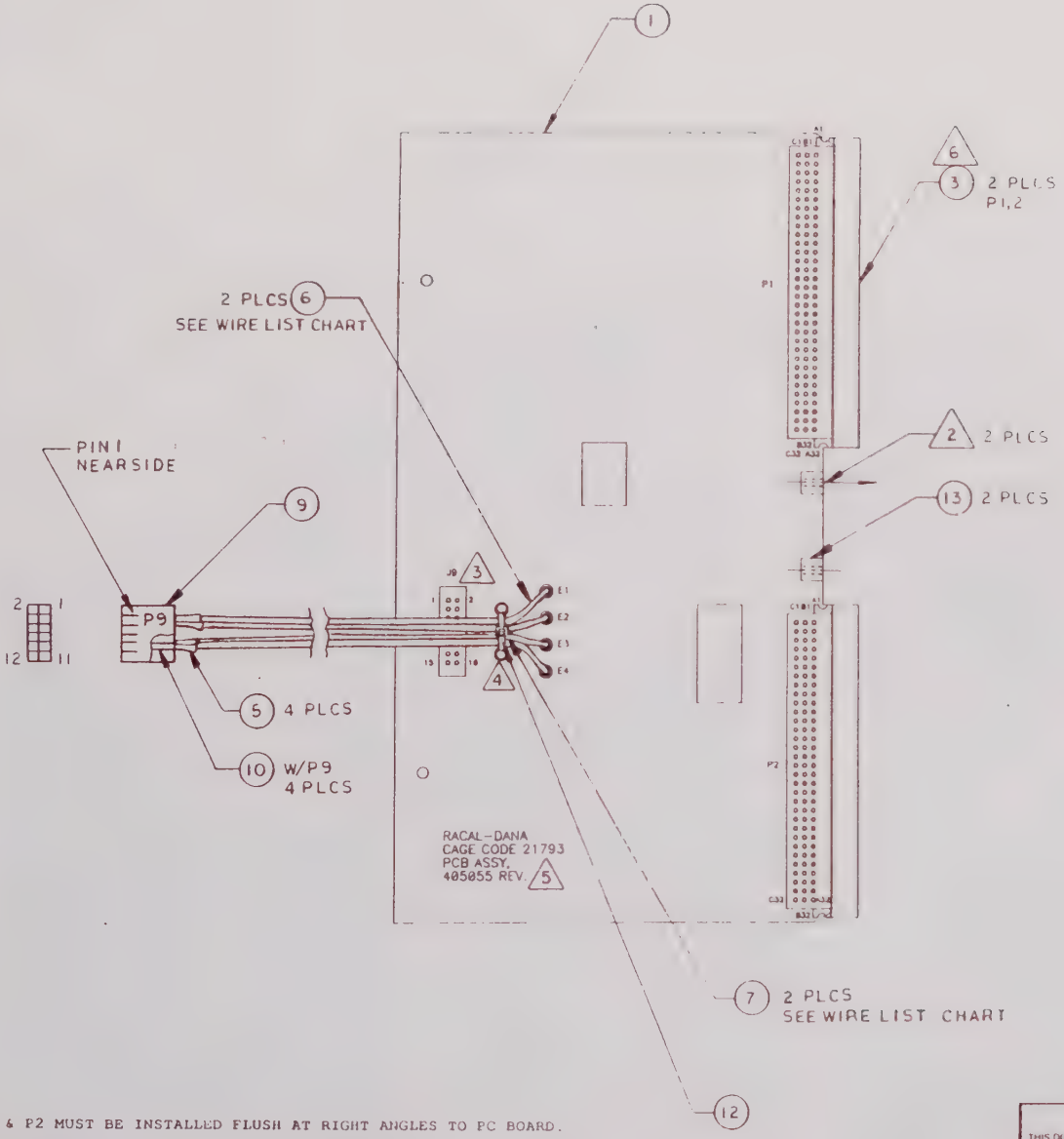

WIRE LIST CHART

FROM	TO	DESCRIPTION	WIRE LENGTH	REF
P9-1	E1	WIRE, TEF, STRND, 22G ORANGE, 523333 (ITEM 6)	5.50±.50	+12V
P9-2	E2	WIRE, TEF STRND, 22G GRAY, 523888 (ITEM 7)	5.50±.50	+24V
P9-11	E3	WIRE, TEF, STRND, 22G GRAY, 523888 (ITEM 7)	"	+24V
P9-12	E4	WIRE, TEF, STRND, 22G ORANGE, 523333 (ITEM 6)	"	+12V

6. P1 & P2 MUST BE INSTALLED FLUSH AT RIGHT ANGLES TO PC BOARD.
5. INK STAMP CURRENT REV. ON COMPONENT SIDE APPROX. WHERE SHOWN.
4. THESE HOLES ARE PROVIDED FOR SECURING CABLE TIE (ITEM 12).
3. J9 IS NOT INSTALLED.
2. THREADED HOLE MUST FACE THIS DIRECTION AFTER INSTALLATION.
1. REFERENCE SCHEMATIC 435055.

PROPRIETARY NOTICE
THIS DOCUMENT AND THE TECHNICAL DATA HEREON DISCLOSED ARE PROPRIETARY TO RACAL DANA INSTRUMENTS INC AND SHALL NOT WITHOUT EXPRESS WRITTEN PERMISSION OF RACAL DANA INSTRUMENTS INC BE USED, RELEASED OR DISCLOSED IN WHOLE OR IN PART OR USED TO SOLICIT QUOTATIONS FROM A COMPETITIVE SOURCE OR USED FOR MANUFACTURE BY ANYONE OTHER THAN RACAL DANA INSTRUMENTS INC. THE INFORMATION HEREON HAS BEEN DEVELOPED AT PRIVATE EXPENSE AND MAY ONLY BE USED FOR PURPOSES OF ENGINEERING EVALUATION AND FOR INCORPORATION INTO TECHNICAL SPECIFICATIONS AND OTHER DOCUMENTS WHICH SPECIFY PROCUREMENT OF PRODUCTS FROM RACAL DANA INSTRUMENTS INC.

RACAL-DANA Instruments Inc.
4 GOODYEAR, IRVINE, CALIFORNIA 92714

DOCUMENT TITLE
PCB ASSY, L-BUS BYPASS, 1260

SIZE	CODE IDENT NO	DOCUMENT NO	REV
D	21793	405055	A

SCALE 1:1 | SHEET 1 OF 2

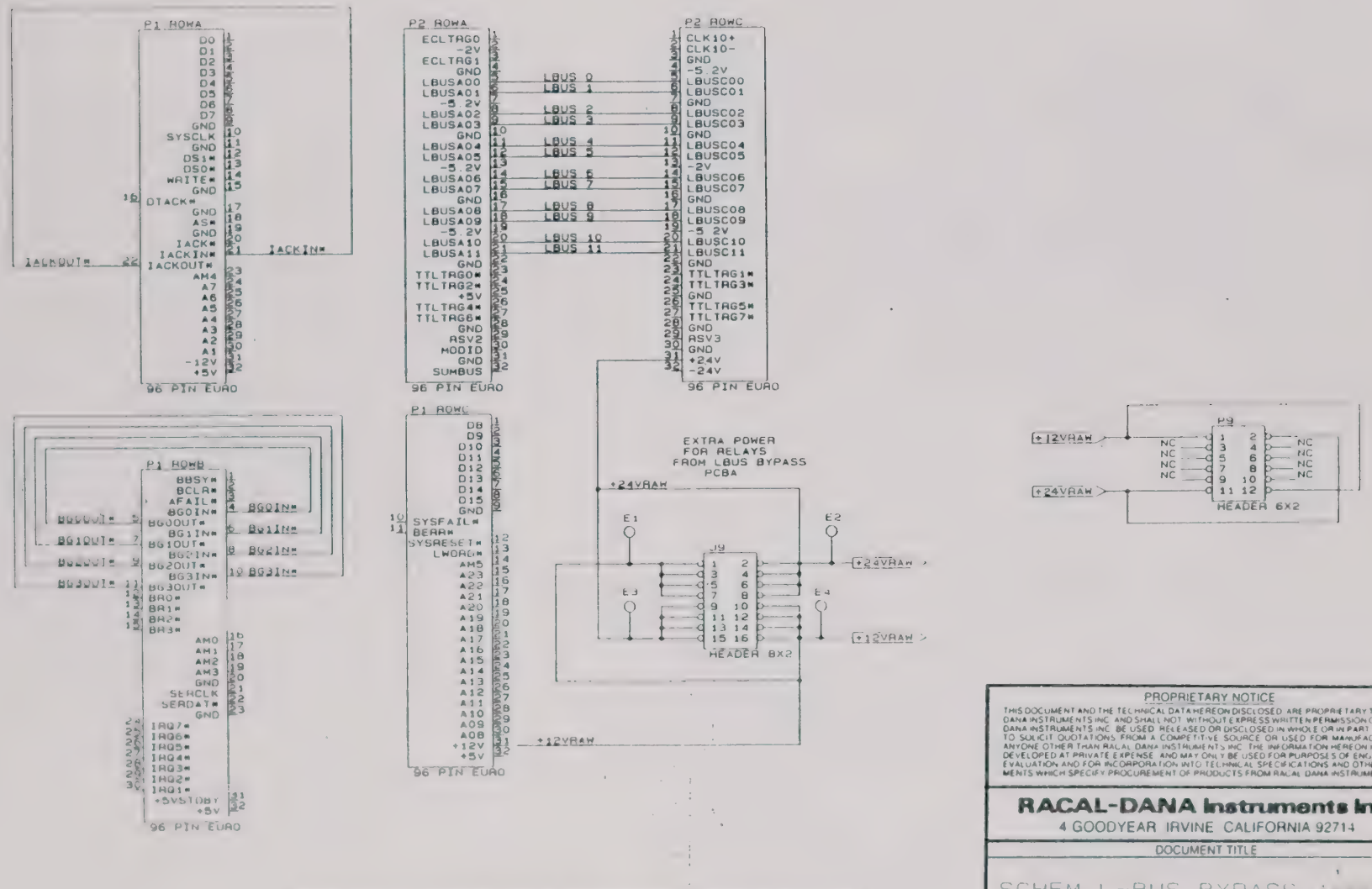

THIS DOCUMENT WAS CREATED AND BACKED UP ON THE 'ORCAD/SDT III' CAE SYSTEM. ALL REVISIONS ARE TO BE MADE ON THE 'ORCAD/SDT III' SYSTEM IN ACCORDANCE WITH COMPANY POLICY FOR CAD DOCUMENTATION.

PROPRIETARY NOTICE

THIS DOCUMENT AND THE TECHNICAL DATA HEREON DISCLOSED ARE PROPRIETARY TO RACAL DANA INSTRUMENTS INC AND SHALL NOT WITHOUT EXPRESS WRITTEN PERMISSION OF RACAL DANA INSTRUMENTS INC BE USED RELEASED OR DISCLOSED IN WHOLE OR IN PART OR USED TO SOLICIT QUOTATIONS FROM A COMPETITIVE SOURCE OR USED FOR MANUFACTURE BY ANYONE OTHER THAN RACAL DANA INSTRUMENTS INC. THE INFORMATION HEREON HAS BEEN DEVELOPED AT PRIVATE EXPENSE AND MAY ONLY BE USED FOR PURPOSES OF ENGINEERING EVALUATION AND FOR INCORPORATION INTO TECHNICAL SPECIFICATIONS AND OTHER DOCUMENTS WHICH SPECIFY PROCUREMENT OF PRODUCTS FROM RACAL DANA INSTRUMENTS INC.

RACAL-DANA Instruments Inc.
4 GOODYEAR IRVINE CALIFORNIA 92714

DOCUMENT TITLE

SCHEM, L-BUS BYPASS, [illegible]

SIZE	CODE IDENT NO	DOCUMENT NO	REV
B	21793	435055	A

SCALE | SHEET [illegible] OF [illegible]

407089 FINAL ASSY., 1260-64

REF DESIG	RACAL-DANA P/N	DESCRIPTION	FSC	MANUFACTURER'S P/N
{1}1	405056	PCB ASSY., 1260-64	21793	405056
{2}1	405055	PCB ASSY., L-BUS BYPASS	21793	405055
{5}1	455901	PANEL, RIGHT SIDE	21793	455901
{6}1	455779-003	PANEL, SIDE, LEFT	21793	455779-003
{7}1	455777-001	PANEL, REAR, DOUBLE	21793	455777-001
{8}1	455818-001	PANEL, TOP, 2X	21793	455818-001
{9}1	455819-001	PANEL, BOTTOM, 2X	21793	455819-001
{10}1	456042	FRONT PANEL, 1260-64	21793	456042
{11}1	456056-001	BRACKET, HANDLE SUPPORT, BOTTOM	21793	456056-001
{12}1	456056-002	BRACKET, HANDLE SUPPORT, TOP	21793	456056-002
{14}1	405057	PCB ASSY., CONNECTOR INTERFACE	21793	405057
{16}4	407016	RELAY ASSY., SP6T, 18 GHZ	21793	407016
{21}4	611052	KEY, POLARIZING, PLUG	00779	87077-1
{22}2	611264	HANDLE, EXTRACTOR, BOTTOM	62559	20817-327
{23}2	611265	HANDLE, EXTRACTOR, TOP	62559	20817-328
{24}1	611266	MOUNTING HARDWARE, HANDLE	62559	21100-745
{25}16	611620	WASHER, FIBER FLAT, #6	83330	2160
{29}2	615292	SCREW, PFL, 4-40 X .312	-	-
{30}2	615514	SCREW, PFH, 2-56 X .312	-	-
{31}32	615539	SCREW, PFH, 4-40X. 125	-	-
{34}2	616405	SCREW, PFH, M2.5-.45 X 12	-	-
{35}8	616480	SCREW, PFH, 4-40 X .375	-	-
{36}6	616251	SCREW, PPH, SEMS ASSY, 4-40X.250	78189	-
{43}1	921212-023	LABEL, VXI, 1260-64	21793	921212-023
{44}A/R	920962	LOCTITE, 242, MED STR.	05972	272
{46}1	921059	LABEL, CAUTION, STATIC	21793	921059
{47}2	921148	LABEL SET, VXI-VME	21793	921148
{49}1	407090	SHIPPING KIT, 1260-64	21793	407090

407089-001 FINAL ASSY., 1260-64B

REF DESIG	RACAL-DANA P/N	DESCRIPTION	FSC	MANUFACTURER'S P/N
{1}1	405056	PCB ASSY., 1260-64	21793	405056
{2}1	405055	PCB ASSY., L-BUS BYPASS	21793	405055
{5}1	455901	PANEL, RIGHT SIDE	21793	455901
{6}1	455779-003	PANEL, SIDE, LEFT	21793	455779-003
{7}1	455777-001	PANEL, REAR, DOUBLE	21793	455777-001
{8}1	455818-001	PANEL, TOP, 2X	21793	455818-001
{9}1	455819-001	PANEL, BOTTOM, 2X	21793	455819-001
{10}1	456042	FRONT PANEL, 1260-64	21793	456042
{11}1	456056-001	BRACKET, HANDLE SUPPORT, BOTTOM	21793	456056-001
{12}1	456056-002	BRACKET, HANDLE SUPPORT, TOP	21793	456056-002
{13}2	456065	PLATE, BLANKING, 1260-64	21793	456065
{14}1	405057	PCB ASSY., CONNECTOR INTERFACE	21793	405057
{16}1	407016	RELAY ASSY., SP6T, 18 GHZ	21793	407016
{21}2	611052	KEY, POLARIZING, PLUG	00779	87077-1
{22}2	611264	HANDLE, EXTRACTOR, BOTTOM	62559	20817-327
{23}2	611265	HANDLE, EXTRACTOR, TOP	62559	20817-328
{24}1	611266	MOUNTING HARDWARE, HANDLE	62559	21100-745
{25}8	611620	WASHER, FIBER FLAT, #6	83330	2160
{29}2	615292	SCREW, PFL, 4-40 X .312	-	-
{30}2	615514	SCREW, PFH, 2-56 X .312	-	-
{31}32	615539	SCREW, PFH, 4-40X. 125	-	-
{34}2	616405	SCREW, PFH, M2.5-.45 X 12	-	-
{35}8	616480	SCREW, PFH, 4-40 X .375	-	-
{36}6	616251	SCREW, PPH, SEMS ASSY, 4-40X.250	78189	-
{37}8	616255	SCREW, PPH, SEMS ASSY, 6-32X.312	78189	-
{43}1	921212-023	LABEL, VXI, 1260-64	21793	921212-023
{44}A/R	920962	LOCTITE, 242, MED STR.	05972	272
{46}1	921059	LABEL, CAUTION, STATIC	21793	921059
{47}2	921148	LABEL SET, VXI-VME	21793	921148
{49}1	407090	SHIPPING KIT, 1260-64	21793	407090

407089-002 FINAL ASSY, 1260-64C

REF DESIG	RACAL-DANA P/N	DESCRIPTION	FSC	MANUFACTURER'S P/N
{1}1	405056	PCB ASSY., 1260-64	21793	405056
{2}1	405055	PCB ASSY., L-BUS BYPASS	21793	405055
{5}1	455901	PANEL, RIGHT SIDE	21793	455901
{6}1	455779-003	PANEL, SIDE, LEFT	21793	455779-003
{7}1	455777-001	PANEL, REAR, DOUBLE	21793	455777-001
{8}1	455818-001	PANEL, TOP, 2X	21793	455818-001
{9}1	455819-001	PANEL, BOTTOM, 2X	21793	455819-001
{10}1	456042	FRONT PANEL, 1260-64	21793	456042
{11}1	456056-001	BRACKET, HANDLE SUPPORT, BOTTOM	21793	456056-001
{12}1	456056-002	BRACKET, HANDLE SUPPORT, TOP	21793	456056-002
{13}3	456065	PLATE, BLANKING, 1260-64	21793	456065
{14}1	405057	PCB ASSY., CONNECTOR INTERFACE	21793	405057
{15}1	407016	RELAY ASSY., SP6T, 18 GHZ	21793	407016
{21}1	611052	KEY, POLARIZING, PLUG	00779	87077-1
{22}2	611264	HANDLE, EXTRACTOR, BOTTOM	62559	20817-327
{23}2	611265	HANDLE, EXTRACTOR, TOP	62559	20817-328
{24}1	611266	MOUNTING HARDWARE, HANDLE	62559	21100-745
{25}4	611620	WASHER, FIBER FLAT, #6	83330	2160
{29}2	615292	SCREW, PFL, 4-40 X .312	-	-
{30}2	615514	SCREW, PFH, 2-56 X .312	-	-
{31}32	615539	SCREW, PFH, 4-40X. 125	-	-
{34}2	616405	SCREW, PFH, M2.5-.45 X 12	-	-
{35}8	616480	SCREW, PFH, 4-40 X .375	-	-
{36}6	616251	SCREW, PPH, SEMS ASSY, 4-40X.250	78189	-
{37}12	616255	SCREW, PPH, SEMS ASSY, 6-32X.312	78189	-
{43}1	921212-023	LABEL, VXI, 1260-64	21793	921212-023
{44}A/R	920962	LOCTITE, 242, MED STR.	05972	272
{46}1	921059	LABEL, CAUTION, STATIC	21793	921059
{47}2	921148	LABEL SET, VXI-VME	21793	921148
{49}1	407090	SHIPPING KIT, 1260-64	21793	407090

405056 PCB ASSY., 1260-64

REF DESIG	RACAL-DANA P/N	DESCRIPTION	FSC	MANUFACTURER'S P/N
C1-C16	110126	CAP, TANTA, 6.8UF, 35V, 20 PERCENT	05397	T355F685M035A5
C100-C102	R-21-1801	CAP, CHIP, 10 NF	95275	VJ1206Y103MF
C103	110165	CAP, TANTA, .15 MF, 35V, 10PCT	05397	T355A154K035AS
C104-C130	R-21-1801	CAP, CHIP, 10 NF	95275	VJ1206Y103MF
C137-C140	R-21-1801	CAP, CHIP, 10 NF	95275	VJ1206Y103MF
C153-C158	R-21-1801	CAP, CHIP, 10 NF	95275	VJ1206Y103MF
C161	R-21-1801	CAP, CHIP, 10 NF	95275	VJ1206Y103MF
C162	R-21-1801	CAP, CHIP, 10 NF	95275	VJ1206Y103MF
D1-D64	210004	DIODE, SILICON	81349	1N4004
F1	920930	FUSE, NORMAL BLO, 6A, 250V	75915	312.006
F2	920776	FUSE, SLO BLO, 1.25A, 250V	71400	MDX1-1/4
F3	920776	FUSE, SLO BLO, 1.25A, 250V	71400	MDX1-1/4
J3	601925	CONNECTOR, PCB, RECEPT, 3 ROW, 96P	52072	618008
J4	601925	CONNECTOR, PCB, RECEPT, 3 ROW, 96P	52072	618008
J5	601583-026	CONNECTOR, PCB, PLUG, 26 PIN	55322	TSW-113-08-G-D
J6	601583-026	CONNECTOR, PCB, PLUG, 26 PIN	55322	TSW-113-08-G-D
J9-J13	601731	CONNECTOR, PCB, PLUG, 16-PIN	52072	CA-D16-238-43
K1-K32	310197	RELAY, 2 FORM C	61529	TQ2E-24V
L1	100164	CAP, FEED-THRU,800PF, 50V	00779	842448-2
L2	310193	CHOKE, SHIELDED, 5UH	91637	IH-5-5-10
L3	310193	CHOKE, SHIELDED, 5UH	91637	IH-5-5-10
L4	100164	CAP, FEED-THRU,800PF, 50V	00779	842448-2
L5	600245	JUMPER, INSULATED	52210	L-2007-1
L6	600245	JUMPER, INSULATED	52210	L-2007-1
L7	100164	CAP, FEED-THRU,800PF, 50V	00779	842448-2
L8	310193	CHOKE, SHIELDED, 5UH	91637	IH-5-5-10
L9	100164	CAP, FEED-THRU,800PF, 50V	00779	842448-2
L10	310193	CHOKE, SHIELDED, 5UH	91637	IH-5-5-10
L11	100164	CAP, FEED-THRU,800PF, 50V	00779	842448-2
L12	310193	CHOKE, SHIELDED, 5UH	91637	IH-5-5-10
L13	100164	CAP, FEED-THRU,800PF, 50V	00779	842448-2
L14	310193	CHOKE, SHIELDED, 5UH	91637	IH-5-5-10
P1	601675-001	CONNECTOR, EUROCARD, 96 PIN (MODIFIED)	21793	601675-001
P2	601675-001	CONNECTOR, EUROCARD, 96 PIN (MODIFIED)	21793	601675-001
SW1-SW3	601969	SWITCH, DIP 6 POS, LOW PROFILE	65832	K406S
TP1	601197	POST, TEST, .025 SQ	00779	6-87022-6
TP2	601197	POST, TEST, .025 SQ	00779	6-87022-6
U1	231131	IC, DIGITAL, SHIFT REGISTER	18324	PC74HCT164D
U2	231130	IC, DIGITAL, FLIP FLOP	18324	PC74HC273
U3	231098	IC, SOIC TRANSISTOR	56289	ULN-2803LW
U4	231120	IC, 8-BIT, PARALLEL/SERIAL OUT S.R.	18324	74HCT166D
U5	231131	IC, DIGITAL, SHIFT REGISTER	18324	PC74HCT164D
U6	231130	IC, DIGITAL, FLIP FLOP	18324	PC74HC273
U7	231098	IC, SOIC TRANSISTOR	56289	ULN-2803LW
U8	231120	IC, 8-BIT, PARALLEL/SERIAL OUT S.R.	18324	74HCT166D
U9	231131	IC, DIGITAL, SHIFT REGISTER	18324	PC74HCT164D
U10	231130	IC, DIGITAL, FLIP FLOP	18324	PC74HC273
U11	231098	IC, SOIC TRANSISTOR	56289	ULN-2803LW
U12	231120	IC, 8-BIT, PARALLEL/SERIAL OUT S.R.	18324	74HCT166D
U13	231131	IC, DIGITAL, SHIFT REGISTER	18324	PC74HCT164D
U14	231130	IC, DIGITAL, FLIP FLOP	18324	PC74HC273
U15	231098	IC, SOIC TRANSISTOR	56289	ULN-2803LW
U16	231120	IC, 8-BIT, PARALLEL/SERIAL OUT S.R.	18324	74HCT166D
U17	231131	IC, DIGITAL, SHIFT REGISTER	18324	PC74HCT164D
U18	231130	IC, DIGITAL, FLIP FLOP	18324	PC74HC273
U19	231098	IC, SOIC TRANSISTOR	56289	ULN-2803LW
U20	231120	IC, 8-BIT, PARALLEL/SERIAL OUT S.R.	18324	74HCT166D
U21	231131	IC, DIGITAL, SHIFT REGISTER	18324	PC74HCT164D
U22	231130	IC, DIGITAL, FLIP FLOP	18324	PC74HC273

405056 PCB ASSY., 1260-64

REF DESIG	RACAL-DANA P/N	DESCRIPTION	FSC	MANUFACTURER'S P/N
U23	231098	IC, SOIC TRANSISTOR	56289	ULN-2803LW
U24	231120	IC, 8-BIT, PARALLEL/SERIAL OUT S.R.	18324	74HCT166D
U25	231131	IC, DIGITAL, SHIFT REGISTER	18324	PC74HCT164D
U26	231130	IC, DIGITAL, FLIP FLOP	18324	PC74HC273
U27	231098	IC, SOIC TRANSISTOR	56289	ULN-2803LW
U28	231120	IC, 8-BIT, PARALLEL/SERIAL OUT S.R.	18324	74HCT166D
U29	231131	IC, DIGITAL, SHIFT REGISTER	18324	PC74HCT164D
U30	231130	IC, DIGITAL, FLIP FLOP	18324	PC74HC273
U31	231098	IC, SOIC TRANSISTOR	56289	ULN-2803LW
U32	231120	IC, 8-BIT, PARALLEL/SERIAL OUT S.R.	18324	74HCT166D
U33	231131	IC, DIGITAL, SHIFT REGISTER	18324	PC74HCT164D
U34	231131	IC, DIGITAL, SHIFT REGISTER	18324	PC74HCT164D
U35	231120	IC, 8-BIT, PARALLEL/SERIAL OUT S.R.	18324	74HCT166D
U36	231152-001	IC, DIGITAL 16L8, PAL	21793	231152-001
U37	231147	IC, MULTIPLEXER	04713	74HC253D
U39	231147	IC, MULTIPLEXER	04713	74HC253D
U40	231096	IC, QUAD DIFF RECEIVER	01295	AM26LS32ACD
U41	231096	IC, QUAD DIFF RECEIVER	01295	AM26LS32ACD
U42	231125	IC, DIGITAL, LINE DRIVER	27014	DS26LS31MN
U43	231154	IC, PROGRAMMED PLA	21793	231154
U44	231153	IC, PROGRAMMED PLA	21793	231153
U45	231094	IC, DEMUX DECODER	18324	N74LS138D
U47	231135	IC, DIGITAL, 4-BIT COMPARATOR	18324	PC74HCT85D
U48	231093	IC, QUAD COMPARATOR	04713	LM339D
W3-W6	601731	CONNECTOR, PCB, PLUG, 16-PIN	52072	CA-D16-23B-43
W8	601731	CONNECTOR, PCB, PLUG, 16-PIN	52072	CA-D16-23B-43
W9	601731	CONNECTOR, PCB, PLUG, 16-PIN	52072	CA-D16-23B-43
W11	601731	CONNECTOR, PCB, PLUG, 16-PIN	52072	CA-D16-23B-43
W12	601731	CONNECTOR, PCB, PLUG, 16-PIN	52072	CA-D16-23B-43
Z1	080119	RES NETWORK, 220K	91637	SOMC-1603-224K
Z2	080117	RES NETWORK, 16P8R, 47K	73138	628-AL-473J
Z3	080119	RES NETWORK, 220K	91637	SOMC-1603-224K
Z4	080117	RES NETWORK, 16P8R, 47K	73138	628-AL-473J
Z5	080119	RES NETWORK, 220K	91637	SOMC-1603-224K
Z6	080117	RES NETWORK, 16P8R, 47K	73138	628-AL-473J
Z7	080119	RES NETWORK, 220K	91637	SOMC-1603-224K
Z8	080117	RES NETWORK, 16P8R, 47K	73138	628-AL-473J
Z9	080119	RES NETWORK, 220K	91637	SOMC-1603-224K
Z10	080117	RES NETWORK, 16P8R, 47K	73138	628-AL-473J
Z11	080119	RES NETWORK, 220K	91637	SOMC-1603-224K
Z12	080117	RES NETWORK, 16P8R, 47K	73138	628-AL-473J
Z13	080119	RES NETWORK, 220K	91637	SOMC-1603-224K
Z14	080117	RES NETWORK, 16P8R, 47K	73138	628-AL-473J
Z15	080119	RES NETWORK, 220K	91637	SOMC-1603-224K
Z16	080117	RES NETWORK, 16P8R, 47K	73138	628-AL-473J
Z17	080120	RES NETWORK, 10K	11236	767-161R10K
Z18	080114	RES NETWORK, 16P8R, 15K	73138	628-AL-153J
{43}1	401951	PCB ASSY., LBUS JUMPER	21793	401951
{44}1	401951-003	PCB ASSY., P3 JUMPER	21793	401951-003
{45}1	415056	PCB, 1260-64 (UNLOADED)	21793	415056
{48}A/R	500022	WIRE, BARE COPPER/TIN, 22 GA	21793	500022
{50}A/R	501376	TUBING, TEFLON, 20 GA, THIN WALL	29005	TW20GA
{55}4	611258-001	STANDOFF, SWAGE 4-40 X .170	06540	8091-11B-B-440-28
{56}2	611260	STANOFF, SWG, 4-40 X 1.138L	51506	51075HB105-1.138L
{79}6	920971	FUSE CLIP, PC MOUNT	75915	122088

405057 PCB ASSY., CONN INTFC, 1260-64

REF DESIG	RACAL-DANA P/N	DESCRIPTION	FSC	MANUFACTURER'S P/N
J1	602105	CABLE ASSY., PCB INTERFACE	21793	602105
J2	602105	CABLE ASSY., PCB INTERFACE	21793	602105
J200	601856-050	CONNECTOR, SMPL, PCB RECEPT	21793	601856-050
(1)1	415057	PCB, CONNECTOR INTERFACE, 1260-64 (UNLOADED)	21793	415057
(4)2	615014	SCREW, PPH, 2-56 X .250	-	-
(5)2	610980	WASHER, FLAT, #2 X .062	-	-
(10)A/R	522555	WIRE, TEFLON STRANDED, 18 GA, GRN	-	-
(13)A/R	920962	LOCTITE, 242, MED STR.	05972	272

405055 PCB ASSY., L-BUS BYPASS, 1260

REF DESIG	RACAL-DANA P/N	DESCRIPTION	FSC	MANUFACTURER'S P/N
P1	601675-001	CONNECTOR, EUROCARD, 96 PIN (MODIFIED)	21793	601675-001
P2	601675-001	CONNECTOR, EUROCARD, 96 PIN (MODIFIED)	21793	601675-001
P9	601511-012	CONNECTOR, RECEPT, 12-PIN	00779	2-530902-0
{1}1	415055	PCB, L-BUS BYPASS, 1260 (UNLOADED)	21793	415055
{5}A/R	500056	TUBING, SHRINK, CLR, 3/16 DIA	-	-
{6}A/R	523333	WIRE, TEFLON STRANDED, 22GA, ORG	-	-
{7}A/R	523888	WIRE, TEFLON STRANDED, 22GA, GRY	-	-
{10}4	611053	TERMINAL, CRIMP	00779	530553-2
{12}1	610777	CABLE TIE	16956	08-432
{13}2	610802	FASTENER, CHASSIS SWAGE, 4-40	88245	B1591B-11

List of Suppliers

FSC	SUPPLIER
00779	AMP INC. HARRISBURG, PA
01295	TEXAS INSTRUMENTS INC. DALLAS, TX
01526	GENICOM CORP. WAYNESBORO, VA
02735	RCA (SOLID STATE DIV.) SOMERVILLE, NEW JERSEY
03508	GENERAL ELECTRIC CO. (SEMI-CONDUCTOR PRODUCTS) AUBURN, NY
04713	MOTOROLA INC. (SEMICONDUCTOR PRODUCTS DIV) PHOENIX, AZ
05397	UNION CARBIDE CORP (MATERIALS SYSTEMS DIV) CLEVELAND, OHIO
05972	LOCTITE CORP HARTFORD, CONN
06383	PANDUIT CORP TINLEY PARK, CA
06540	AMATOM ELECTRONIC HARDWARE NEW ROCHELLE, NY
06776	ROBINSON NUGENT INC. NEW ALBANY, IN
07263	FAIRCHILD (SEMICONDUCTOR DIV.) MOUNTAIN VIEW, CA
08261	SPECTRA-STRIP CORP GARDEN GROVE, CA
11236	CTS OF BERNE INC. BERNE, INDIANA
16956	DENNISON MFG. CO. FRAMINGTON, MA
18324	SIGNETICS INC. SUNNYVALE, CA
21793	RACAL-DANA INSTRUMENTS INC. IRVINE, CA
22526	DUPONT CONNECTOR CO. NEW CUMBERLAND, PA
27014	NATIONAL SEMI-CONDUCTOR CORP. SANTA CLARA, CA
29005	STORM PRODUCTS CO. LOS ANGELES, CA
51506	ACCURATE SCREW MACHINE NUTLEY, NJ
52072	CIRCUIT ASSY. CORP. COSTA MESA, CA
52210	GETTING ENGRG & MFG. CO. SPRING MILLS, PA
53387	THREE (3) M CO. ST. PAUL, MN
55322	SAMTEC, INC. NEW ALBANY, IN
56289	SPAGUE ELECTRIC CO. N. ADAMS, MA
61529	AROMAT CORP. CUPERTINO, CA
62559	SCHROFF, INC. WARWICK, RI
65832	AMERICAN RESEARCH ENGRG ELGIN, IL
71400	BUSSMAN MFG.(DIV. MCGRAW EDISON CO.) ST. LOUIS, MO
73138	BECKMAN INSTRUMENTS FULLERTON, CA
75915	LITTELFUSE, INC. DES PLAINES, IL
78189	ILLINOIS TOOL WORKS, INC. (SHAKEPROOF, DIV.) ELGIN, IL
81349	MILITARY SPECIFICATION
83330	HERMAN H. SMITH, INC. BROOKLYN, NY
88245	LITTON PRECISION PRODUCTS VAN NUYS, CA
91637	DALE ELECTRONICS, INC. COLUMBUS, NEBRASKA
95275	VITRAMON, INC. BRIDGEPORT, CONNECTICUT
98291	SEALECTRO CORP. MAMARONECK, NY

RACAL-DANA Instruments Inc.

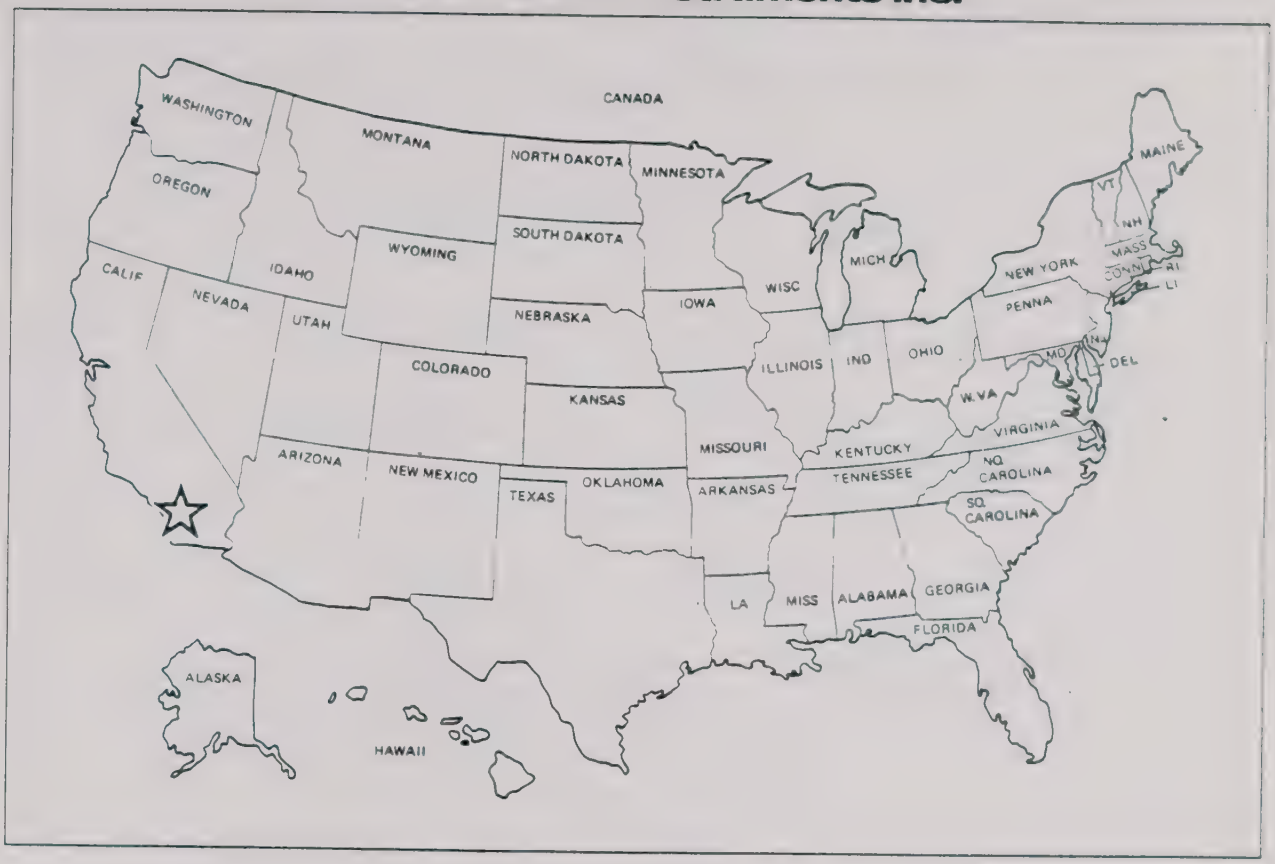

SALES, APPLICATIONS AND SERVICE SUPPORT

RACAL-DANA INSTRUMENTS INC.
4 Goodyear Street
Irvine, California 92718
Telephone: 1-800 RAC-DANA
(714) 859-8999 (In CA)
Fax: (714) 859-2505
TRT: 188715

INTERNATIONAL SERVICE CENTERS

Racal-Dana Instruments Ltd., Hardley Industrial Estate, Hythe, Southampton, Hampshire SO4 6ZH, England. (0703) 843265.Telex.47600
Racal-Dana Instruments S.A., 18 Avenue Dutartre, 78150 Le Chesnay, France (3) 955 88 88. Telex: 697215
Racal-Dana Instruments GmbH, Frankenforster Strasse 21, 5060 Bergisch Gladback 1, Federal Republic of Germany, 2204 60081 Telex 887 8428
Racal-Dana Instruments Italia srl, Via Mecenate 84/A, 20138 Milano, MI, Italy (02) 5062767/5052686/503444, Telex, 315697

RACAL-DANA Instruments Inc. *4 Goodyear Street, Irvine, California 92718-2202*

REPAIR AND CALIBRATION REQUEST FORM

To allow us to better understand your repair requests, we suggest you use the following outline when calling and include a copy with your instrument to be sent to the Racal-Dana Repair Facility.

Model No_____ Serial No_____ Date_____

Company Name_____ P.O. No_____

Billing Address_____

City State Zip

Shipping Address_____

City State Zip

Technical Contact_____ Phone Number (___)_____

Purchasing Contact_____ Phone Number (___)_____

1. Describe, in detail, the problem and symptoms you are having. Please include all set up details, such as input/output levels, frequencies, waveform details, etc.

_____

_____

_____

_____

2. If problem is occurring when unit is in remote, please list the program strings used and the controller type.

_____

_____

_____

3. Please give any additional information you feel would be beneficial in facilitating a faster repair time (i.e., modifications, etc.).

_____

_____

_____

4. Is calibration data required? Yes No (circle one)

Call for RMA No. before shipping: Customer Service
(714) 859-8999 x230 OR 1 (800) RAC-DANA

Ship instrument to: Customer Service Department
Racal-Dana Instruments Inc.
4 Goodyear Street
Irvine, CA 92718

Note: We do not accept "collect" shipments.

Benchmark
05102

MP MASTER
MA31080